CORDIVARI®

CALORIFIERS

THERMAL STORAGE

CATALOGUE 9

Cordivari company has a proven industrial tradition and is now one of the most important manufacturers in the heating and plumbing industry in Italy.
Founded in 1972 by Ercole Cordivari, the company is producing calorifiers, thermal storage and heating components, solar thermal systems, compressed air receivers, design radiators, chimney flues and food containers. Cordivari plants are situated on an area of 290.000 square meters and employ more than 500 employees.
Thanks to its development strategies, all addressed to the new technologies and to the training of new human resources, Cordivari is equipped with modern structures and advanced production processes. All the products are designed and produced in Italy and the technological, ergonomic and ecological choices allow to work respecting the human being and its environment. UNI EN ISO 14001 environment managing systems and UNI EN ISO 9001 Quality system are perfectly integrated to grant and ensure company's main goals and values.

The highly qualified management, the constant research for innovative solutions and the extremely customer-oriented company policy stand for the leading market position and the exclusive know-how in the field of integrated heating systems that the Cordivari group has acquired.
All this is the result of a continuous commitment to achieving Customer Satisfaction.


Cav. Ercole Cordivari


CORDIVARI







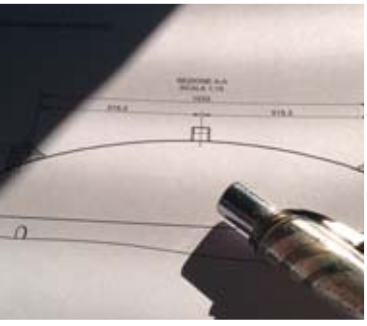






CORDIVARI



Technologies for Wellness

Development, design and innovation studies are key points in Cordivari production process. Each proposed solution conveys technical reliability, design, ergonomics, ease of use and installation. The continuous development of our product offer, wants to witness the company's attention to the market needs. Similarly, the research and development of new solutions follows the trends of an efficiency and energy savings oriented market.

The different phases of production are in perfect harmony with the best techniques for industrial automation, robotics and advanced craftsmanship.
Every product undergoes several times during the production stages, a rigorous control, manual and visual.

Cordivari products meet the most important certifications, such as the PED (Pressure Equipment Directive) and the Directive 2009/125/CE (ErP – eco-friendly planning regulations) in compliance with the cylinders and other pressure vessels manufactured. All items for Domestic Hot Water storage are certified for D.H.W. use in accordance with the strictest Italian and foreign regulations (SSICA, Attestation ACS, DVGW W270, WRAS).

In Cordivari quality care and attention to the environment has always been home. In fact we were the first company of the heating sector to obtain the certification according to UNI EN ISO 9001 integrated with environmental management certification UNI EN ISO 14001: 2015. This production philosophy, which is now a way of life for us, means reduction of emissions and energy inefficiencies, waste reduction and recycling over 60% and allows us to operate in a sustainable and environmentally friendly way, using clean energy from renewable sources, using only eco-friendly materials from raw materials to packaging.

CERTIFICATIONS

Sistema di Gestione Qualità UNI EN ISO 9001

Sistema di Gestione Ambientale UNI EN ISO 14001:2015

TÜV Rheinland Energie und Umwelt GmbH states that test procedures and Cordivari LAB are certified conforming to European standard EN 15332, as indicated by Ecodesign ErP Directive.

UNI EN ISO 9001-14001

PRODUCT CERTIFICATIONS

Italian Stainless Steel Association

2014/68/UE
2014/29/CE

ErP
Products in conformity to EUP Directive Energy Using Products-2009/125/UE

CERTIFICATES OF CONFORMITY

Internal treatment for food use Polywarm® in accordance with D.M. nr. 174 del 06/04/2004 granted by SSICA Laboratory of Parma - Italy.

D.H.W. Certification (Attestation de Conformité Sanitaire) granted by CARSO – Laboratoire Santé Environnement Hygiène De Lyon about Polywarm® anti-corrosion treatment

DVGW W270
on Polywarm® internal coating

Water Regulation Advisory Scheme certificate

Certificate of Conformity for Polywarm® according to NIZP - National Institute of Public Healt - Poland

Icons

Domestic Hot Water production (D.H.W.)

Heating Water Production

STOCK AVAILABILITY
Grey highlighted products are available on stock and can be dispatched in 1-5 working days.

Guide When Choosing A Calorifier

A calorifier is an indirect water heating appliance (i.e. one that features at least one heat exchanger) which accumulates heat so as to handle consumption rates that may vary greatly over a period of time, while also limiting the power used by the generators.

Cordivari offers a wide and varied range of calorifiers, thermal storage and heating components, to provide the most suitable product to any need and also allow simultaneous use of more energy sources.

Calorifiers with traditional boilers:
These products are designed for use with conventional boilers which use water as a heating medium in a sealed or open expansion circuit. The heat exchangers are designed to handle high flow rates on the primary side to ensure that the heat transfer will be efficient while at the same time avoiding excessively low return water temperatures.

Calorifiers with biomass boilers:
The selection of a calorifier while operating in conjunction with a biomass boiler must take account of fact that excessively low return water temperatures could reduce the lifespan of the boiler. In addition, a calorifier with a larger accumulation volume than normal will be more suitable as it will act as a buffer which will be beneficial to the biomass boiler.

Calorifiers with condensing boilers:
Condensing boilers are highly efficient and ecologically friendly. They operate at optimum performance when the flow water temperature is limited which results in the return water temperature being as low as possible. This will ensure that the latent heat is extracted out of the combustion products which will maximise the efficiency of the system.

Calorifiers with solar systems:
The heat exchange coil surface area is a critical issue when interfacing solar thermal systems with calorifiers due to limited primary flow rates and temperatures. The calorifier must also be capable of acting as a buffer to harness the solar energy throughout daylight hours.

Calorifiers with heat pumps:
Calorifiers operating in conjunction with air-to-water or water-to-water heat pumps must have extremely oversized heat exchange surface areas to ensure that heat exchange will take place even when there is a limited difference in temperature between the primary circuit and secondary stored water. This will maximise the COP (coefficiency of performance) of the heat pump.

Calorifiers with steam boilers:
The use of saturated steam as a heating medium to produce domestic hot water, although little used in the housing sector, is a solution which is still employed in industrial environments where the steam is already in use for the manufacturing process. Technically speaking, steam calorifiers are characterized by relatively small heat exchangers, as on one hand the steam gives high heat exchange coefficients and on the other hand the exchangers usually operate with considerable differences in temperature between the primary and secondary circuits. The use of steam demands a more stringent safety regeime than the use of low pressure hot water systems as steam boilers, depending on their capacity and design pressures, are classified as higher risk and therefore must comply with the European Pressure Equipment Directive.

Domestic hot water production (D.H.W.)

Calorifiers operating with more than one energy source
The demand to heat a calorifier using more than one energy source, while at the same time keeping the various circuits separate, has become much more common in recent times with the advent of renewable technologies which usually need to be backed-up with conventional boilers. In these cases, calorifiers with a number of heat exchangers are used with the design ensuring that excellent thermal stratification will be achieved with minimal interference between the various heat sources.

Calorifiers operating with renewable energies
D.H.W. production system connected to renewable energies, exploiting natural resources coming from air, water and ground.

Calorifiers operating with electrical power
Cordivari products designed for working with electricity can be connected to A/C power supply.
Combined with a renewable energy power supply system (fotovoltaic, wind energy, and so on), it allows to have an environmental friendly system.

Guide When Choosing Storage Tanks

Insulated storage are used in heating systems powered by discontinuous energy sources as biomass generator. It has the dual function of allowing the generator to operate in a regular manner, restricting the number of stoppages, and of creating a thermal stabiliser for the heating system, thus improving working comfort considerably.

Cordivari offers a wide range of storage tanks, which include both standard versions and a number of combined versions to be used as the same time as storage tank and to produce domestic hot water.

Central heating systems with one or more boilers which are plumbed together and do not generate domestic hot water.

Central heating systems with one or more boilers which are plumbed together in conjunction with solar power which is connected to either one or two coil type heat exchangers. Domestic hot water is not generated in these tanks.

Heating systems with one or more sources hydraulically divided, with the exploitation of the solar power and without DHW production.
These are heating systems powered by a biomass generator or more generators that are hydraulically divided.
The preparation of the DHW is done without involving the hot water storage tank.

Combined central heating system and domestic hot water production with one or more boilers which are plumbed together.

Combined central heating system and domestic hot water production with one or more boilers which are plumbed together.

Combined central heating system and domestic hot water production with one or more boilers which are plumbed together.

BOLLYTERM® HOME

Innovation, development, wellness, important points in the Cordivari production process, which are peculiar features also in the new BOLLYTERM® HOME, the water heater with integrated heat pump, which produces domestic hot water by exploiting the heat, which is naturally present in the air.The research and development of new solutions are in tune with the evolutionary trends of a market, oriented to the themes of efficiency and energy saving.

BOLLYTERM® HOME, with its energy class A, according to the Ecodesign Directive 2009/12/CE, allows great energy savings of up to 75% and therefore represents the right solution for a world, which is increasingly oriented towards energy saving and eco-sustainability.



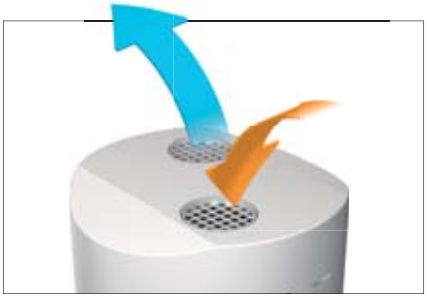



PRS MODULE

The PRS modules, are rapid sanitary hot water preparators, which are designed to operate in immediate (without accumulation) or semi-immediate (with accumulation) modus, in medium and large installations.The PRS modules are equipped with an electrical control panel with a programming unit, able to continuously detect the energy demand of the sanitary circuit; in addition, the control unit adjusts the operation of the pumps to the DHW demand and simultaneously manages the electric mixing valve on the primary circuit, so that the water passing through the plate exchanger does not reach excessive temperatures.In this way the exchanger is preserved from the formation of limescale, extending the useful life of the product and reduces the maintenance interventions.Furthermore, it is possible to integrate the PRS module with a data logger, that allows to record the data of the anti-legionella cycles on the micro SD card and the temperatures of the entire system.
The pumps on the primary circuit comply with the energy efficiency class A, which, together with the smart management of the control unit, allow a considerable energy saving.



PUFFERMAS® DOMUS

PUFFERMAS® DOMUS is the Cordivari compact calorifier for domestic use, suitable to be placed in rooms with limited space, thanks to its slim aesthetic shape.
The PUFFERMAS® DOMUS is suitable for any type of heat source and particularly suitable for use in combination with heat pumps.
The exchange module guarantees excellent performances even with low domestic hot water flow rates.
CHARACTERISTICS:
- Instant exchange system with stainless steel circuit to guarantee hygiene
- Electronic management of heat exchange with high sensibility and high flow rates (from 2 to 40 lt/min)
- Optimized internal stratification of the accumulation
- Available in version with heat exchanger for solar integration



WELLNESS and SAVING

Solutions for your Home



RADIATORS AND TOWEL RAILS



WATER TANKS



SOLAR THERMAL SYSTEMS



CALORIFIERS AND BUFFER TANKS



CORDIVARI DESIGN RADIATORS

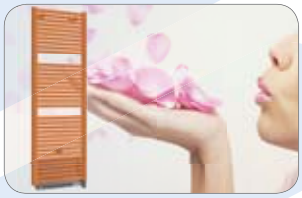

HIGH EFFICIENCY RADIATORS



FOOD CONTAINERS



CHIMNEY PIPES





CERTIFIED QUALITY

CHOOSE SERENITY



Today, more than ever, who choose Cordivari products choose to be peaceful!
By introducing the new Ecodesign ErP standards, we choose to offer you guaranteed performances and reliability.
The construction of the new building Cordivari LAB is the result of this choice. As from 2015, the company is equipped with a laboratory and an advanced test room which allow to test any product or system, measuring and certifying its performances. Thanks to its strict procedures, conformed to European standards, and sophisticated tools, nowadays Cordivari is the only Italian manufacturer able to carry out accurate tests on every product in its own laboratory. As a consequence, research and development on performance and energy efficiency are always running towards the best solutions, in order to guarantee you reliability, savings and high results.
Cordivari LAB is the only qualified laboratory inside a manufacturing company, approved by the TÜV.
Choose to be safe with certified quality!



CORDIVARI Lab

CORDIVARI S.r.l.
Zona Industriale Pagliare - 64020 MORRO D'ORO (TE) Italia
Tel. +39 085 80.40.1 r.a. - Fax UFF: CORRI. +39 085 80.40.458 - Fax CORRI. +39 085 8041200
C.F. - P. IVA - REG. IMPRESE TE N. 07 8070970673 - R.E.A. TE N. 92310 - CAP. SOC. € 6.000.000,00 i.v.
www.cordivari.it - info@cordivari.it

RAPPORTO DI PROVA

VERIFICA DISPERSIONE TERMICA AI FINI DELL'ETICHETTATURA ENERGETICA PREVISTA DAL REGOLAMENTO (UE) N. 814/2013 DELLA COMMISSIONE DEL 2 AGOSTO 2013 RECANTE MODALITÀ DI APPLICAZIONE DELLA DIRETTIVA 2009/125/CE DEL PARLAMENTO EUROPEO E DEL CONSIGLIO IN MERITO ALLE SPECIFICHE PER LA PROGETTAZIONE ECOCOMPATIBILE DEGLI SCALDACQUA E DEI SERBATOI PER L'ACQUA CALDA.

Rapporto di prova n°	BO-CLEN 02.15
Data di emissione	21/08/2015
N° di pagine totale	2
Laboratorio di prova	Cordivari LAB
Nome del richiedente	Cordivari srl
Specifiche di prova	EN15332:2007 5.4
Scopo della prova	Determinare la dispersione termica nelle condizioni previste dalla norma al fine di caratterizzare il prodotto oggetto della prova nell'ambito delle classi energetiche previste dal Regolamento UE 814/2013
Descrizione dell'oggetto in prova	Bollitore (preparatore di acqua calda ad uso igienico sanitario) ad accumulo con scambiatore di calore interno fisso. Materiale del corpo e dello scambiatore: acciaio al carbonio. Esecuzione cilindrica verticale, trattamento anticorrosivo delle membrature a contatto con l'acqua sanitaria e coibentazione in schiuma di poliuretano espanso realizzata " di corpo" sul bollitore.
Marchio	[illegible]
Costruttore	Cordivari SRL
Indirizzo costruttore	Zona Industriale Pagliare 64020 Morro D'Oro (TE) Italia
Modello	BOLLY 1 ST 200
Data del ricevimento oggetto in prova	09/08/2015
Periodo di prova	Dal 19 al 21 AGOSTO 2015

Questo rapporto non può essere riprodotto, se non integralmente, senza l'autorizzazione del laboratorio di prova che lo rilascia. I risultati esposti in questo rapporto di prova si riferiscono esclusivamente all'oggetto testato. Cordivari LAB non assume nessuna responsabilità per danni derivanti dall'interpretazione dei dati del presente documento riprodotto al di fuori del suo contesto.

0 Revisione	*P.I. Giovanni D'Egidio Esecutore Prod.*	*Ing. Ivan Bellini Direzione Tecnica*



EXAMPLE OF LABEL FOR TANK WITH HEAT PUMP

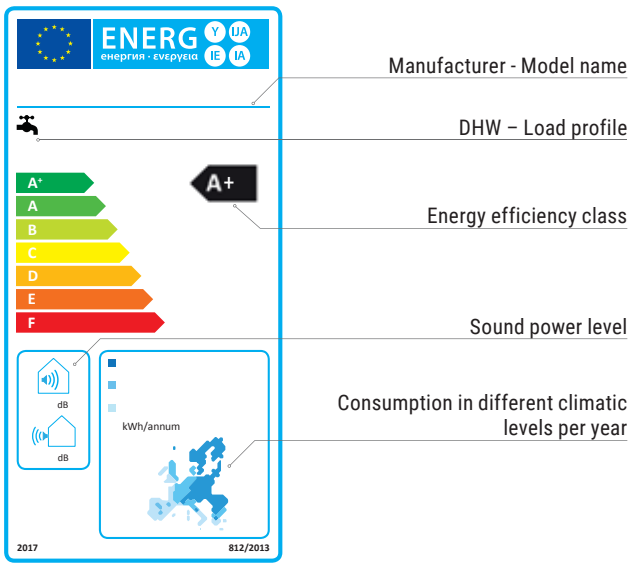

EXAMPLE OF LABEL FOR TANK/MULTI-HEAT ENERGY BUFFERS

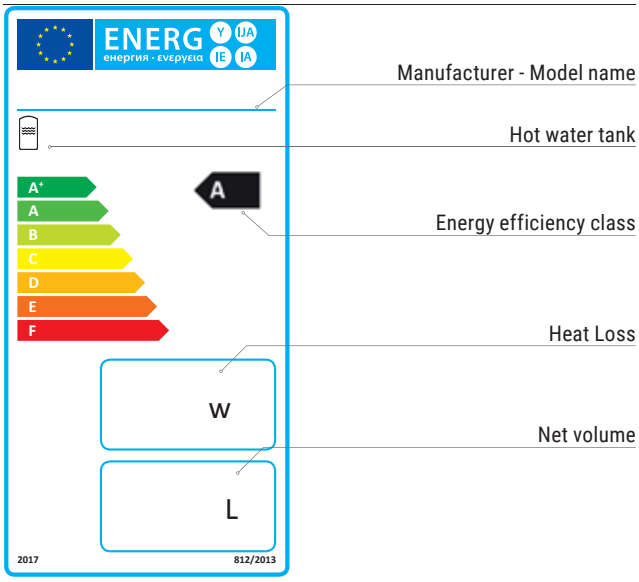

Index

EXTRA

	PAGE
• EXTRA 1 - 2 - 3	14
• EXTRA 1 COMPACT	18
• EXTRA 1 HORIZONTAL	36
• EXTRA 1 - 2 VAPORE	38
• EXTRA 1 - 2 - 3 PLUS	42



D.H.W. ACCUMULATION TANK

		PAGE
• VASO INERZIALE	NEW	56
• VASO INERZIALE A1 W		58
• VASO STORAGE 1-2-3	NEW	60
• VASO STORAGE COMPACT	NEW	66



BOLLYTERM® HEAT PUMP WATER HEATERS

			PAGE
• BOLLYTERM® HP	A+		120
• BOLLYTERM® HP 1	A+		122
• BOLLYTERM® HP 2	A+		124
• BOLLYTERM® HOME	A+	NEW	126

CALORIFIERS IN STAINLESS STEEL

		PAGE
• EXTRA 1 INOX - 2 INOX		132
• EXTRA 1 INOX COMPACT - 2 INOX COMPACT		136
• EXTRA 1 INOX VAPORE		140
• VASO INERZIALE INOX	NEW	142
• VASO INERZIALE INOX A1 X	NEW	144
• VASO INERZIALE INOX COMPACT	NEW	146

CALORIFIERS FOR HEAT PUMP

		PAGE
• BOLLY® 1-2-3 PDC		172
• BOLLY® 1 XL • BOLLY® 2 XL	NEW	180
• BOLLY® 1 XL INOX • BOLLY® 2 XL INOX		190
• BOLLY® HY	NEW	200
• PUFFERMAS® 1-2 DOMUS	NEW	202
• ECO COMBI 1-3 PDC		208





HYDRONIC

	PAGE
• INSPECTIONABLE PLATE EXCHANGERS PHC	274
• BRAZED PLATE EXCHANGERS SLB	280





PRESSURIZED WATER TANKS

	PAGE
• AUTOCLAVE ZINCATA PED	326
• AUTOCLAVE INOX PED - SC	328
• SERBATOI ZINCATI SC	330
• MEMBRANE EXPANSION VESSELS	332



COMPRESSED AIR RECEIVERS

	PAGE
• ARIA COMPRESSA SPVS	340
• ARIA COMPRESSA PED	342



BOLLY®

		PAGE
• BOLLY® 1-2 ST • BOLLY® 1-2 BC	NEW	76
• BOLLY® 1-2 AP		90
• BOLLY® 1-2 SLIM CLASSE A	A NEW	98
• BOLLY® 1-2 XL	NEW	102
• BOLLY® MURALE • BOLLY® PRIMO	NEW	106
• INTERKA • INTERKA SOLARE EVO		112







CALORIFIERS IN STAINLESS STEEL

	PAGE
• BOLLY® 1-2 ST INOX	148
• BOLLY® 1-2 XL INOX	158
• COMBI 1-2-3 INOX	162

BUFFER TANKS

		PAGE
• PUFFER	NEW	218
• PUFFER COMPACT		220
• PUFFER FLANGIATI	NEW	222
• PUFFER 1 - PUFFER 2		224
• PUFFER 1-CTS®		230

MULTIFUEL CYLINDERS

		PAGE
• COMBI 1-2-3		236
• ECO COMBI 1-2-3		244
• ECO COMBI 1-2 DOMUS		252
• PUFFERMAS® 1-2-3	NEW	256
• PUFFERMAS® 2-3 CTS	NEW	262
• PUFFERMAS® 2-3 CTS POWER	NEW	266



DHW IMMEDIATE SYSTEMS

		PAGE
• PIASTRATERM® SLB		284
• MACS® MODULES		286
• CASCADE MACS® SYSTEMS		288
• PRS MODULES	NEW	290
• OPEN ESXPANSION VESSELS		306



INERTIAL AND CHILLED WATER TANKS

		PAGE
• VOLANO TERMICO PDC PENSILE		310
• VOLANO TERMICO PDC		311
• VOLANO TERMICO PDC REVERSO		313
• VOLANO TERMICO CALDO/FREDDO	NEW	314
• VOLANO TERMICO POLYWARM®	NEW	315
• ACQUA REFRIGERATA INOX		317



TECHNICAL SUPPORT

	PAGE
• ACCESSORIES	346
• TECHNICAL SUPPORT	364
• EXAMPLES OF INSTALLATION	371
• CERTIFICATIONS	396
• SALES CONDITIONS	400



CORDIVARI®



EXTRA CALORIFIERS AND D.H.W. ACCUMULATION TANKS

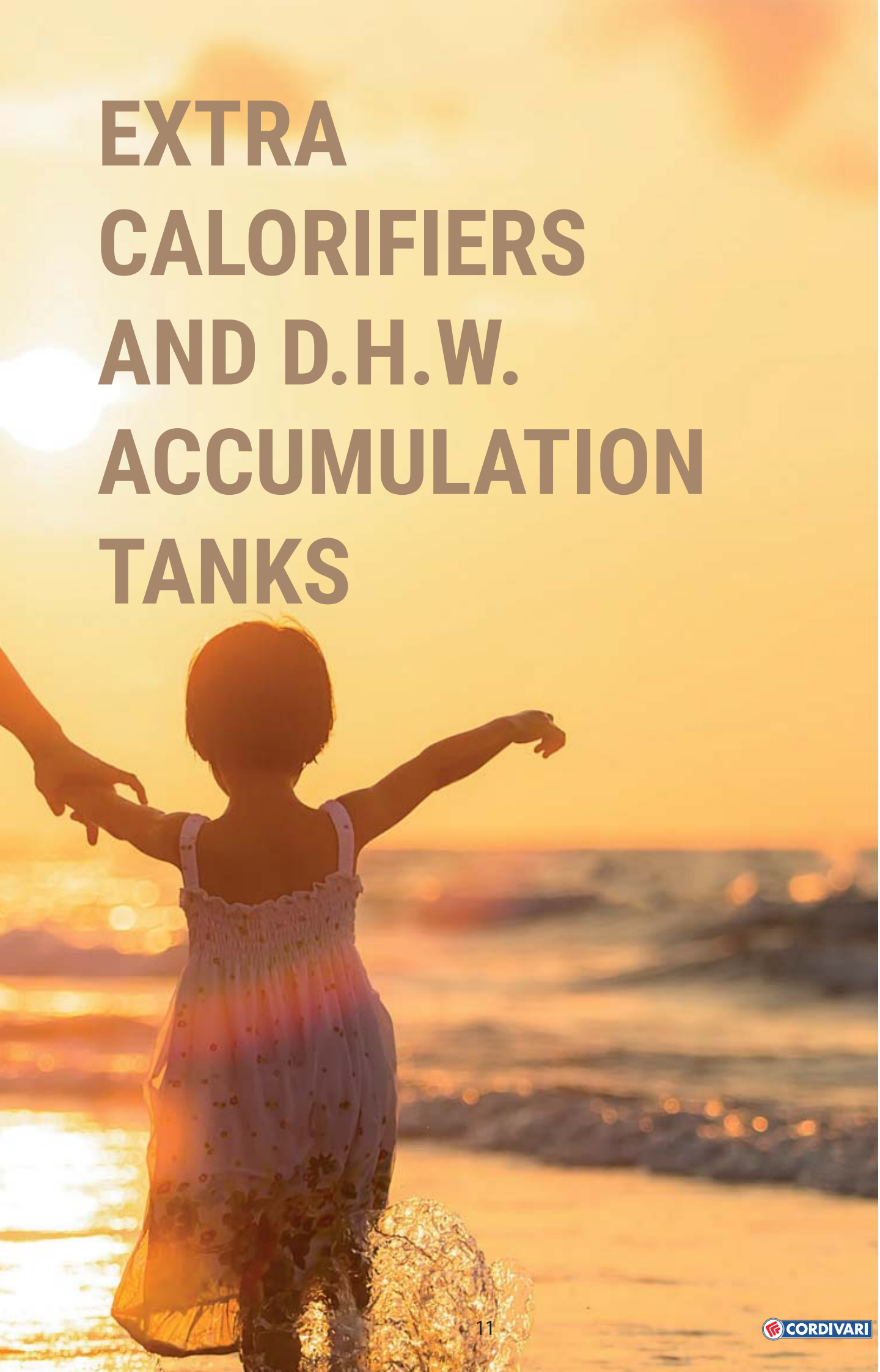

EXTRA CALORIFIERS RANGE

Domestic Hot Water production (D.H.W.)



EXTRA



EXTRA Compact



EXTRA Horizontal

Heat exchanger model	**STAINLESS STEEL 316L** extractable heat exchanger		
Number of heat exchangers			
Energy source			
Energy efficiency class	**B-C**	**C**	**C**
Insulation	- Polyurethane hard foam - Dismountable polyester fleece	- Dismountable polyester fleece	- Dismountable polyester fleece
Available range	200 ÷ 5000	1500 ÷ 4000	200 ÷ 5000
Installation	floor standing	floor standing	floor standing
Suggested Application	Traditional and solar installations	Traditional and solar installations with reduced height	Traditional and solar installations

	EXTRA Vapore	EXTRA Plus	VASO STORAGE	VASO Inerziale
				
	STAINLESS STEEL 316L extractable straight heat exchangers	Extractable straight double spiral copper finned heat exchangers	with mounting flange	--
				
			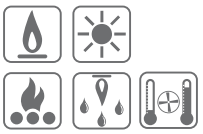	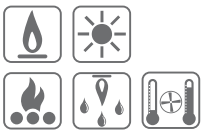
	B-C	**B-C**	**B-C**	**B-C**
	- Polyurethane hard foam - Dismountable polyester fleece	- Polyurethane hard foam - Dismountable polyester fleece	- Polyurethane hard foam - Dismountable polyester fleece - Fireproof class A1 insulation	- Polyurethane hard foam - Dismountable polyester fleece
	500 ÷ 5000	200 ÷ 5000	200 ÷ 5000	200 ÷ 5000
	floor standing	floor standing	floor standing	floor standing
	Industrial installations/ installations with steam generators	Solar, biomass and condensation installations	Traditional, solar, biomass and condensation installations	Traditional, solar, biomass and condensation installations

EXTRA **1 WX**

POLYWARM® COATED CALORIFIERS WITH 1 STAINLESS STEEL EXTRACTABLE HEAT EXCHANGER



APPLICATION
Production and storage of domestic hot water (DHW).
MATERIAL
Mild steel Polywarm® coated (Attestation ACS - SSICA - DVGW - W270 - WRAS)
HEAT EXCHANGER
Stainless steel 316L Antilegionella® heat exchanger, with tubes bent to the bottom
INSULATION
- HARD: High thermal insulation with ecological polyurethane hard foam.
- SOFT: NOFIRE® polyester fleece 100% made of recyclable material, with high thermal insulation. Fire resistance class B-s2d0 according to EN 13501.

Grey PVC external lining.

CATHODE PROTECTION
Magnesium anode. Models > 1500 n° 2 magnesium anodes.
DRAIN
External confluence through drain connection. Models > 1000 external confluence through drain pipe.
GASKET- FLANGE PLATE
Silicone gaskets suitable for water intended for human consumption (tested according to 98/83/CE), max temperature up to 200°C. Mild steel exchanger head with anticorrosion treatment.
WARRANTY
5 years - See general sales conditions and warranty
ACCESSORIES AND SPARE PARTS : See Accessories section for the entire list.



POLYWARM® COATED DHW STORAGE
316L STAINLESS STEEL HEAT EXCHANGER
HEATED STORAGE

STOCK AVAILABILITY



cordivari.com/erp



On line ErP label tool



EXTRA 1 WXB

Model	HARD FOAM insulation Art. Nr.	Stainless steel 316L heat exchanger surface [m²]	Energy efficiency class ErP
200	3072162360122	0,5	**B**
300	3072162360123	0,75	**C**
500	3072162360124	1	**C**
800	3072162360125	1,5	**B**
1000	3072162360126	2	**C**
1500	3072162360127	3	**C**
2000	3072162360128	4	**B**



EXTRA 1 WXC

Model	DISMOUNTABLE SOFT FLEECE insulation Art. Nr.	Stainless steel 316L heat exchanger surface [m²]	Energy efficiency class ErP
500	3072162360134	1	**C**
800	3072162360135	1,5	**C**
1000	3072162360136	2	**C**
1500	3072162360137	3	**C**
2000	3072162360138	4	**C**
2500	3072162360113	5	
3000	3072162360109	6	
4000	3072162360110	8	
5000	3072162360112	10	

ACCESSORIES

ELECTRIC IMMERSION HEATERS



Mod.	Heated volume by electric immersion heater [lt]	MONOPHASE 1,5 kW	MONOPHASE 2 kW	MONOPHASE 3 kW	THREEPHASE 4 kW	THREEPHASE 5 kW	THREEPHASE 6 kW	THREEPHASE 9 kW	THREEPHASE 12 kW
		5240000000051	5240000000052	5240000000053	5240000000047	5240000000048	5240000000049	5240000000050	5240000000031
		Ignition time from 10 °C to 45 °C with electric immersion heaters [min]			Ignition time from 10 °C to 45 °C with electric immersion heaters [min]				
200	49	87	65	44	//	//	//	//	//
300	76	136	102	68	//	//	//	//	//
500	127	228	171	114	//	//	//	//	//
800	178	318	239	159	//	//	//	//	//
1000	243	436	327	218	163	131	109	73	54
1500	288	516	387	258	194	155	129	86	65
2000	443	793	595	396	297	238	198	132	99
2500	577	1033	775	517	387	310	258	172	129
3000	577	1033	775	517	387	310	258	172	129
4000	797	1428	1071	714	535	428	357	238	178
5000	1040	1864	1398	932	699	559	466	311	233

"Easy Control" Electronic Display-mounted on tank

ART. NR.	FOR MODELS
5005000310002	WXC
5005000310003	WXB



Thermometer

Art. Nr.
5032240000107
5 units box



Titanium electronic anode

For Art. Nr. and prices please see Accessories section



P.E.D. product designed and produced in conformity to the article 4.3 of directive 2014/68/UE - ErP Ecodesgin directive 2009/125/CE

EXTRA **1 WX**

POLYWARM® COATED CALORIFIERS WITH 1 STAINLESS STEEL EXTRACTABLE HEAT EXCHANGER

	STORAGE		HEAT EXCHANGER	
Model	Pmax	Tmax	Pmax	Tmax
200 ÷ 1000	8 bar	90 °C	12 bar	110 °C
1500 ÷ 5000	6 bar			

CORDIVARI Lab

TÜV Rheinland Energie und Umwelt GmbH states that test procedures and Cordivari LAB are certified conforming to European standard EN 15332, as indicated by Ecodesign ErP Directive.

TESTED ErP

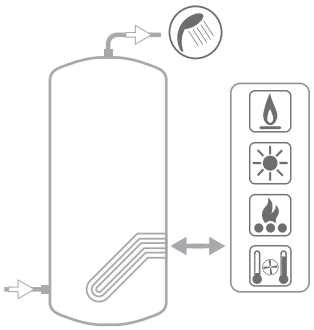

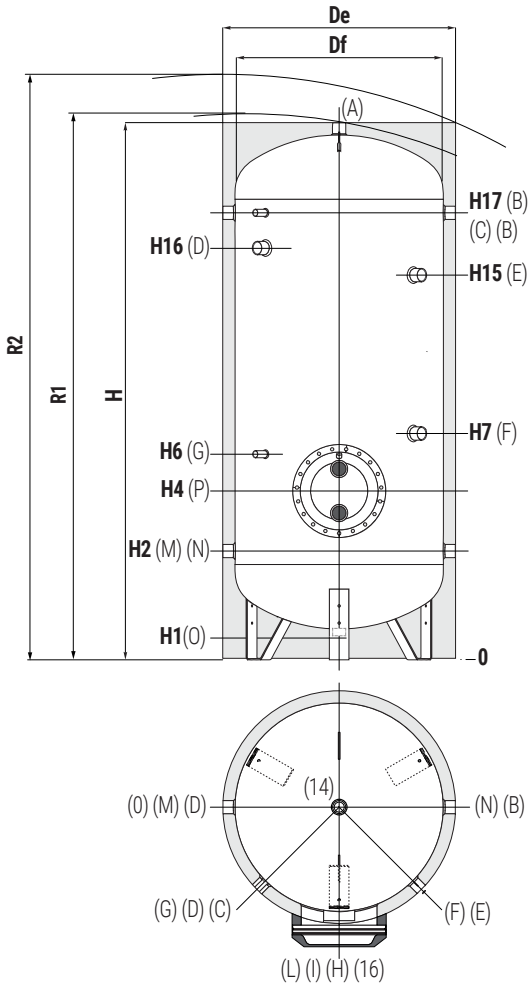

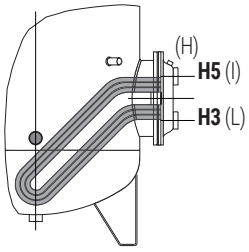

A	Domestic hot water outlet
B	Alternative domestic cold water circuit inlet or connection for more boilers
C	Connection for instrumentation 1/2" F
D	Connection for electric immersion heater 1"1/2 F. For models > 800 connection 2" F
E	Connection for 2nd magnesium anode 1"1/4 F (only for models > 1500)
F	Connection for magnesium anode 1" 1/4 F
G	Connection for instrumentation 1/2" F
H	Heat exchanger drain 3/8" F
I	Primary circuit inlet 1" F. For models > 500 connection 2" F
L	Primary circuit outlet 1" F. For models > 500 connection 2" F
M	Domestic cold water circuit inlet
N	Alternative domestic cold water circuit inlet or connection for more boilers
O	Drain 1" 1/4 F. For model 1000 conn. 1"1/2 F. For models > 1000 conn. 1" F
P	Heat exchanger flange

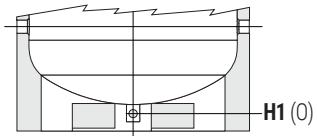

Models from 1500 to 5000 have two gripps on the bottom which allow the use of forklift when handling and drain pipe already fitted.

EXTRA 1 WXB - HARD FOAM INSULATION

Model	Volume	Weight	De	H	R2	H1	H2	H3	H4	H5	H6	H7	H15	H16	H17	P	B M-N	A
	[lt]	[kg]	[mm]														Connections F	
200	191	52	550	1449	1560	85	325	360	410	460	520	650	//	1075	1185	Øi220/Øe300	1"1/4	1"1/4
300	292	65	650	1499	1640	85	350	385	435	485	545	735	//	1100	1210	Øi220/Øe300	1"1/4	1"1/4
500	500	83	750	1800	1960	85	375	410	460	510	570	760	//	1329	1485	Øi220/Øe300	1"1/4	1"1/4
800	794	139	900	2135	2330	85	405	450	540	630	690	870	//	1610	1765	Øi300/Øe380	1"1/4	1"1/2
1000	1042	181	1000	2221	2450	105	458	503	593	683	743	993	//	1664	1818	Øi300/Øe380	1"1/2	2"
1500	1445	224	1100	2415	2660	109	440	585	675	765	825	1075	//	1895	2050	Øi300/Øe380	1"1/2	2"
2000	1978	279	1300	2492	2820	91	467	587	692	797	867	842	1952	1877	2057	Øi350/Øe430	2"	2"

EXTRA 1 WXC - DISMOUNTABLE SOFT FLEECE INSULATION

Model	Vol.	Weight	De	Df	H	R1	R2	H1	H2	H3	H4	H5	H6	H7	H15	H16	H17	P	B M-N	A
	[lt]	[kg]	[mm]																Conn.	F
500	500	90	870	650	1841	1998	2090	101	416	451	501	551	611	801	//	1370	1526	Øi220/Øe300	1"1/4	1"1/2
800	794	139	970	750	2188	2220	2400	113	433	478	568	658	718	898	//	1638	1793	Øi300/Øe380	1"1/4	1"1/2
1000	1042	181	1070	850	2242	2270	2490	101	454	499	589	679	739	989	//	1660	1814	Øi300/Øe380	1"1/2	2"
1500	1445	224	1210	950	2440	2495	2730	109	440	585	675	765	825	1075	//	1895	2050	Øi300/Øe380	1"1/2	2"
2000	1978	279	1360	1100	2492	2570	2850	91	467	587	692	797	867	842	1952	1877	2057	Øi350/Øe430	2"	2"
2500	2315	328	1350	1250	2311	2480	2690	140	551	671	776	881	951	976	1816	1732	1891	Øi350/Øe430	2"	2"
3000	2921	384	1350	1250	2811	2950	3130	140	551	731	836	941	1011	1036	2316	2232	2391	Øi350/Øe430	2"	2"
4000	3769	521	1500	1400	2875	3050	3250	114	570	750	855	960	1030	1035	2315	2238	2410	Øi350/Øe430	2"	2"
5000	4982	657	1700	1600	2915	3130	3380	94	580	750	855	960	1030	1035	2335	2265	2420	Øi350/Øe430	2"	2"

P.E.D. product designed and produced in conformity to the article 4.3 of directive 2014/68/UE - ErP Ecodesgin directive 2009/125/CE

CORDIVARI

EXTRA **1 WX**
HEAT EXCHANGERS TECHNICAL DATA



Cordivari heat exchangers, with tubes bent to the bottom, are able to heat the complete volume in an homogeneus way.
Energy storaging is therefore improved and ignition time data have to be referred to the complete volume of the tank, while in traditional straight heat exchangers equipped calorifires, a range between 9-17% of volume remains cold.

Model	Primary Flow rate	Ignition time (minutes) from 10 °C to t2 and primary at T1				Maximum power exchange (kW) with primary at T1, secondary within 10-45 °C and constant use of DHW production				DHW continuous production lt/h within 10-45 °C and primary at T1			
	[m³/h]	T1/t2				T1				T1			
		55/50	65/60	70/60	80/60	55	65	70	80	55	65	70	80
200	2	113	113	77	49	7,3	11,5	13,7	18	178	283	338	455
	1	147	148	102	65	5,8	8,9	10,5	13,9	141	218	258	344
300	3	112	113	76	48	11,1	17	21	28	274	435	520	701
	1,5	145	146	102	65	8,9	13,8	16,3	21,6	219	339	402	534
500	4	139	140	96	60	15	23,8	28,5	38	369	587	702	947
	2	180	181	125	80	12,1	18,7	22,1	29,4	297	460	545	725
800	6	146	147	101	64	23	36	44	59	570	908	1087	1465
	3	186	188	130	83	18	29	34	46	465	721	854	1136
1000	10	128	128	86	54	33	53	63	86	814	1309	1571	2127
	5	157	157	107,9	69	27	43	51	69	687	1077	1281	1711
1500	15	120	119	82	51	51	81	98	133	1256	2022	2428	3290
	7,5	145	146	100	64	44	68	81	108	1075	1687	2008	2684
2000	20	121	122	83	52	69	111	133	180	1699	2738	3288	4453
	10	146	147	101	65	59	93	111	148	1465	2302	2741	3665
2500	20	118	119	81	51	84	134	160	216	2066	3309	3964	5352
	10	145	146	101	65	71	111	131	174	1755	2734	3244	4314
3000	20	128	127	87	55	100	159	190	255	2461	3926	4694	6321
	10	456	157	110	70	84	130	154	204	2082	3224	3817	5053
4000	20	126	127	87	56	131	207	247	330	3236	5121	6105	8168
	10	159	161	112	73	110	168	198	260	2718	4151	4903	6443
5000	20	137	138	96	61	162	253	301	401	3992	6270	7450	9921
	10	176	179	125	82	135	204	239	312	3332	5049	5923	7727

LOWER
HEAT EXCHANGER

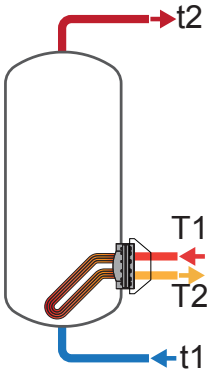

Model	Primary Flow rate	DHW produced in the first 10 minutes in lt/10' input 10 °C output 45 °C, storage at t2 and primary at T1				DHW produced in the first hour in lt/60' input 10 °C output 45 °C, storage at t2 and primary at T1				Heat exchanger pressure loss	
	[m³/h]	T1/t2				T1/t2				[mm H_2O]	[mbar]
		55/50	65/60	70/60	80/60	55/50	65/60	70/60	80/60		
200	2	247	319	328	347	360	498	542	635	309	30,3
	1	241	308	314	329	330	446	478	547	84,74	8,3
300	3	371	480	494	524	545	755	823	968	372	36,5
	1,5	362	464	474	496	501	678	729	834	101,02	9,9
500	4	616	791	810	851	849	1162	1254	1450	419	41,1
	2	604	770	784	814	792	1061	1129	1273	113,381	11,1
800	6	998	1280	1310	1373	1359	1855	1998	2301	718	70,4
	3	980	1249	1271	1318	1275	1705	1812	2037	189,22	18,6
1000	10	1273	1640	1683	1776	1788	2469	2678	3123	1380	135,3
	5	1252	1601	1635	1707	1687	2283	2446	2790	358,5	35,2
1500	15	1855	2394	2462	2605	2651	3675	4000	4689	2295	225,1
	7,5	1825	2338	2392	2504	2506	3407	3664	4204	589,6	57,8
2000	20	2546	3285	3377	3571	3622	5019	5459	6391	2996	293,8
	10	2507	3212	3285	3439	3435	4670	5021	5761	766,42	75,2
2500	20	2988	3856	3965	4196	4296	5951	6475	7586	2436	238,9
	10	2936	3760	3845	4023	4047	5491	5899	6755	624	61,2
3000	20	3748	4827	4955	5226	5307	7314	7928	9230	2836	278,1
	10	3685	4710	4809	5015	5004	6752	7226	8215	723	70,9
4000	20	4842	6232	6396	6740	6892	9475	10263	11913	3896	382,1
	10	4756	6070	6196	6452	6477	8699	9301	10533	989	97,0
5000	20	6362	8166	8363	8775	8891	12137	13081	15058	4707	461,6
	10	6252	7963	8109	8409	8363	11161	11860	13303	1192	116,9

INCREASED STORAGE CAPACITY OF CURVED ANTILEGIONELLA® HEAT EXCHANGER



Model	Storage volume: Standard heat exchanger	Storage volume: Heat exchanger for 100% heated volume	Advantage in storaged volume	Advantage in percentage
	[lt]	[lt]	[lt]	[%]
200	165	190	25	**13%**
300	251	285	34	**12%**
500	438	485	47	**10%**
800	694	790	96	**12%**
1000	907	995	88	**9%**



Model	Storage volume: Standard heat exchanger	Storage volume: Heat exchanger for 100% heated volume	Advantage in storaged volume	Advantage in percentage
	[lt]	[lt]	[lt]	[%]
1500	1224	1445	221	**15%**
2000	1684	1978	294	**15%**
2500	1905	2315	410	**18%**
3000	2438	2921	483	**17%**
4000	3113	3769	656	**17%**
5000	4116	4982	866	**17%**

EXTRA **1 WX**

HEAT EXCHANGERS PRESSURE LOSS



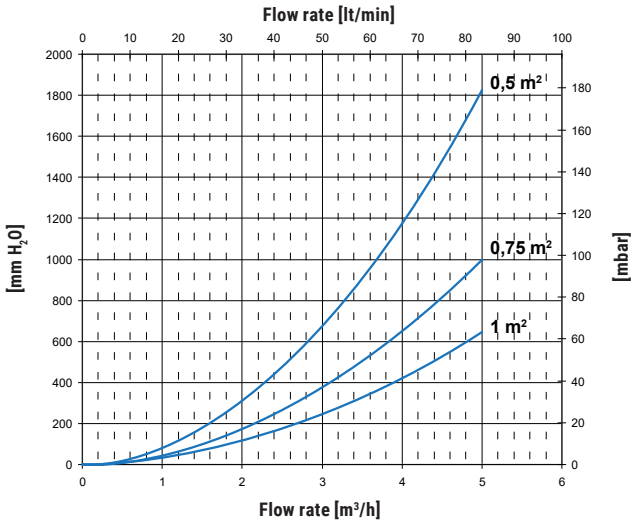

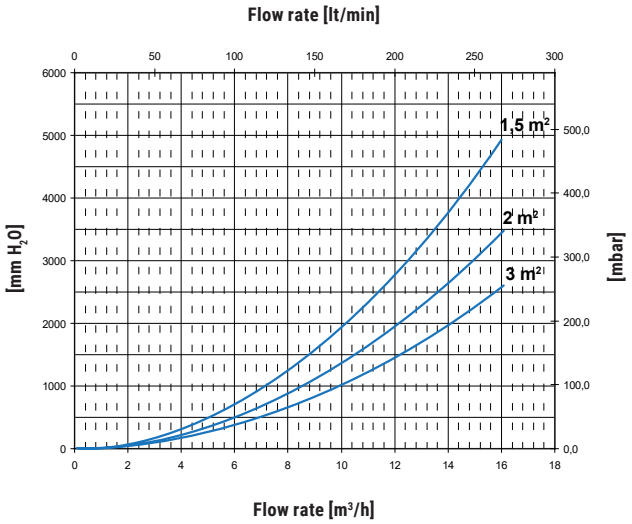

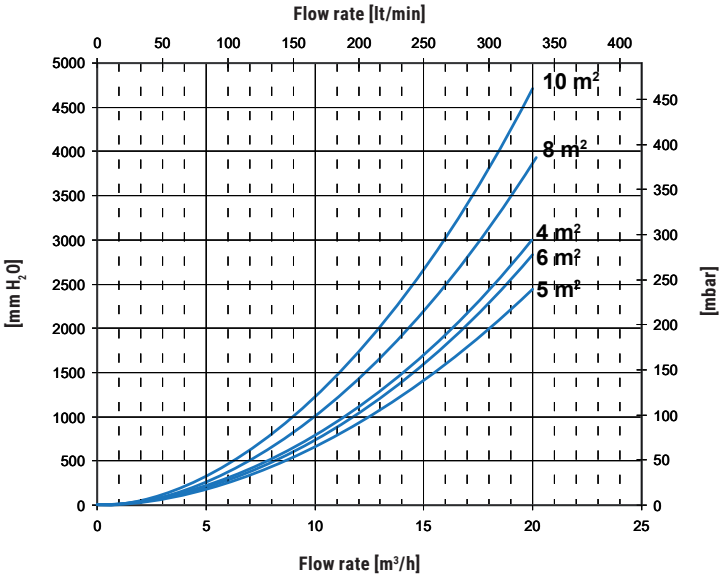

EXAMPLE OF INSTALLATION WITH **EXTRA 1**

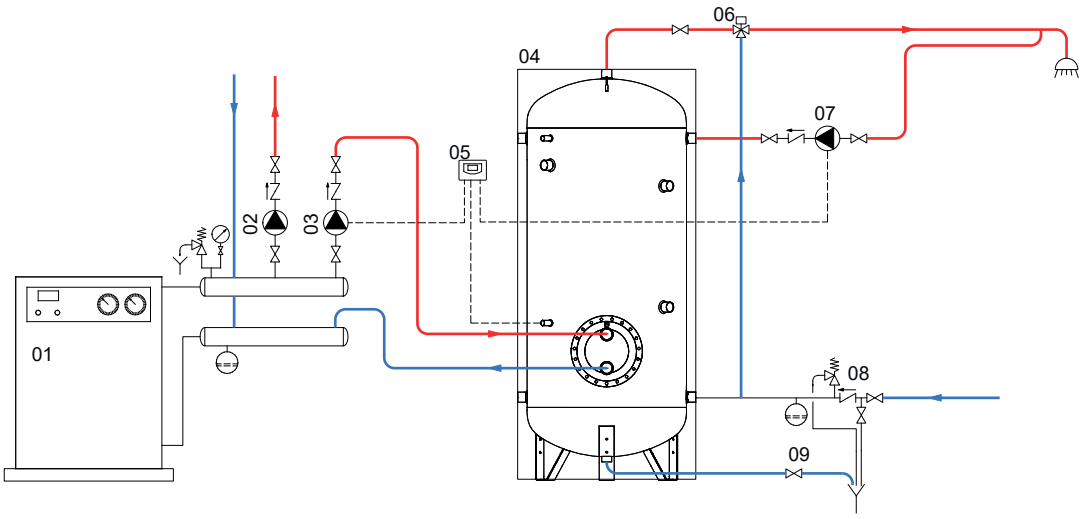

1	Generator	4	EXTRA 1	7	DHW recirculation group
2	Heating system circulation group	5	Easy Control electronic display/ thermostat	8	Hydraulic safety group
3	D.H.W. circulation group	6	Thermostatic mixing valve	9	Blowdown valve

EXTRA **1 COMPACT**

POLYWARM® COATED CALORIFIERS WITH 1 STAINLESS STEEL EXTRACTABLE HEAT EXCHANGER



APPLICATION
Production and storage of domestic hot water (DHW).
MATERIAL
Mild steel Polywarm® coated (Attestation ACS - SSICA - DVGW - W270 - WRAS)
HEAT EXCHANGER
Stainless steel 316L Antilegionella® heat exchanger, with tubes bent to the bottom
INSULATION (DISMOUNTABLE)
NOFIRE® polyester fleece 100% made of recyclable material, with high thermal insulation. Fire resistance class B-s2d0 according to EN 13501.
Grey PVC external lining.

CATHODE PROTECTION
N° 2 magnesium anodes.
DRAIN
External confluence through drain connection.
GASKET- FLANGE PLATE
Silicone gaskets suitable for water intended for human consumption (tested according to 98/83/CE), max temperature up to 200°C. Mild steel exchanger head with anticorrosion treatment.
WARRANTY
5 years - See general sales conditions and warranty
ACCESSORIES AND SPARE PARTS
See Accessories section for the entire list.


POLYWARM® COATED DHW STORAGE



316L STAINLESS STEEL HEAT EXCHANGER



HEATED STORAGE



EXTRA 1 COMPACT WXC

Model	DISMOUNTABLE SOFT FLEECE insulation Art. Nr.	STAINLESS STEEL 316L HEAT EXCHANGER SURFACE [m²]	ENERGY EFFICIENCY CLASS
1500	3072162360537	3	C
2000	3072162360538	4	C
2500	3072162360513	5	
3000	3072162360509	6	
4000	3072162360510	8	



cordivari.com/erp



On line ErP label tool

ACCESSORIES

ELECTRIC IMMERSION HEATERS



Mod.	Heated volume by electric immersion heater [lt]	MONOPHASE 1,5 kW	2 kW	3 kW	THREEPHASE 4 kW	5 kW	6 kW	9 kW	12 kW
		5240000000051	5240000000052	5240000000053	5240000000047	5240000000048	5240000000049	5240000000050	5240000000031
		Ignition time from 10 °C to 45 °C with electric immersion heaters [min]			Ignition time from 10 °C to 45 °C with electric immersion heaters [min]				
1500	443	793	595	396	297	238	198	132	99
2000	577	1033	775	517	387	310	258	172	129
2500	797	1428	1071	714	535	428	357	238	178
3000	874	1565	1173	782	587	469	391	261	196
4000	924	1655	1241	828	621	497	414	276	207

"Easy Control" Electronic Display-mounted on tank

ART. NR.	FOR MODELS
5005000310002	WXC



Thermometer

Art. Nr.
5032240000107
5 units box



Titanium electronic anode

Art. Nr.	Model
5200000000011	1500
5200000000013	2000÷4000



P.E.D. product designed and produced in conformity to the article 4.3 of directive 2014/68/UE - ErP Ecodesgin directive 2009/125/CE

EXTRA **1 COMPACT**

POLYWARM® COATED CALORIFIERS WITH 1 STAINLESS STEEL EXTRACTABLE HEAT EXCHANGER

STORAGE		HEAT EXCHANGER	
Pmax	Tmax	Pmax	Tmax
6 bar	90 °C	12 bar	110 °C

CORDIVARI Lab

TÜV Rheinland Energie und Umwelt GmbH states that test procedures and Cordivari LAB are certified conforming to European standard EN 15332, as indicated by Ecodesign ErP Directive.

TESTED ErP

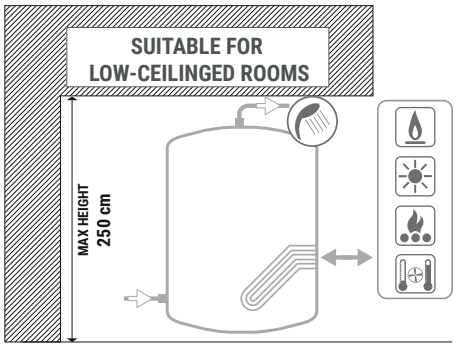

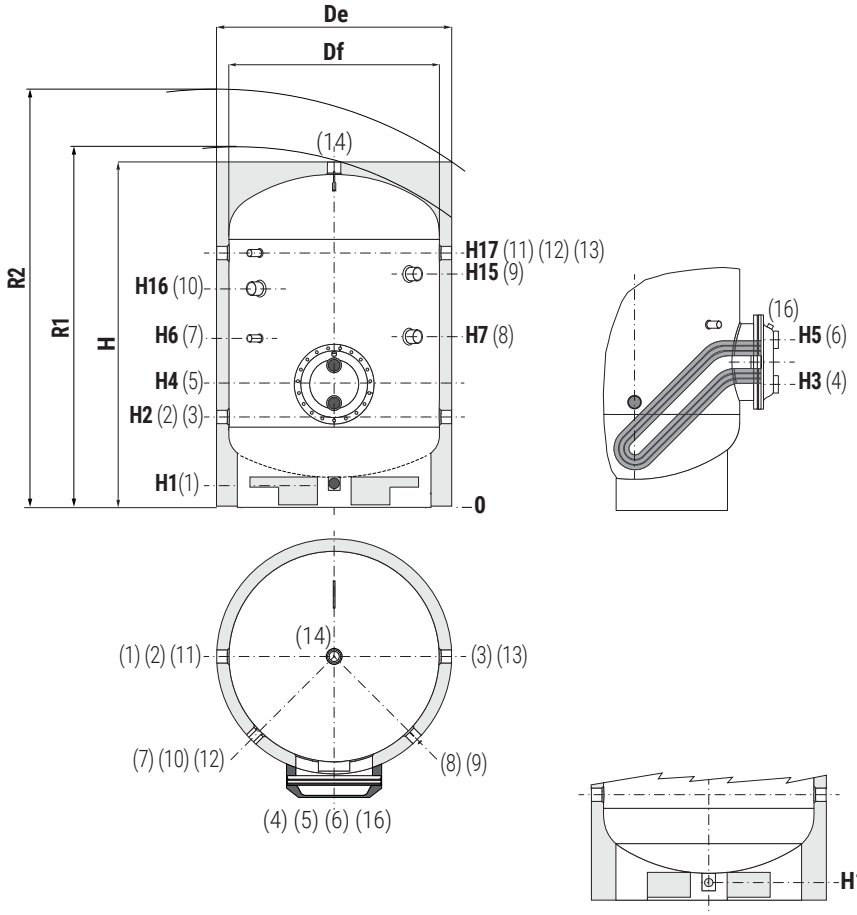

1	Drain 1" F
2	Domestic cold water circuit inlet
3	Alternative domestic cold water circuit inlet or connection for more boilers
4	Primary circuit outlet
5	Heat exchanger flange
6	Primary circuit inlet
7	Connection for instrumentation 1/2" F
8	Connection for magnesium anode 1"1/4 F
9	Connection for 2nd magnesium anode 1"1/4 F (only for models > 1500)
10	Connection for electric immersion heater
11 13	Recirculation / Domestic hot water outlet
12	Connection for instrumentation 1/2" F
14	Domestic hot water outlet 2" F
16	Heat exchanger drain 3/8" F

The calorifier has two gripps on the bottom which allows the use of forklift when handling and already equipped with mounted drainage tube.

Model	Volume	Weight	De	Df	H	R1	R2	H1	H2	H3	H4	H5
	[lt]	[kg]	[mm]									
1500	1509	221	1360	1100	1992	2104	2420	91	467	602	692	782
2000	2012	300	1510	1250	2111	2251	2610	140	551	671	776	881
2500	2627	393	1500	1400	2125	2363	2610	114	570	690	795	900
3000	3029	472	1600	1500	2140	2410	2680	109	575	695	800	905
4000	3990	565	1700	1600	2415	2678	2960	94	580	730	835	940

Model	H6	H7	H15	H16	H17	5	2-3 11-13	4-6	7-12	8	9
	[mm]						Connections F				
1500	867	942	//	1377	1557	Øi300/Øe380	2"	2"	1/2"	1"1/4	//
2000	951	976	1566	1482	1641	Øi350/Øe430	2"	2"	1/2"	1"1/4	1"1/4
2500	970	975	1585	1488	1660	Øi350/Øe430	2"	2"	1/2"	1"1/4	1"1/4
3000	975	980	1600	1520	1675	Øi350/Øe430	2"	2"	1/2"	1"1/4	1"1/4
4000	1010	1015	1855	1765	1920	Øi350/Øe430	2"	2"	1/2"	1"1/4	1"1/4

P.E.D. product designed and produced in conformity to the article 4.3 of directive 2014/68/UE - ErP Ecodesgin directive 2009/125/CE

CORDIVARI

EXTRA **1 COMPACT**

HEAT EXCHANGERS TECHNICAL DATA



Cordivari heat exchangers, with tubes bent to the bottom, are able to heat the complete volume in an homogeneus way.
Energy storaging is therefore improved and ignition time data have to be referred to the complete volume of the tank, while in traditional straight heat exchangers equipped calorifires, a range between 9-17% of volume remains cold.

Model	Primary Flow rate	Ignition time (minutes) from 10 °C to t2 and primary at T1				Maximum power exchange (kW) with primary at T1, secondary within 10-45 °C and constant use of DHW production				DHW continuous production lt/h within 10-45 °C and primary at T1			
	[m³/h]	T1/t2				T1				T1			
		55/50	65/60	70/60	80/60	55	65	70	80	55	65	70	80
1500	15	125	125	85	54	51	81	98	133	1256	2022	2428	3290
	7,5	152	152	105	67	44	68	81	108	1075	1687	2008	2684
2000	20	123	123	84	53	69	111	133	180	1699	2738	3288	4453
	10	148	148	103	65	59	93	111	148	1465	2302	2741	3665
2500	20	134	134	92	58	69	111	133	180	1699	2738	3288	4453
	10	164	164	114	73	59	93	111	148	1465	2302	2741	3665
3000	20	130	130	90	57	100	159	190	255	2461	3926	4694	6321
	10	162	162	113	73	84	130	154	204	2082	3224	3817	5053
4000	20	133	133	92	59	131	207	247	330	3236	5121	6105	8168
	10	170	170	119	77	110	168	198	260	2718	4151	4903	6443

LOWER
HEAT EXCHANGER

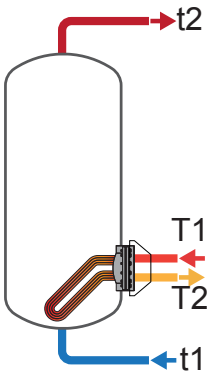

Model	Primary Flow rate	DHW produced in the first 10 minutes in lt/10' input 10 °C output 45 °C, storage at t2 and primary at T1				DHW produced in the first hour in lt/60' input 10 °C output 45 °C, storage at t2 and primary at T1				Heat exchanger pressure loss	
	[m³/h]	T1/t2				T1/t2				[mm H_2O]	[mbar]
		55/50	65/60	70/60	80/60	55/50	65/60	70/60	80/60		
1500	15	1927	2484	2552	2695	2723	3765	4090	4779	2295	225,1
	7,5	1897	2428	2482	2594	2578	3497	3754	4294	589,6	57,8
2000	20	2573	3319	3411	3605	3649	5053	5493	6425	2996	293,8
	10	2534	3247	3320	3474	3462	4704	5056	5795	766,42	75,2
2500	20	3276	4198	4289	4484	4352	5932	6372	7304	2436	238,9
	10	3237	4125	4198	4352	4165	5583	5934	6673	624	61,2
3000	20	3862	4969	5097	5368	5420	7455	8069	9371	2836	278,1
	10	3798	4852	4950	5156	5117	6893	7368	8357	723	70,9
4000	20	5090	6542	6706	7050	7140	9785	10573	12223	3896	382,1
	10	5004	6380	6506	6762	6725	9009	9611	10843	989	97,0

INCREASED STORAGE CAPACITY OF CURVED ANTILEGIONELLA® HEAT EXCHANGER





Model	Storage volume: Standard heat exchanger	Storage volume: Heat exchanger for 100% heated volume	Advantage in storaged volume	Advantage in percentage
	[lt]	[lt]	[lt]	[%]
1500	1224	1445	221	**15%**
2000	1684	1978	294	**15%**
2500	1905	2315	410	**18%**
3000	2438	2921	483	**17%**
4000	3113	3769	656	**17%**

EXTRA **1 COMPACT**

HEAT EXCHANGERS PRESSURE LOSS



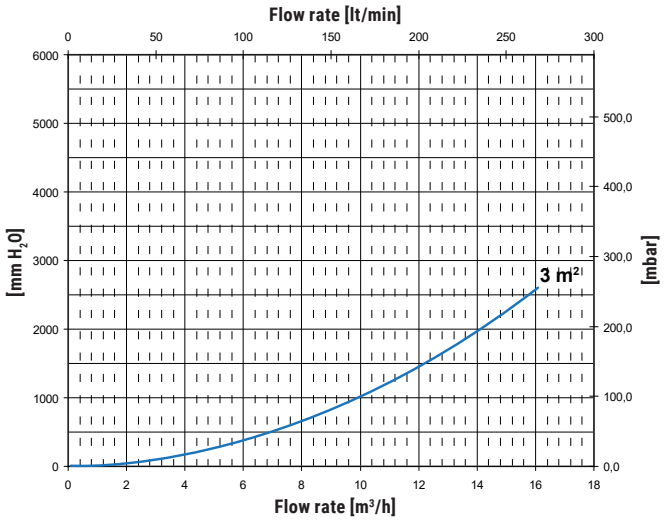

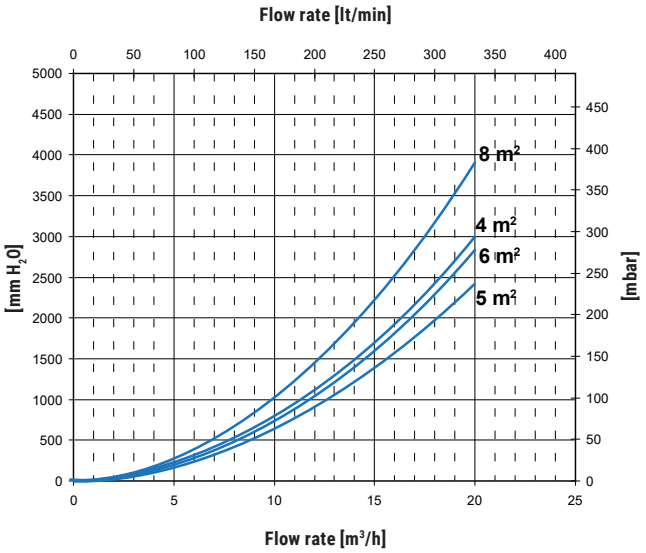

EXAMPLE OF INSTALLATION WITH **EXTRA 1 COMPACT**

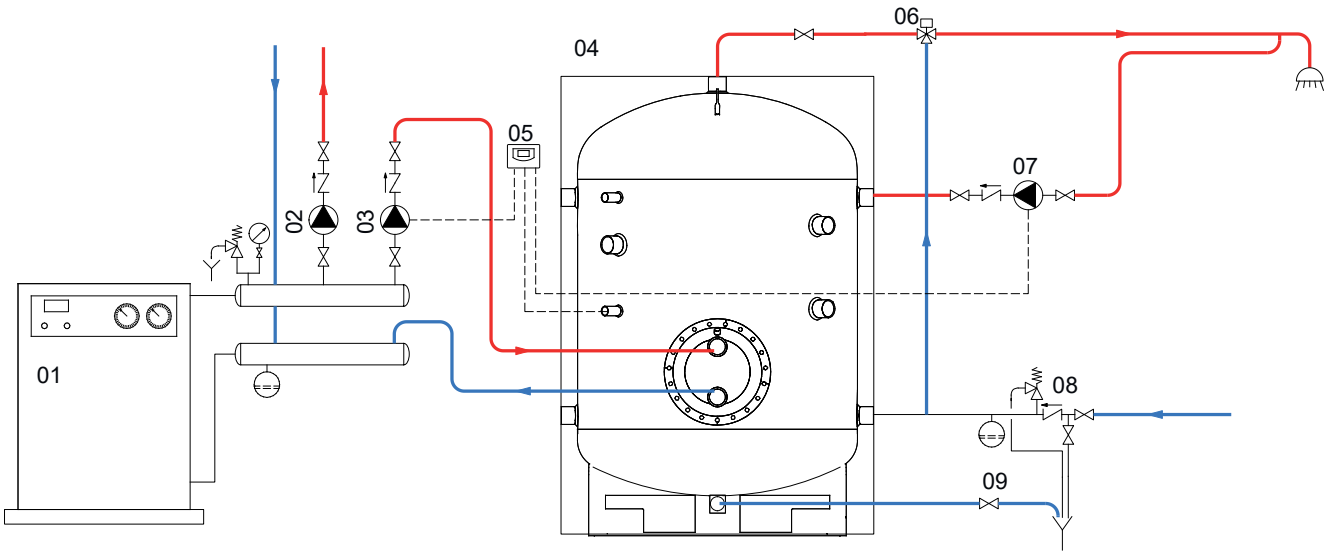

01	Generator	04	EXTRA 1 COMPACT	07	D.H.W. recirculation group
02	Heating system circulation group	05	Easy Control electronic display/ thermostat	08	Hydraulic safety group
03	D.H.W. circulation group	06	Thermostatic mixing valve	09	Blowdown valve

EXTRA **1 WX /** EXTRA **1 COMPACT**

HEAT EXCHANGERS TECHNICAL DATA

Heat Exchanger output referred to temperature and flow rate of primary circuit and with secondary at 10/45°C at maximum withdrawal of producible DHW (Upper limit of the curves referred to maximum primary flow rate in the heat exchanger, while the lower limit in the curves refer to the minimum primary flow rate)



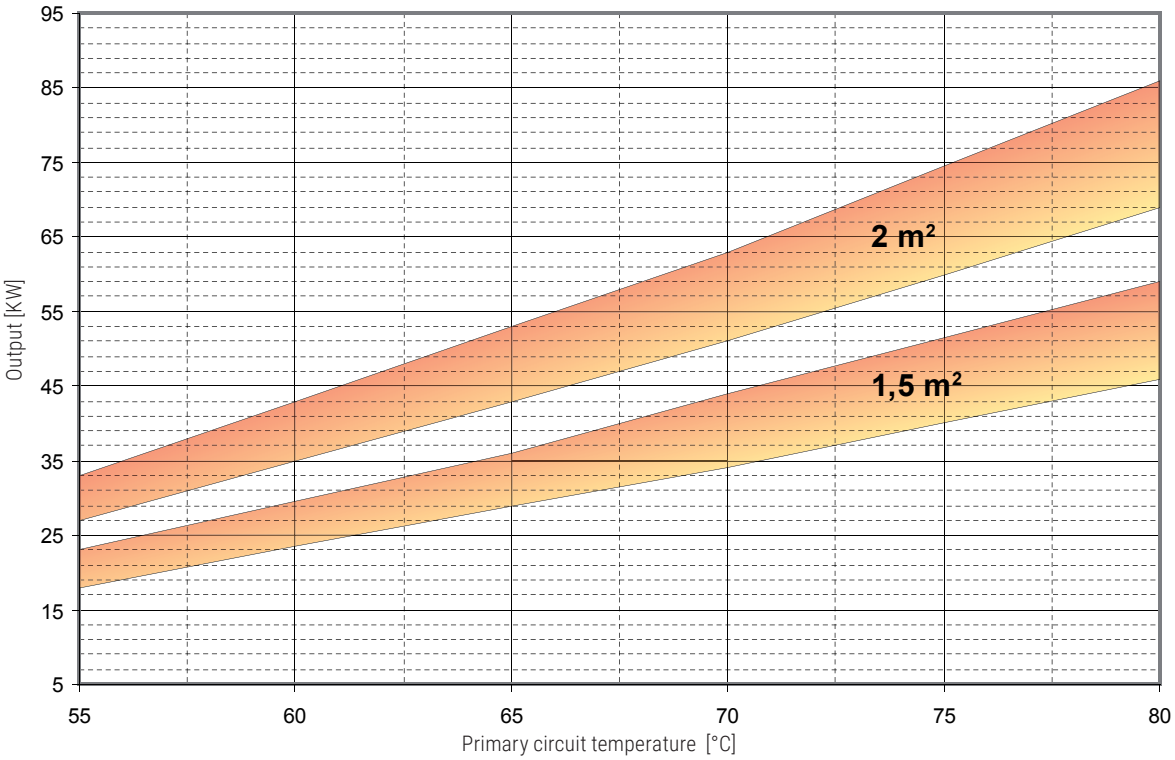

Extractable heat exchanger surface	1,5 m²		2 m²	
Flow rate [m³/h]	MAX	MIN	MAX	MIN
	6	3	10	5



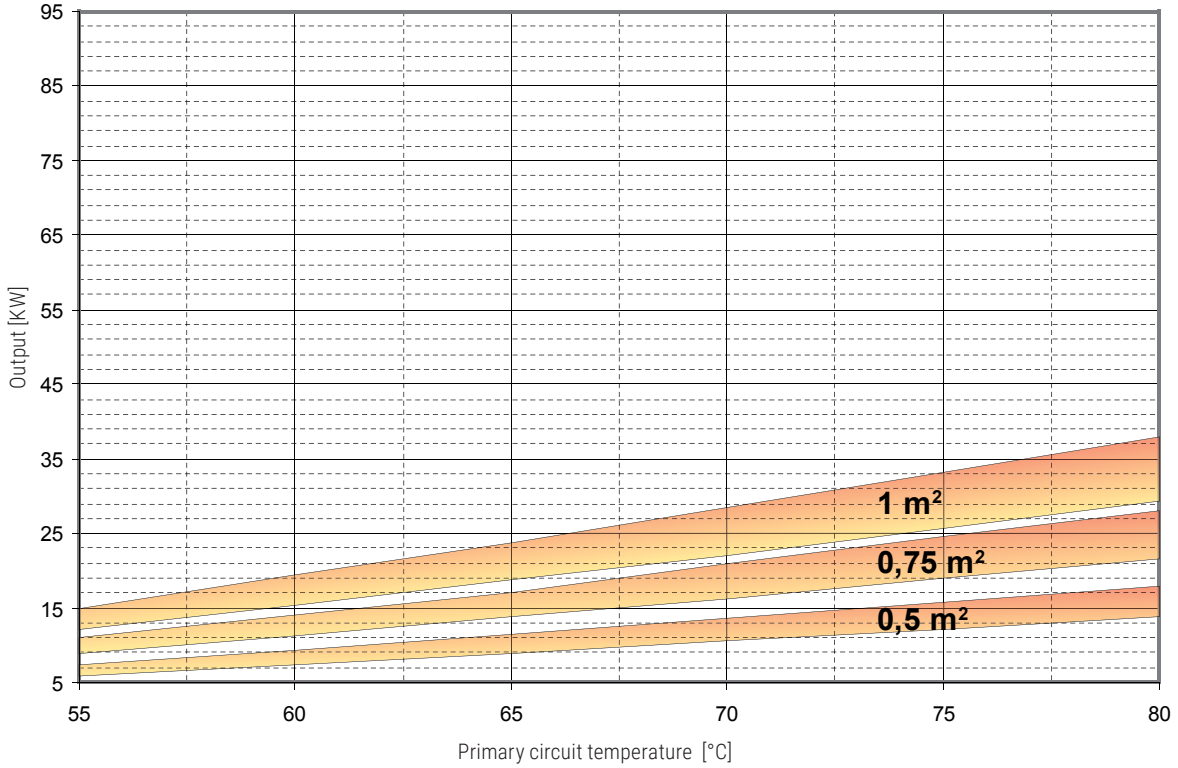

Extractable heat exchanger surface	0,5 m²		0,75 m²		1 m²	
Flow rate [m³/h]	MAX	MIN	MAX	MIN	MAX	MIN
	2	1	3	1,5	4	2

EXTRA **1 WX /** EXTRA **1 COMPACT**

HEAT EXCHANGERS TECHNICAL DATA

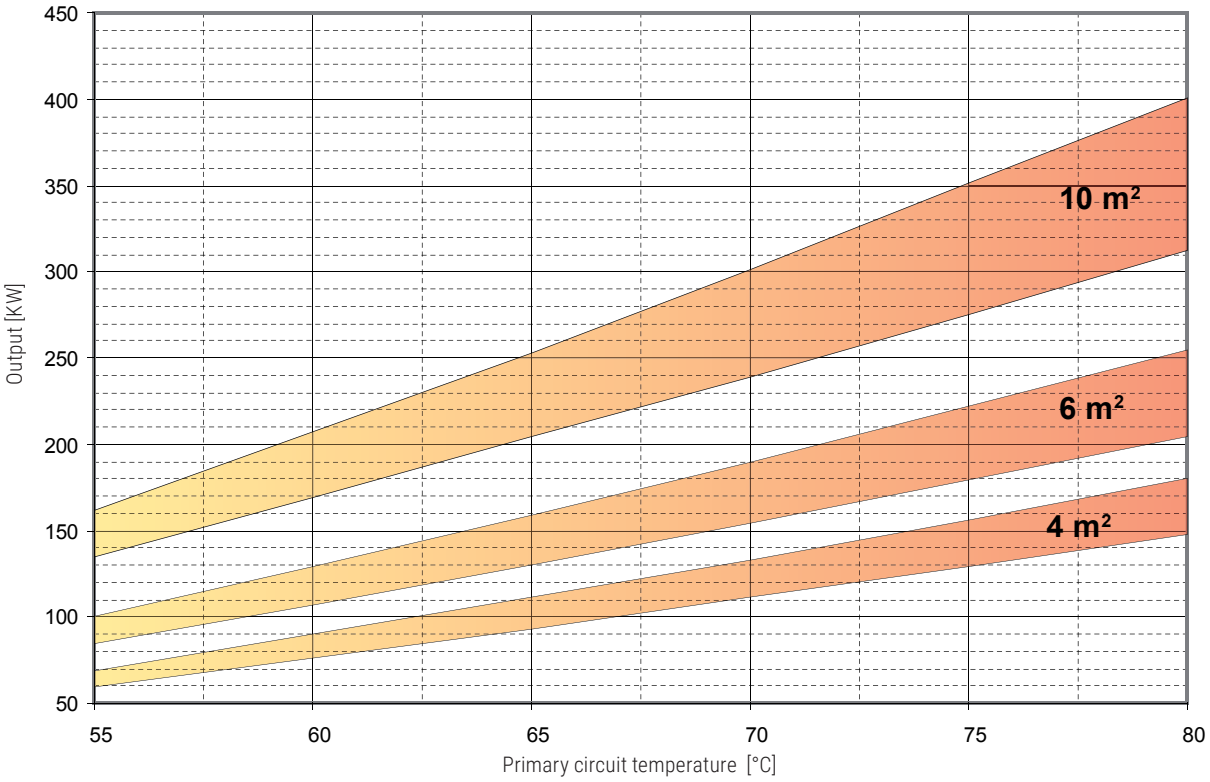

Extractable heat exchanger surface	4 m²		6 m²		10 m²	
Flow rate [m³/h]	MAX	MIN	MAX	MIN	MAX	MIN
	20	10	20	10	20	10

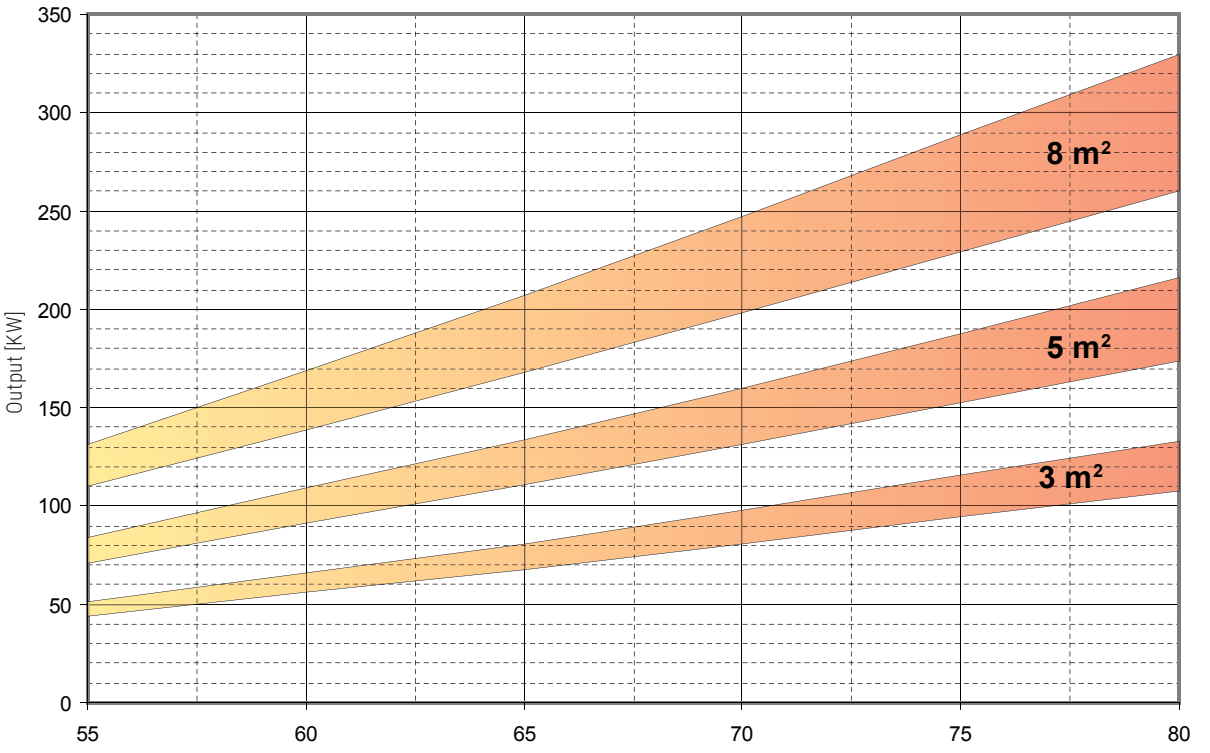

Extractable heat exchanger surface	3 m²		5 m²		8 m²	
Flow rate [m³/h]	MAX	MIN	MAX	MIN	MAX	MIN
	15	7,5	20	10	20	10

EXTRA **2 WX**

POLYWARM® COATED CALORIFIERS WITH 2 STAINLESS STEEL EXTRACTABLE HEAT EXCHANGERS



APPLICATION
Production and storage of domestic hot water (DHW).
MATERIAL
Mild steel Polywarm® coated (Attestation ACS - SSICA - DVGW - W270 - WRAS)
HEAT EXCHANGER
N° 2 Stainless steel 316L heat exchangers (upper: straight - lower: Antilegionella® with tubes bent to the bottom).
INSULATION
- HARD: High thermal insulation with ecological polyurethane hard foam.
- SOFT: NOFIRE® polyester fleece 100% made of recyclable material, with high thermal insulation. Fire resistance class B-s2d0 according to EN 13501.

Grey PVC external lining.

CATHODE PROTECTION
Magnesium anode. Models > 1500 n° 2 magnesium anodes.
DRAIN
External confluence through drain connection. Models > 1000 external confluence through drain pipe.
GASKET- FLANGE PLATE
Silicone gaskets suitable for water intended for human consumption (tested according to 98/83/CE), max temperature up to 200°C. Mild steel exchanger head with anticorrosion treatment.
WARRANTY
5 years - See general sales conditions and warranty
ACCESSORIES AND SPARE PARTS
See Accessories section for the entire list.



POLYWARM® COATED DHW STORAGE | 316L STAINLESS STEEL HEAT EXCHANGER | HEATED STORAGE

STOCK AVAILABILITY



cordivari.com/erp



On line ErP label tool

EXTRA 2 WXB

Model	HARD FOAM insulation	Stainless steel 316L heat exchanger surface		Energy efficiency class
	Art. Nr.	Lower [m²]	Upper [m²]	ErP
200	3084162360001	0,5	0,5	**B**
300	3084162360002	0,75	0,75	**C**
500	3084162360003	1,5	1,5	**C**
800	3084162360004	2	2	**B**
1000	3084162360005	3	2	**C**
1500	3084162360006	3	3	**C**
2000	3084162360007	4	4	**B**

EXTRA 2 WXC

Model	DISMOUNTABLE SOFT FLEECE insulation	Stainless steel 316L heat exchanger surface		Energy efficiency class
	Art. Nr.	Lower [m²]	Upper [m²]	ErP
500	3082162360133	1,5	1,5	**C**
800	3082162360134	2	2	**C**
1000	3082162360135	3	2	**C**
1500	3082162360136	3	3	**C**
2000	3082162360137	4	4	**C**
2500	3082162360113	5	5	
3000	3082162360108	6	6	
4000	3082162360110	8	8	
5000	3082162360112	10	10	

ACCESSORIES

ELECTRIC IMMERSION HEATERS

Mod.	Heated volume by electric immersion heater [lt]	MONOPHASE 1,5 kW	MONOPHASE 2 kW	MONOPHASE 3 kW	THREEPHASE 4 kW	THREEPHASE 5 kW	THREEPHASE 6 kW	THREEPHASE 9 kW	THREEPHASE 12 kW
		5240000000051	5240000000052	5240000000053	5240000000047	5240000000048	5240000000049	5240000000050	5240000000031
		Ignition time from 10 °C to 45 °C with electric immersion heaters [min]			Ignition time from 10 °C to 45 °C with electric immersion heaters [min]				
200	49	87	65	44	//	//	//	//	//
300	76	136	102	68	//	//	//	//	//
500	127	228	171	114	//	//	//	//	//
800	178	318	239	159	//	//	//	//	//
1000	243	436	327	218	163	131	109	73	54
1500	288	516	387	258	194	155	129	86	65
2000	443	793	595	396	297	238	198	132	99
2500	577	1033	775	517	387	310	258	172	129
3000	577	1033	775	517	387	310	258	172	129
4000	797	1428	1071	714	535	428	357	238	178
5000	1040	1864	1398	932	699	559	466	311	233

"Easy Control" Electronic Display-mounted on tank

ART. NR.	FOR MODELS
5005000310002	WXC
5005000310003	WXB



Titanium electronic anode

See Accessories section



P.E.D. product designed and produced in conformity to the article 4.3 of directive 2014/68/UE - ErP Ecodesgin directive 2009/125/CE

EXTRA **2 WX**

POLYWARM® COATED CALORIFIERS WITH 2 STAINLESS STEEL EXTRACTABLE HEAT EXCHANGERS

	STORAGE		HEAT EXCHANGER	
Model	Pmax	Tmax	Pmax	Tmax
200 ÷ 1000	8 bar	90 °C	12 bar	110 °C
1500 ÷ 5000	6 bar			

CORDIVARI Lab

TÜV Rheinland Energie und Umwelt GmbH states that test procedures and Cordivari LAB are certified conforming to European standard EN 15332, as indicated by Ecodesign ErP Directive.

TESTED ErP

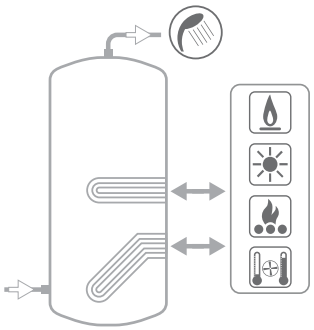

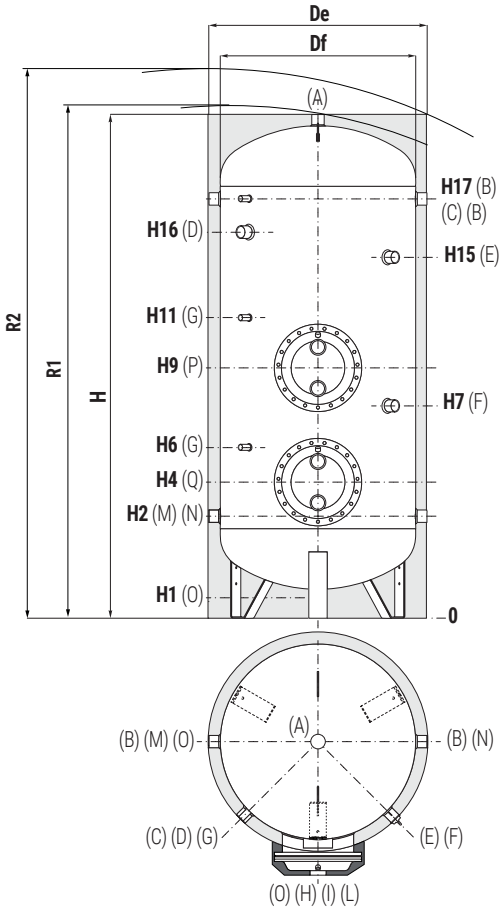

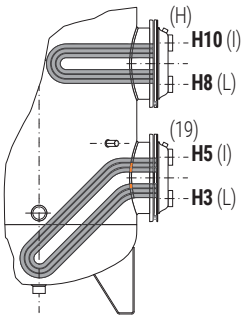

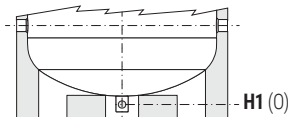

Models from 1500 to 5000 have two gripps on the bottom which allow the use of forklift when handling and drain pipe already fitted.

A	Domestic hot water outlet
B	Recirculation / Domestic hot water outlet
C	Connection for instrumentation 1/2" F
D	Connection for electric immersion heater 1" 1/2 F For models > 800 connection 2" F
E	Connection for 2nd magnesium anode 1"1/4 F (only for models > 1500)
F	Connection for magnesium anode 1" 1/4 F
G	Connection for instrumentation 1/2" F
H	Heat exchangers drain 3/8" F
I	Primary circuit outlet Upper heat exchanger1" F For models > 800 connection 2" F
M	Domestic cold water circuit inlet
N	Alternative domestic cold water circuit inlet or connection for more boilers
O	Drain 1" 1/4 F. For model 1000 connection 1"1/2 F For models > 1000 1" F
P	Upper heat exchanger flange
Q	Lower heat exchanger flange

EXTRA 2 WXB - HARD FOAM INSULATION

Model	Volume	Weight	De	H	R2	H1	H2	H3	H4	H5	H6	H7	H8	H9	H10	H11	H15	H16	H17	P - Q	M - N B	A
	[lt]	[kg]	[mm]																		Conn.	F
200	193	70	550	1449	1560	85	325	360	410	460	520	650	810	860	910	970	//	1075	1185	Øi220/Øe300	1"1/4	1"1/4
300	295	84	650	1499	1640	85	350	385	435	485	545	735	835	885	935	995	//	1100	1210	Øi220/Øe300	1"1/4	1"1/4
500	503	112	750	1800	1960	85	375	410	460	510	570	760	860	910	960	1020	//	1329	1485	Øi220/Øe300	1"1/4	1"1/4
800	799	177	900	2135	2330	85	405	450	540	630	690	870	1000	1090	1180	1240	//	1610	1765	Øi300/Øe380	1"1/4	1"1/4
1000	1047	226	1000	2221	2450	105	458	503	593	683	743	993	1053	1143	1233	1293	//	1664	1818	Øi300/Øe380	1"1/2	1"1/2
1500	1450	269	1100	2415	2660	109	440	585	675	765	825	1075	1160	1250	1340	1400	//	1895	2050	Øi300/Øe380	1"1/2	2"
2000	1985	337	1300	2492	2820	91	467	587	692	797	867	842	1157	1262	1367	1437	1952	1877	2057	Øi350/Øe430	2"	2"

EXTRA 2 WXC - DISMOUNTABLE SOFT FLEECE INSULATION

Mod.	Vol.	Weight	De	Df	H	R1	R2	H1	H2	H3	H4	H5	H6	H7	H8	H9	H10	H11	H15	H16	H17	P - Q	M - N B	A
	[lt]	[kg]	[mm]																				Conn.	F
500	503	105	870	650	1841	1998	2090	101	416	451	501	551	611	801	901	951	1001	1061	//	1370	1526	Øi220/Øe300	1"1/4	1"1/4
800	799	177	970	750	2188	2220	2400	113	433	478	568	658	718	898	1028	1118	1208	1268	//	1638	1793	Øi300/Øe380	1"1/4	1"1/4
1000	1047	226	1070	850	2242	2270	2490	101	454	499	589	679	739	989	1049	1139	1229	1289	//	1660	1814	Øi300/Øe380	1"1/2	1"1/2
1500	1450	269	1210	950	2440	2495	2730	109	440	585	675	765	825	1075	1160	1250	1340	1400	//	1895	2050	Øi300/Øe380	1"1/2	2"
2000	1985	337	1360	1100	2492	2570	2850	91	467	587	692	797	867	842	1157	1262	1367	1437	1952	1877	2057	Øi350/Øe430	2"	2"
2500	2322	399	1350	1250	2311	2480	2690	140	551	671	776	881	951	976	1271	1376	1481	1551	1816	1732	1891	Øi350/Øe430	2"	2"
3000	2928	464	1350	1250	2811	2950	3130	140	551	731	836	941	1011	1036	1371	1476	1581	1651	2316	2232	2391	Øi350/Øe430	2"	2"
4000	3776	618	1500	1400	2875	3050	3250	114	570	750	855	960	1030	1035	1390	1495	1600	1670	2315	2238	2410	Øi350/Øe430	2"	2"
5000	4990	768	1700	1600	2915	3130	3380	94	580	750	855	960	1030	1035	1400	1505	1610	1680	2335	2265	2420	Øi350/Øe430	2"	2"

P.E.D. product designed and produced in conformity to the article 4.3 of directive 2014/68/UE - ErP Ecodesgin directive 2009/125/CE

CORDIVARI

EXTRA **2 WX**

HEAT EXCHANGERS TECHNICAL DATA

Cordivari heat exchangers, with tubes bent to the bottom, are able to heat the complete volume in an homogeneus way.
Energy storaging is therefore improved and ignition time data have to be referred to the complete volume of the tank, while in traditional straight heat exchangers equipped calorifires, a range between 9-17% of volume remains cold.

Model	Primary Flow rate	Ignition time (minutes) from 10 °C to t2 and primary at T1				Maximum power exchange (kW) with primary at T1, secondary within 10-45 °C and constant use of DHW production				DHW continuous production lt/h within 10-45 °C and primary at T1			
	[m³/h]	T1/t2				T1				T1			
		55/50	65/60	70/60	80/60	55	65	70	80	55	65	70	80
200	2	113	113	77	49	7,3	12	14	18	178	283	338	455
	1	147	148	102	65	6	9	11	13,9	141	218	258	344
300	3	112	113	76	48	11	17	21	28	274	435	520	701
	1,5	145	146	102	65	9	14	16	21,6	219	339	402	534
500	6	90	90	62	39	23	37	44	59	571	909	1088	1467
	3	114	115	80	51	19	29	35	46	466	722	856	1137
800	10	101	101	69	44	33	53	64	86	815	1310	1572	2128
	5	124	125	86	55	28	44	52	69	688	1077	1282	1712
1000	15	82	83	56	36	51	82	98	133	1257	2024	2429	3293
	7,5	101	100	69	44	44	68	81	108	1076	1689	2010	2685
1500	15	120	119	82	51	51	81	98	133	1256	2022	2428	3290
	7,5	145	146	100	64	44	68	81	108	1075	1687	2008	2684
2000	20	121	122	83	52	69	111	133	180	1699	2738	3288	4453
	10	146	147	101	65	59	93	111	148	1465	2302	2741	3665
2500	20	118	119	81	51	69	111	133	180	1699	2738	3288	4453
	10	145	146	101	65	59	93	111	148	1465	2302	2741	3665
3000	20	128	127	87	55	100	159	190	255	2461	3926	4694	6321
	10	456	157	110	70	84	130	154	204	2082	3224	3817	5053
4000	20	126	127	87	56	131	207	247	330	3236	5121	6105	8168
	10	159	161	112	73	110	168	198	260	2718	4151	4903	6443
5000	20	137	138	96	61	162	253	301	401	3992	6270	7450	9921
	10	176	179	125	82	135	204	239	312	3332	5049	5923	7727

UPPER
HEAT EXCHANGER

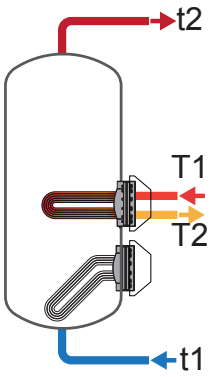

Model	Primary Flow rate	DHW produced in the first 10 minutes in lt/10' input 10 °C output 45 °C, storage at t2 and primary at T1				DHW produced in the first hour in lt/60' input 10 °C output 45 °C, storage at t2 and primary at T1				Heat exchanger pressure loss	
	[m³/h]	T1/t2				T1/t2				[mm H_2O]	[mbar]
		55/50	65/60	70/60	80/60	55/50	65/60	70/60	80/60		
200	2	247	319	328	347	360	498	542	635	309	30,3
	1	241	308	314	329	330	446	478	547	84,74	8,3
300	3	371	480	494	524	545	755	823	968	372	36,5
	1,5	362	464	474	496	501	678	729	834	101,02	9,9
500	6	649	844	874	937	1011	1420	1563	1866	718	70,4
	3	632	813	836	882	927	1270	1378	1602	189,22	18,6
800	10	1039	1347	1391	1483	1555	2177	2386	2831	1380	135,3
	5	1018	1308	1342	1414	1453	1990	2154	2498	358,5	35,2
1000	15	1347	1759	1826	1970	2143	3041	3365	4056	2295	225,1
	7,5	1316	1703	1756	1869	1998	2773	3029	3569	589,6	57,8
1500	15	1855	2394	2462	2605	2651	3675	4000	4689	2295	225,1
	7,5	1825	2338	2392	2504	2506	3407	3664	4204	589,6	57,8
2000	20	2546	3285	3377	3571	3622	5019	5459	6391	2996	293,8
	10	2507	3212	3285	3439	3435	4670	5021	5761	766,42	75,2
2500	20	2927	3761	3852	4046	4003	5495	5935	6867	2436	238,9
	10	2888	3688	3761	3915	3815	5146	5497	6236	624	61,2
3000	20	3748	4827	4955	5226	5307	7314	7928	9230	2836	278,1
	10	3685	4710	4809	5015	5004	6752	7226	8215	723	70,9
4000	20	4842	6232	6396	6740	6892	9475	10263	11913	3896	382,1
	10	4756	6070	6196	6452	6477	8699	9301	10533	989	97,0
5000	20	6362	8166	8363	8775	8891	12137	13081	15058	4707	461,6
	10	6252	7963	8109	8409	8363	11161	11860	13303	1192	116,9

EXTRA **2 WX**

HEAT EXCHANGERS TECHNICAL DATA

Model	Primary Flow rate	Ignition time (minutes) from 10 °C to t2 and primary at T1				Maximum power exchange (kW) with primary at T1, secondary within 10-45 °C and constant use of DHW production				DHW continuous production lt/h within 10-45 °C and primary at T1			
	[m³/h]	T1/t2				T1				T1			
		55/50	65/60	70/60	80/60	55	65	70	80	55	65	70	80
200	2	57	57	39	25	7	11	14	18	179	283	339	456
	1	74	75	52	33	6	9	11	14	142	219	259	344
300	3	57	57	39	25	11	18	21	28	275	436	521	702
	1,5	73	73	52	33	9	14	16	22	220	340	403	535
500	6	52	52	36	23	23	37	44	59	573	911	1090	1468
	3	66	55	46	30	19	29	35	46	468	724	857	1139
800	10	62	62	42	27	33	53	64	86	817	1312	1573	2129
	5	75	76	53	34	28	44	52	69	690	1079	1284	1715
1000	10	80	80	55	35	32	51	61	82	783	1252	1501	2029
	5	100	100	70	45	26	41	48	65	647	1008	1198	1599
1500	15	68	68	47	30	51	82	98	133	1259	2026	2430	3295
	7,5	82	83	57	37	44	68	81	109	1077	1690	2011	2687
2000	20	70	70	48	30	69	111	133	180	1702	2741	3293	4463
	10	84	85	59	37	59	93	111	148	1468	2306	2744	3668
2500	20	59	59	40	25	84	134	160	216	2069	3313	3969	5358
	10	71	72	50	32	71	111	131	174	1758	2738	3249	4318
3000	20	71	72	49	31	100	159	190	255	2465	3931	4698	6325
	10	88	89	62	40	84	130	154	204	2086	3229	3821	5057
4000	20	71	72	50	32	131	207	247	330	3242	5126	6112	8179
	10	89	90	63	41	110	168	198	260	2723	4167	4909	6448
5000	20	78	78	54	35	162	253	301	400	3998	6275	7459	9924
	10	99	100	71	46	135	204	239	312	3338	5055	5930	7735

LOWER
HEAT EXCHANGER

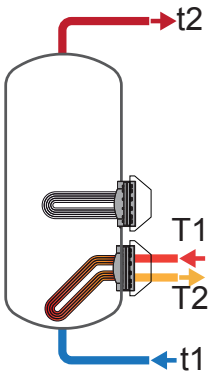

Model	Primary Flow rate	DHW produced in the first 10 minutes in lt/10' input 10 °C output 45 °C, storage at t2 and primary at T1				DHW produced in the first hour in lt/60' input 10 °C output 45 °C, storage at t2 and primary at T1				Heat exchanger pressure loss	
	[m³/h]	T1/t2				T1/t2				[mm H_2O]	[mbar]
		55/50	65/60	70/60	80/60	55/50	65/60	70/60	80/60		
200	2	140	184	194	213	253	364	408	502	294,35	28,9
	1	133	174	180	194	223	312	344	412	80,5	7,9
300	3	215	284	298	328	389	560	628	773	355,7	34,9
	1,5	206	268	279	301	345	483	534	639	95,97	9,4
500	6	418	555	585	648	781	1132	1275	1577	682	66,9
	3	400	524	546	593	697	982	1088	1314	179	17,6
800	10	689	910	954	1046	1207	1741	1950	2395	1311	128,6
	5	668	871	905	977	1105	1555	1719	2063	341	33,4
1000	10	816	1066	1107	1195	1312	1859	2058	2480	1311	128,6
	5	794	1025	1057	1124	1203	1664	1816	2136	341	33,4
1500	15	1149	1512	1579	1723	1947	2795	3118	3810	2181	213,9
	7,5	1119	1456	1509	1622	1801	2526	2783	3324	560	54,9
2000	20	1595	2095	2187	2382	2672	3831	4273	5209	2846	279,1
	10	1556	2023	2096	2250	2485	3483	3834	4573	728	71,4
2500	20	1652	2186	2296	2527	2963	4285	4809	5921	2314	226,9
	10	1600	2091	2176	2354	2714	3825	4233	5089	592	58,1
3000	20	2303	3021	3149	3420	3865	5511	6124	7426	2745	269,2
	10	2240	2904	3003	3209	3561	4949	5423	6411	700	68,6
4000	20	2972	3894	4059	4403	5026	7141	7930	9583	3701	362,9
	10	2886	3735	3858	4115	4610	6374	6967	8198	939	92,1
5000	20	3882	5066	5263	5674	6414	9040	9987	11959	4472	438,6
	10	3772	4863	5008	5309	5886	8064	8764	10208	1132	111,0

EXTRA **2**

HEAT EXCHANGERS PRESSURE LOSS



Lower heat exchangers surface [m²]	
200	0,5
300	0,75
500	1,5
800	2
1000	3
1500	3
2000	4
2500	5
3000	6
4000	8
5000	10

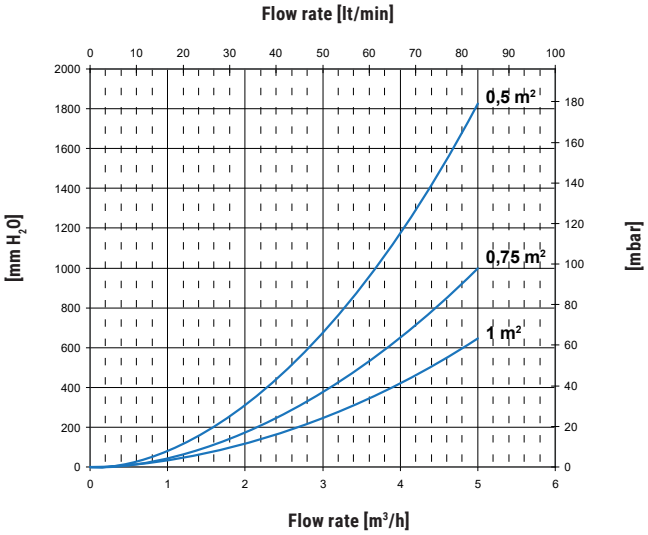

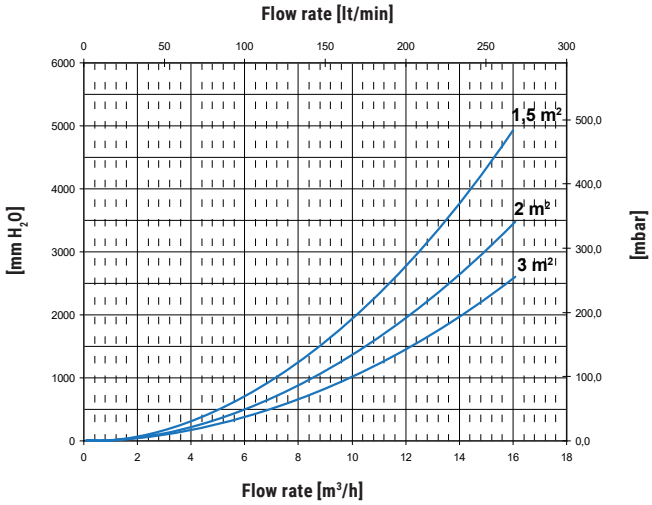

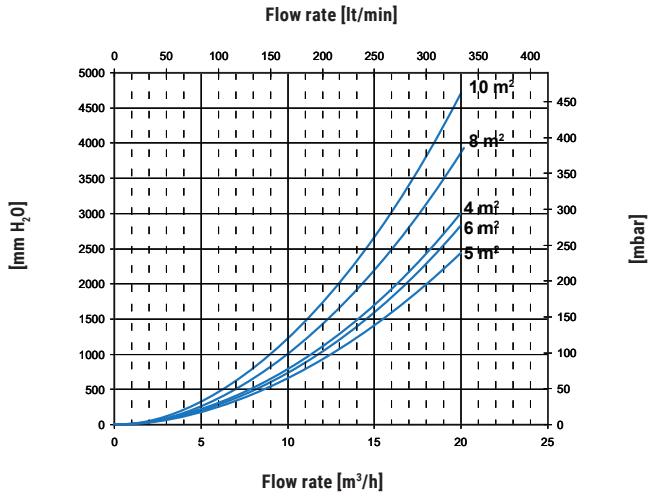

EXTRA **2**

HEAT EXCHANGERS PRESSURE LOSS



Upper heat exchangers surface [m²]	
200	0,5
300	0,75
500	1,5
800	2
1000	2
1500	3
2000	4
2500	5
3000	6
4000	8
5000	10

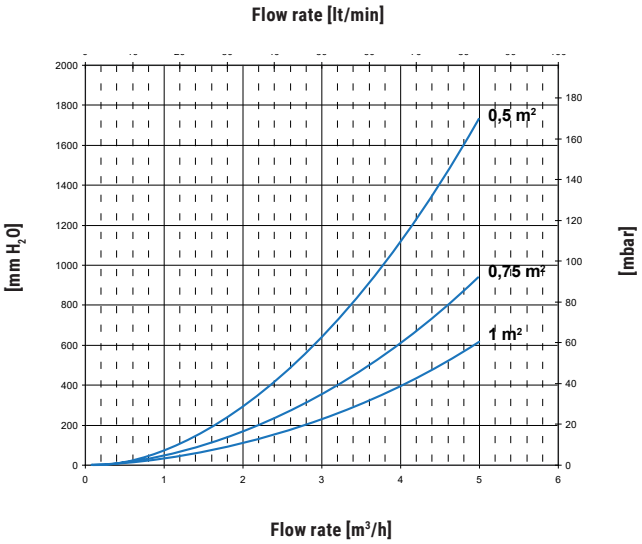

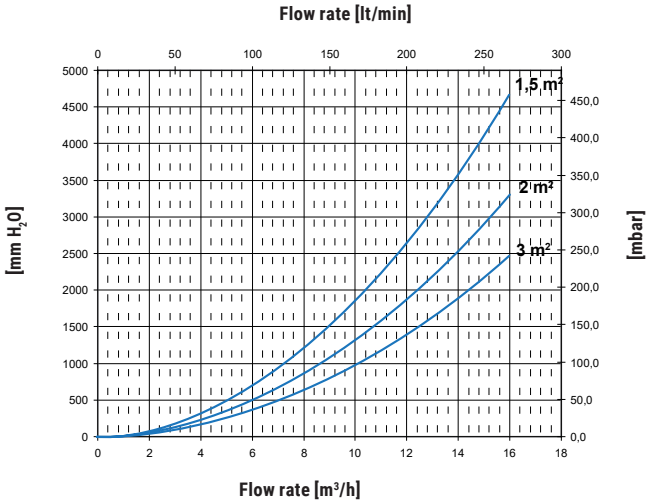

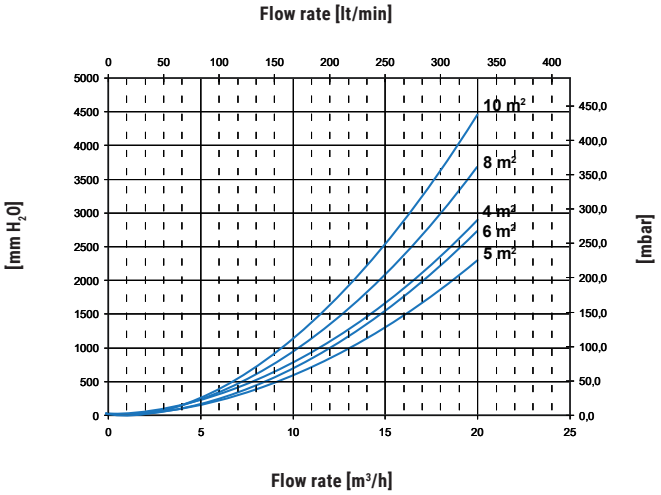

EXAMPLE OF INSTALLATION WITH **EXTRA 2**

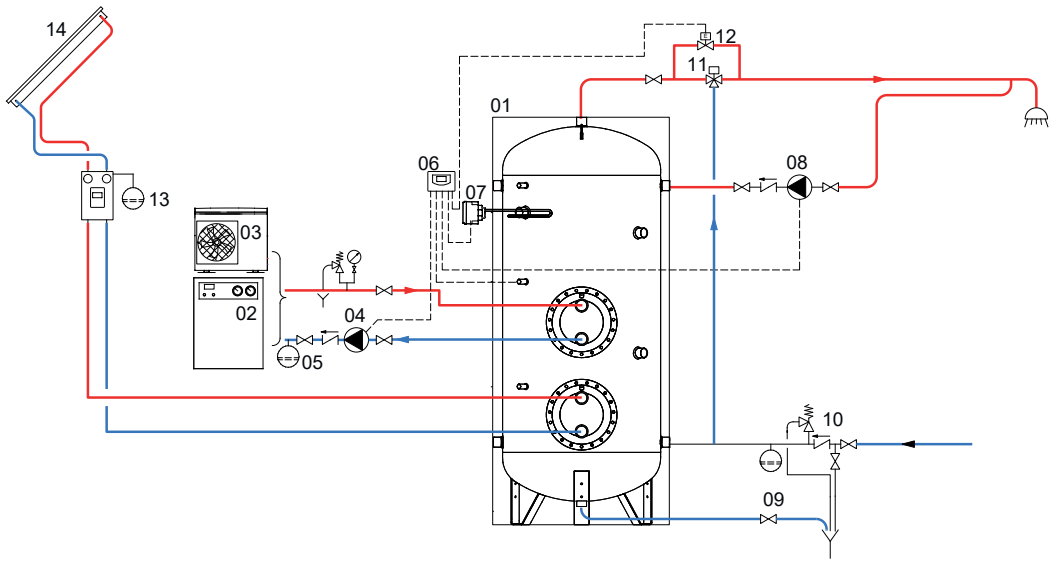

1	Extra 2	5	Expansion vessel	9	Blowdown valve	13	Solar system circulation group
2	Generator	6	Easy Control electronic display/ thermostat	10	Hydraulic safety group	14	Solar panels
3	Heat pump generator	7	Electric immersion heater (optional)	11	Thermostatic mixing valve		
4	Circulation group	8	DHW recirculation group	12	By-pass solenoid valve		

EXTRA **3 WX**

POLYWARM® COATED CALORIFIERS WITH 3 STAINLESS STEEL EXTRACTABLE HEAT EXCHANGERS



APPLICATION
Production and storage of domestic hot water (DHW).
MATERIAL
Mild steel Polywarm® coated (Attestation ACS - SSICA - DVGW - W270 - WRAS)
HEAT EXCHANGER
N° 3 Stainless steel 316L heat exchangers (upper and middle: straight - lower: Antilegionella® with tubes bent to the bottom).
INSULATION
NOFIRE® polyester fleece 100% made of recyclable material, with high thermal insulation. Fire resistance class B-s2d0 according to EN 13501. Grey PVC external lining.

CATHODE PROTECTION
N° 2 magnesium anodes.
DRAIN
External confluence through drain connection.
GASKET- FLANGE PLATE
Silicone gaskets suitable for water intended for human consumption (tested according to 98/83/CE), max temperature up to 200°C. Mild steel exchanger head with anticorrosion treatment.
WARRANTY
5 years - See general sales conditions and warranty
ACCESSORIES AND SPARE PARTS
See Accessories section for the entire list.

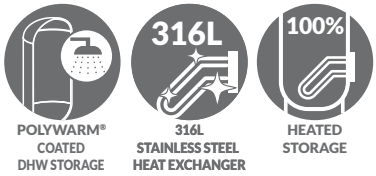

POLYWARM® COATED DHW STORAGE
316L STAINLESS STEEL HEAT EXCHANGER
HEATED STORAGE



cordivari.com/erp



On line ErP label tool

EXTRA 3 WXC

Model	DISMOUNTABLE SOFT FLEECE insulation	STAINLESS STEEL 316L HEAT EXCHANGER SURFACE Lower	Middle	Upper	ENERGY EFFICIENCY CLASS ErP
	Art. Nr.	[m²]			
1500	3092162360136	3	3	1,5	C
2000	3092162360137	4	4	2	C
3000	3092162360109	6	6	3	
5000	3092162360112	10	10	5	

ACCESSORIES

"Easy Control" Electronic Display-mounted on tank

ART. NR.	FOR MODELS
5005000310002	WXC



Thermometer

Art. Nr.
5032240000107
5 units box



Titanium electronic anode

Art. Nr.	Model
5200000000011	1500
5200000000013	2000÷5000



P.E.D. product designed and produced in conformity to the article 4.3 of directive 2014/68/UE - ErP Ecodesgin directive 2009/125/CE

EXTRA **3 WX**

POLYWARM® COATED CALORIFIERS WITH 3 STAINLESS STEEL EXTRACTABLE HEAT EXCHANGERS

STORAGE		HEAT EXCHANGER	
Pmax	Tmax	Pmax	Tmax
6 bar	90 °C	12 bar	110 °C

CORDIVARI Lab

TÜV Rheinland Energie und Umwelt GmbH states that test procedures and Cordivari LAB are certified conforming to European standard EN 15332, as indicated by Ecodesign ErP Directive.

TESTED ErP

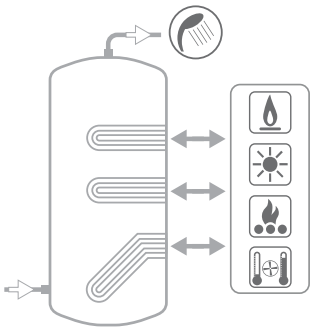

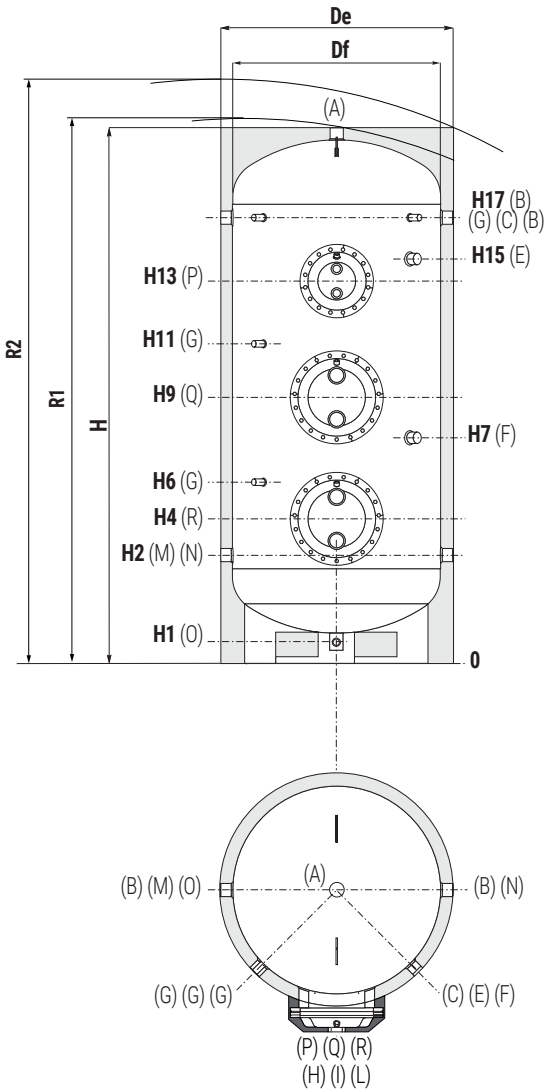

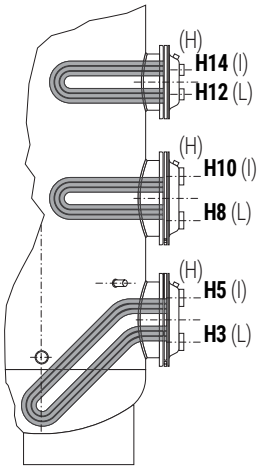

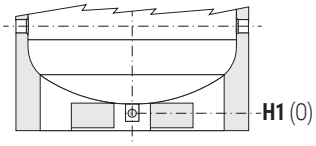

The calorifier have two gripps on the bottom which allow the use of forklift when handling and already equipped with mounted drainage tube.

A	Domestic hot water outlet 2" F
B	Recirculation / Domestic hot water outlet 1"1/2 F For models > 1500 connection 2" F
C-G	Connection for instrumentation 1/2" F
E	Connection for 2nd magnesium anode 1"1/4 F (only for models > 1500)
F	Connection for magnesium anode 1"1/4 F
H	Heat exchangers drain 3/8" F
I	Primary circuit inlet Upper heat exchanger2" F
L	Primary circuit outlet Upper heat exchanger2" F
M	Domestic cold water circuit inlet 1"1/2 F For models > 1500 connection 2" F
N	Alternative domestic cold water circuit inlet or connection for more boilers 1"1/2 F For models > 1500 connection 2" F
O	Drain 1" F
P	Upper heat exchanger flange
Q	Middle heat exchanger flange
R	Lower heat exchanger flange

Model	Volume	Weight	De	Df	H	R1	R2	H1	H2	H3	H4	H5	H6	H7	H8
	[lt]	[kg]	[mm]												
1500	1455	291	1210	950	2440	2495	2730	109	440	585	675	765	825	1075	1160
2000	1991	430	1360	1100	2492	2570	2850	91	467	587	692	797	867	842	1157
3000	2933	557	1350	1250	2811	2950	3130	140	551	731	836	941	1011	1036	1371
5000	4996	882	1700	1600	2915	3130	3380	94	580	750	855	960	1030	1035	1400

Model	H9	H10	H11	H12	H13	H14	H15	H17	Q - R	P
	[mm]									
1500	1250	1340	1400	1785	1875	1965	//	2050	Øi300/Øe380	Øi300/Øe380
2000	1262	1367	1437	1727	1817	1907	1592	2057	Øi350/Øe430	Øi300/Øe380
3000	1476	1581	1651	2086	2176	2266	1926	2391	Øi350/Øe430	Øi300/Øe380
5000	1505	1610	1680	2010	2115	2220	1855	2420	Øi350/Øe430	Øi350/Øe430

P.E.D. product designed and produced in conformity to the article 4.3 of directive 2014/68/UE - ErP Ecodesgin directive 2009/125/CE

CORDIVARI

EXTRA **3 WX**

HEAT EXCHANGERS TECHNICAL DATA

Cordivari heat exchangers, with tubes bent to the bottom, are able to heat the complete volume in an homogeneus way.
Energy storaging is therefore improved and ignition time data have to be referred to the complete volume of the tank, while in traditional straight heat exchangers equipped calorifires, a range between 9-17% of volume remains cold.

UPPER HEAT EXCHANGER

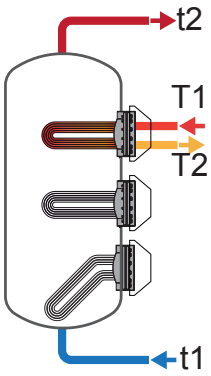

Model	Primary Flow rate	Ignition time (minutes) from 10 °C to t2 and primary at T1				Maximum power exchange (kW) with primary at T1, secondary within 10-45 °C and constant use of DHW production				DHW continuous production lt/h within 10-45 °C and primary at T1			
	[m³/h]	T1/t2				T1				T1			
		55/50	65/60	70/60	80/60	55	65	70	80	55	65	70	80
1500	6	69	68	48	30	23	37	44	59	571	909	1088	1466
	3	88	89	61	39	19	29	35	46	465	722	855	1137
2000	10	76	77	52	33	33	53	64	86	815	1309	1572	2128
	5	93	94	65	41	28	44	52	69	688	1077	1281	1712
3000	15	63	63	43	27	51	82	98	133	1256	2023	2429	3293
	7,5	77	77	54	34	44	68	81	109	1075	1688	2009	2685
5000	20	81	81	56	35	84	134	160	216	2066	134	3965	5353
	10	99	100	69	44	71	111	131	174	1755	2734	3244	4314

Model	Primary Flow rate	DHW produced in the first 10 minutes in lt/10' input 10 °C output 45 °C, storage at t2 and primary at T1				DHW produced in the first hour in lt/60' input 10 °C output 45 °C, storage at t2 and primary at T1				Heat exchanger pressure loss	
	[m³/h]	T1/t2				T1/t2				[mm H_2O]	[mbar]
		55/50	65/60	70/60	80/60	55/50	65/60	70/60	80/60		
1500	6	520	683	713	776	882	1259	1402	1704	682	66,9
	3	503	652	674	721	797	1109	1215	1441	179	17,6
2000	10	811	1062	1106	1199	1327	1891	2102	2547	1311	128,6
	5	790	1024	1058	1130	1226	1706	1869	2214	341	33,4
3000	15	1081	1427	1495	1639	1877	2708	3033	3724	2181	213,9
	7,5	1051	1371	1425	1538	1732	2440	2697	3238	560	54,9
5000	20	2152	2282	2921	3152	3461	2367	5432	6542	2314	226,9
	10	2101	2716	2801	2979	3212	4447	4855	5711	592	58,1

MIDDLE HEAT EXCHANGER

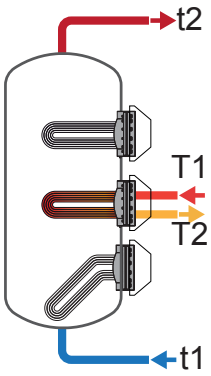

Model	Primary Flow rate	Ignition time (minutes) from 10 °C to t2 and primary at T1				Maximum power exchange (kW) with primary at T1, secondary within 10-45 °C and constant use of DHW production				DHW continuous production lt/h within 10-45 °C and primary at T1			
	[m³/h]	T1/t2				T1				T1			
		55/50	65/60	70/60	80/60	55	65	70	80	55	65	70	80
1500	15	68	68	47	30	51	82	98	133	1259	2026	2430	3295
	7,5	82	83	57	37	44	68	81	109	1077	1690	2011	2687
2000	20	70	70	48	30	69	111	133	180	1702	2741	3293	4463
	10	84	85	59	37	59	93	111	148	1468	2306	2744	3668
3000	20	71	72	49	31	100	159	190	255	2465	3931	4698	6325
	10	88	89	62	40	84	130	154	204	2086	3229	3821	5057
5000	20	78	78	54	35	162	253	301	400	3998	6275	7459	9924
	10	99	100	71	46	135	204	239	312	3338	5055	5930	7735

Model	Primary Flow rate	DHW produced in the first 10 minutes in lt/10' input 10 °C output 45 °C, storage at t2 and primary at T1				DHW produced in the first hour in lt/60' input 10 °C output 45 °C, storage at t2 and primary at T1				Heat exchanger pressure loss	
	[m³/h]	T1/t2				T1/t2				[mm H_2O]	[mbar]
		55/50	65/60	70/60	80/60	55/50	65/60	70/60	80/60		
1500	15	1149	1512	1579	1723	1947	2795	3118	3810	2181,03	213,9
	7,5	1119	1456	1509	1622	1801	2526	2783	3324	560,28	54,9
2000	20	1595	2095	2187	2382	2672	3831	4273	5209	2846,25	279,1
	10	1556	2023	2096	2250	2485	3483	3834	4573	728,1	71,4
3000	20	2303	3021	3149	3420	3865	5511	6124	7426	2745,34	269,2
	10	2240	2904	3003	3209	3561	4949	5423	6411	700,69	68,7
5000	20	3882	5066	5263	5674	6414	9040	9987	11959	4472,31	438,6
	10	3772	4863	5008	5309	5886	8064	8764	10208	290,29	28,5

EXTRA **3 WX**

HEAT EXCHANGERS TECHNICAL DATA

LOWER
HEAT EXCHANGER

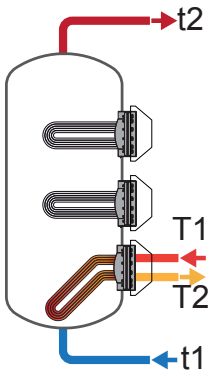

Model	Primary Flow rate	Ignition time (minutes) from 10 °C to t2 and primary at T1				Maximum power exchange (kW) with primary at T1, secondary within 10-45 °C and constant use of DHW production				DHW continuous production lt/h within 10-45 °C and primary at T1			
	[m³/h]	T1/t2				T1				T1			
		55/50	65/60	70/60	80/60	55	65	70	80	55	65	70	80
1500	15	120	119	82	51	51	81	98	133	1256	2022	2428	3290
	7,5	145	146	100	64	44	68	81	108	1075	1687	2008	2684
2000	20	121	122	83	52	69	111	133	180	1699	2738	3288	4453
	10	146	147	101	65	59	93	111	148	1465	2302	2741	3665
3000	20	128	127	87	55	100	159	190	255	2461	3926	4694	6321
	10	456	157	110	70	84	130	154	204	2082	3224	3817	5053
5000	20	137	138	96	61	162	253	301	401	3992	6270	7450	9921
	10	176	179	125	82	135	204	239	312	3332	5049	5923	7727

Model	Primary Flow rate	DHW produced in the first 10 minutes in lt/10' input 10 °C output 45 °C, storage at t2 and primary at T1				DHW produced in the first hour in lt/60' input 10 °C output 45 °C, storage at t2 and primary at T1				Heat exchanger pressure loss	
	[m³/h]	T1/t2				T1/t2				[mm H_2O]	[mbar]
		55/50	65/60	70/60	80/60	55/50	65/60	70/60	80/60		
1500	15	1855	2394	2462	2605	2651	3675	4000	4689	2295	225,1
	7,5	1825	2338	2392	2504	2506	3407	3664	4204	589,6	57,8
2000	20	2546	3285	3377	3571	3622	5019	5459	6391	2996	293,8
	10	2507	3212	3285	3439	3435	4670	5021	5761	766,42	75,2
3000	20	3748	4827	4955	5226	5307	7314	7928	9230	2836	278,1
	10	3685	4710	4809	5015	5004	6752	7226	8215	723	70,9
5000	20	6362	8166	8363	8775	8891	12137	13081	15058	4707	461,6
	10	6252	7963	8109	8409	8363	11161	11860	13303	1192	116,9

EXAMPLE OF INSTALLATION WITH **EXTRA 3**

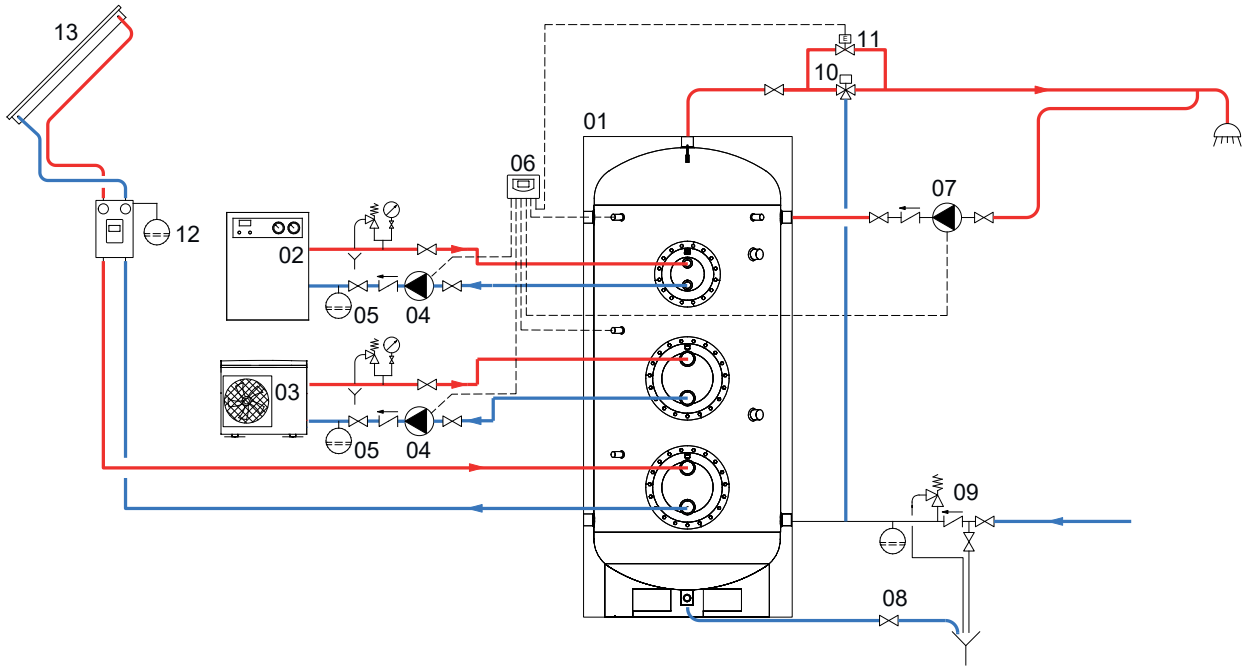

1	Extra 3	5	Expansion vessel	9	Hydraulic safety group	13	Solar panels
2	Generator	6	Easy Control electronic display/ thermostat	10	Thermostatic mixing valve		
3	Heat pump generator	7	DHW recirculation group	11	By-pass solenoid valve		
4	Circulation group	8	Blowdown valve	12	Solar system circulation group		

EXTRA **3**

HEAT EXCHANGERS PRESSURE LOSS



	Lower heat exchangers surface [m²]
1500	3
2000	4
3000	6
5000	10

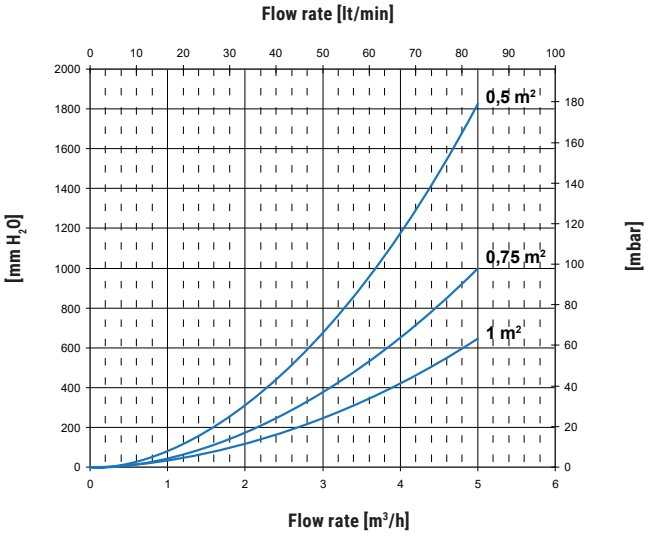

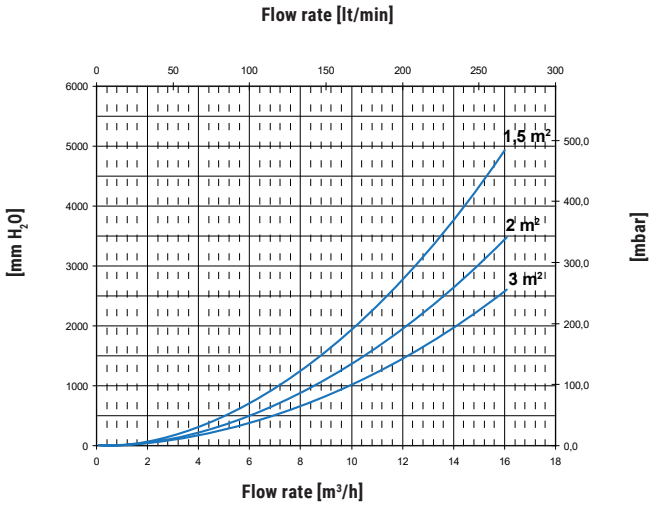

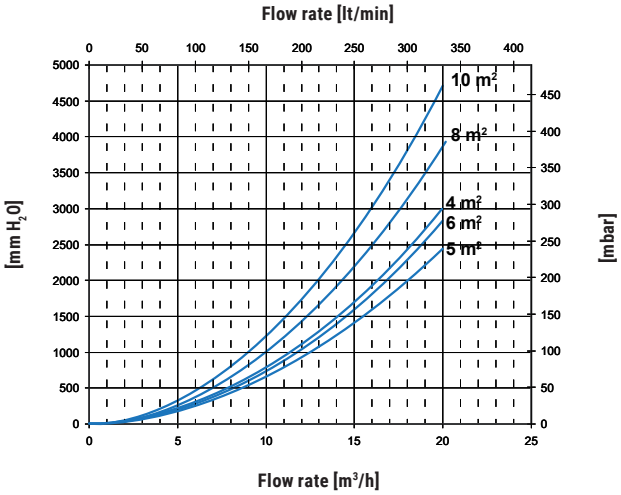

EXTRA **3**

Heat exchangers Pressure loss



Heat exchangers surface [m²]		
	Middle	Upper
1500	3	1,5
2000	4	2
3000	6	3
5000	10	5

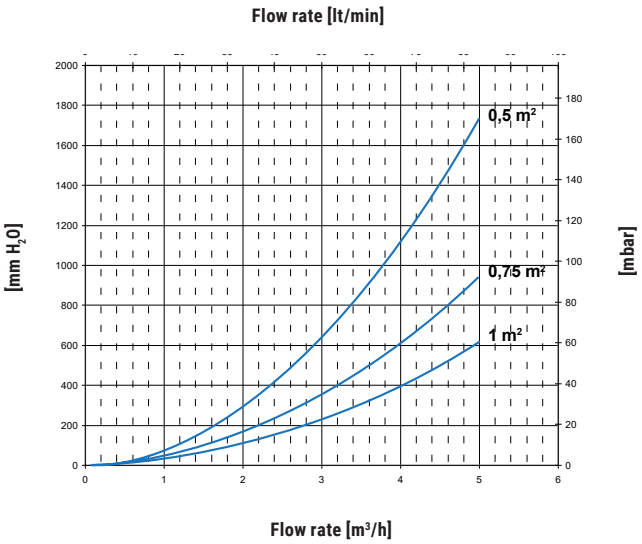

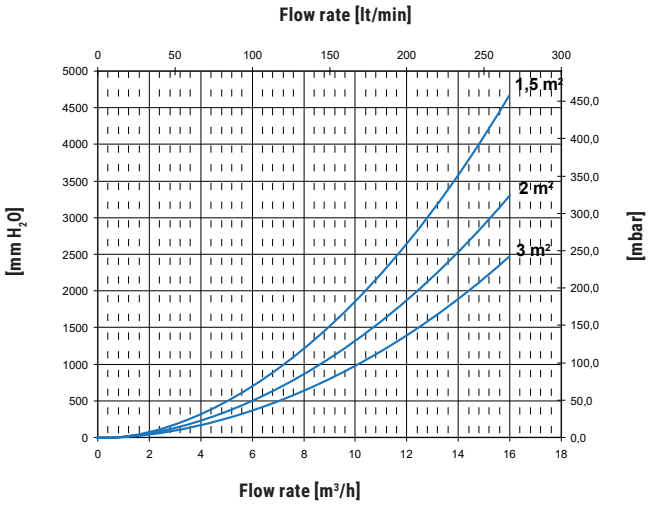

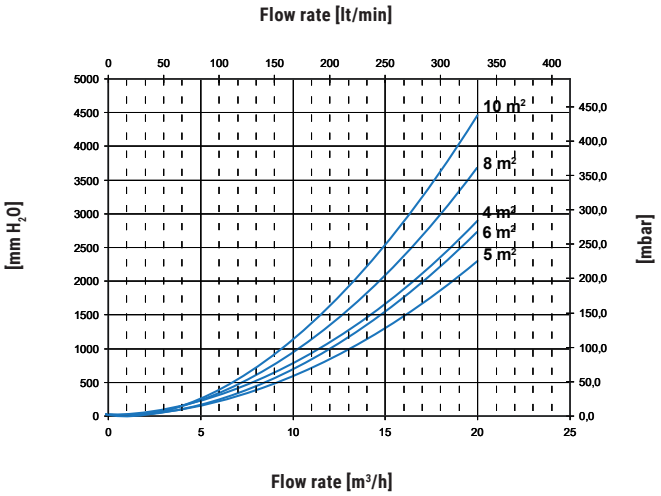

EXTRA **1 HORIZONTAL**

POLYWARM® COATED CALORIFIERS WITH 1 STAINLESS STEEL EXTRACTABLE HEAT EXCHANGER



APPLICATION
Production and storage of domestic hot water (DHW).
MATERIAL
Mild steel Polywarm® coated (Attestation ACS - SSICA - DVGW - W270 - WRAS)
HEAT EXCHANGER
Stainless steel 316L heat exchanger
INSULATION (DISMOUNTABLE)
NOFIRE® polyester fleece 100% made of recyclable material, with high thermal insulation. Fire resistance class B-s2d0 according to EN 13501.
Grey PVC external lining.
CATHODE PROTECTION
Magnesium anode. Models > 1500 n° 2 magnesium anodes.
GASKET- FLANGE PLATE
Silicone gaskets suitable for water intended for human consumption (tested according to 98/83/CE), max temperature up to 200°C. Mild steel exchanger head with anticorrosion treatment.
WARRANTY
5 years - See general sales conditions and warranty
ACCESSORIES AND SPARE PARTS
See Accessories section for the entire list.

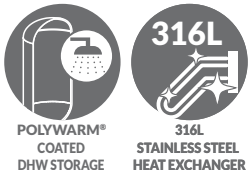



cordivari.com/erp



On line ErP label tool

EXTRA 1 WXC OR

Model	DISMOUNTABLE SOFT FLEECE insulation	STAINLESS STEEL 316L HEAT EXCHANGER SURFACE	ENERGY EFFICIENCY CLASS
	Art. Nr.	[m²]	
200	3072161430031	0,5	**C**
300	3072161430032	0,75	**C**
500	3072161430033	1	**C**
800	3072161430034	1,5	**C**
1000	3072161430035	2	**C**
1500	3072161430036	3	**C**
2000	3072161430037	4	**C**
3000	3072161430008	5	
4000	3072161430009	8	
5000	3072161430011	10	

Data have been calculated on following basis: Primary circuit at 80 °C, and proper energy source; Production of DHW in continue way from 10 °C to 45 °C; DHW that can be taken in the first 10' and in the first hour from storage at 60°C, input 10°C and output 45°C; Sanitary water according to UNI CTI 8065.
Even if tanks are tested to resist till max temperature, the local legislation has always to be observed during the use.

Model	Ignition Time	Output	Continous production of DHW	DHW produced in the first 10 Min.	DHW produced in the first hour	Primary flow rate	Exchanger pressure loss	
	[min]	[Kw]	[lt/h]	[lt/10']	[lt/60']	[m³/h]	[mm H_2O]	[mbar]
200	49	18	455	347	635	2	309	30,3
300	48	28	701	524	968	3	372	36,5
500	60	38	947	844	1443	4	419	41,1
800	59	59	1466	1301	2230	6	718	70,4
1000	54	86	2127	1776	3123	10	1380	135,3
1500	53	133	3290	2677	4761	15	2295	225,1
2000	52	180	4453	3564	6384	20	2996	293,8
3000	65	216	5361	5144	8539	20	2436	238,9
4000	57	330	8168	6918	12092	20	3896	382,1
5000	60	401	9921	8639	14923	20	4707	461,6

ACCESSORIES

"Easy Control" Electronic Display-mounted on tank

ART. NR.	FOR MODELS
5005000310002	WXC



Thermometer

Art. Nr.
5032240000107
5 units box



Titanium electronic anode

Art. Nr.	Model
5200000000008	200, 300
5200000000009	500, 800
5200000000011	1000, 1500
5200000000013	2000÷5000



P.E.D. product designed and produced in conformity to the article 4.3 of directive 2014/68/UE - ErP Ecodesgin directive 2009/125/CE

EXTRA **1 HORIZONTAL**

POLYWARM® COATED CALORIFIERS WITH 1 STAINLESS STEEL EXTRACTABLE HEAT EXCHANGER

STORAGE		HEAT EXCHANGER	
Pmax	Tmax	Pmax	Tmax
8 bar	90 °C	12 bar	110 °C

CORDIVARI Lab

TÜV Rheinland Energie und Umwelt GmbH states that test procedures and Cordivari LAB are certified conforming to European standard EN 15332, as indicated by Ecodesign ErP Directive.

TESTED ErP

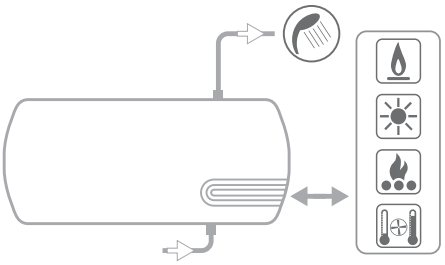

See TECHNICAL SUPPORT chapter for example of installation

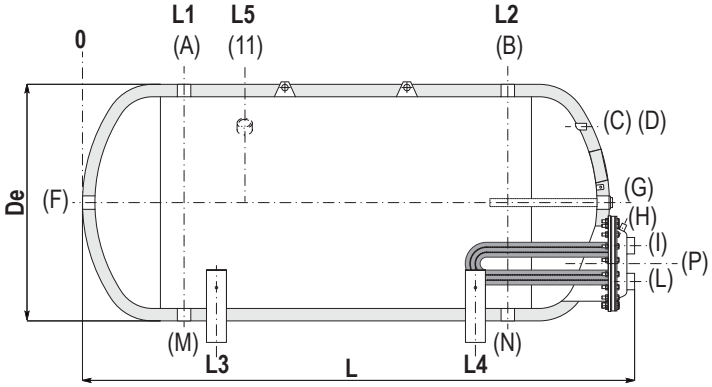

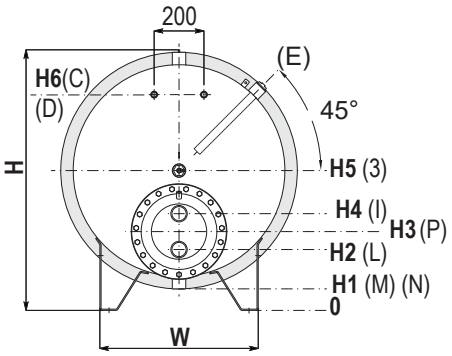

A	Domestic hot water outlet
B	Recirculation
C-D	Connection for instrumentation 1/2" F
E	Connection for 2nd magnesium anode 1"1/4 F (only for models > 1500)
G	Connection for magnesium anode
H	Heat exchanger drain 3/8" F
I	Primary circuit inlet
L	Primary circuit outlet
M-N	Domestic water inlet / Drain
P	Heat exchanger flange

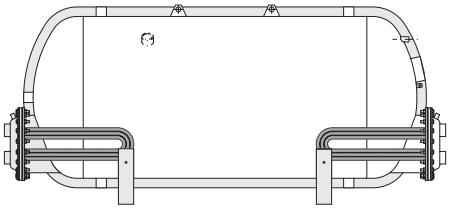

VERSION WITH 2 EXTRACTABLE HEAT EXCHANGERS IS AVAILABLE UPON REQUEST

Model	Volume	De	L	H	L1	L2	L3	L4	L5	H1
	[lt]	[mm]								
200	191	670	1594	693	344	1144	409	1079	//	43
300	292	770	1645	849	370	1170	440	1100	//	99
500	500	870	1934	946	395	1445	490	1350	//	96
800	795	970	2251	1042	425	1725	555	1595	//	92
1000	1045	1070	2281	1137	458	1758	588	1628	//	87
1500	1498	1210	2651	1240	474	2024	629	1869	//	90
2000	2064	1360	2706	1380	520	2070	660	1930	908	80
3000	2997	1350	2956	1524	495	2295	695	2095	945	154
4000	4184	1550	3066	1707	560	2360	665	2255	1010	137
5000	5131	1700	3107	1845	583	2383	783	2183	1033	125

Model	H2	H3	H4	H5	H6	W	P	L-I	C-D	B	A-M-N	E
	[mm]							Connections F				
200	243	293	343	368	498	364	Øi220/Øe300	1"	1/2''	1''1/4	1''1/4	-
300	336	386	436	474	668	404	Øi220/Øe300	1"	1/2''	1''1/4	1''1/4	-
500	383	433	483	521	715	455	Øi220/Øe300	1"	1/2''	1''1/4	1''1/4	-
800	348	438	528	567	817	583	Øi300/Øe380	2''	1/2''	1''1/4	1''1/2	-
1000	277	367	457	612	917	644	Øi300/Øe380	2''	1/2''	1''1/2	1''1/2	-
1500	315	405	495	665	1020	759	Øi300/Øe380	2''	1/2''	2''	2''	-
2000	330	435	540	730	1085	848	Øi350/Øe430	2''	1/2''	2''	2''	1''1/4
3000	324	429	534	829	1184	981	Øi350/Øe430	2''	1/2''	2''	2''	1''1/4
4000	307	412	517	912	1267	1101	Øi350/Øe430	2''	1/2''	2''	3''	1''1/4
5000	305	410	515	975	1330	1189	Øi350/Øe430	2''	1/2''	2''	3''	1''1/4

P.E.D. product designed and produced in conformity to the article 4.3 of directive 2014/68/UE - ErP Ecodesgin directive 2009/125/CE

EXTRA **1 VAPORE**

POLYWARM® COATED CALORIFIERS WITH 1 STAINLESS STEEL EXTRACTABLE HEAT EXCHANGER FOR STEAM GENERATOR



APPLICATION
Production and storage of sanitary hot water. Suitable for steam generators.
MATERIAL
Mild steel Polywarm® coated (Attestation ACS - SSICA - DVGW - W270 - WRAS)
HEAT EXCHANGER
Stainless steel 316L straight heat exchanger suitable for steam power (P.E.D. directive compliant).
INSULATION
- HARD: High thermal insulation with ecological polyurethane hard foam.
- SOFT: NOFIRE® polyester fleece 100% made of recyclable material, with high thermal insulation. Fire resistance class B-s2d0 according to EN 13501.

Grey PVC external lining.

CATHODE PROTECTION
Magnesium anode. Models > 1500 n° 2 magnesium anodes.
DRAIN
External confluence through drain connection. Models > 1000 external confluence through drain pipe.
GASKET- FLANGE PLATE
Asbestos-free fiber gaskets.
Mild steel exchanger head with anticorrosion treatment.
WARRANTY
5 years - See general sales conditions and warranty
ACCESSORIES AND SPARE PARTS
See Accessories section for the entire list.

POLYWARM® COATED DHW STORAGE

316L STAINLESS STEEL HEAT EXCHANGER

STOCK AVAILABILITY

EXTRA 1 VAPORE WXB

Model	HARD FOAM insulation	STAINLESS STEEL 316L HEAT EXCHANGER SURFACE	ENERGY EFFICIENCY CLASS
	Art. Nr.	[m²]	
500	3069162360123	1	**C**
800	3069162360124	1,5	**B**
1000	3069162360125	2	**C**
1500	3069162360126	3	**C**
2000	3069162360127	3	**B**



cordivari.com/erp



On line ErP label tool

EXTRA 1 VAPORE WXC

Model	DISMOUNTABLE SOFT FLEECE insulation	STAINLESS STEEL 316L HEAT EXCHANGER SURFACE	ENERGY EFFICIENCY CLASS
	Art. Nr.	[m²]	
500	3069162360133	1	**C**
800	3069162360134	1,5	**C**
1000	3069162360135	2	**C**
1500	3069162360136	3	**C**
2000	3069162360137	3	**C**
2500	3069162360111	3	
3000	3069162360108	3	
4000	3069162360109	4	
5000	3069162360110	5	

HEAT EXCHANGERS FOR STEAM GENERATOR TECHNICAL DATA

Model	PED	Heat exchangers performance calculated with primary circuit at 6 bar saturated steam and production of DHW from 10° to 45°C				Heat exchangers performance calculated with primary circuit at 3 bar saturated steam and production of DHW from 10° to 45°C			
		Output	DHW production		Ignition time	Output	DHW production		Ignition time
		[KW]	[l/h]	[l/10']	[min]	[KW]	[l/h]	[l/10']	[min]
500	Art. 4.3	141	3464	1189	9	114	2793	1077	11
800	Cat. I	212	5196	1869	9	171	4189	1701	12
1000	Cat. I	282	6928	2463	9	227	5585	2239	11
1500	Cat. I	423	10393	3554	9	341	8378	3218	11
2000	Cat. I	423	10393	4228	12	341	8378	3892	15
2500	Cat. I	423	10393	4571	13	341	8378	4235	17
3000	Cat. I	423	10393	5438	17	341	8378	5102	22
4000	Cat. I	564	13857	7031	17	455	11171	6583	21
5000	Cat. I	705	17321	9097	17	568	13963	8537	22

ACCESSORIES

"Easy Control" Electronic Display-mounted on tank

ART. NR.	FOR MODELS
5005000310002	WXC
5005000310003	WXB



Thermometer

Art. Nr.
5032240000107
5 units box



Titanium electronic anode

Art. Nr.	Model
5200000000009	500, 800
5200000000011	1000, 1500
5200000000013	2000÷5000



P.E.D. product designed and produced in conformity to the article 4.3 of directive 2014/68/UE - ErP Ecodesgin directive 2009/125/CE

EXTRA **1 VAPORE**

POLYWARM® COATED CALORIFIERS WITH 1 STAINLESS STEEL EXTRACTABLE HEAT EXCHANGER FOR STEAM GENERATOR

	STORAGE		HEAT EXCHANGER	
Model	Pmax	Tmax	Pmax	Tmax
500 ÷ 1000	8 bar	90 °C	6 bar	165 °C
1500 ÷ 5000	6 bar			

CORDIVARI Lab

TÜV Rheinland Energie und Umwelt GmbH states that test procedures and Cordivari LAB are certified conforming to European standard EN 15332, as indicated by Ecodesign ErP Directive.

TESTED ErP

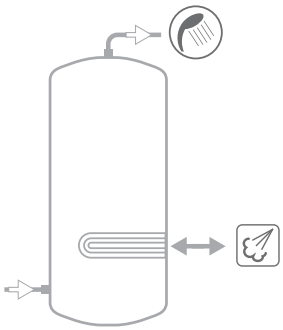

See TECHNICAL SUPPORT chapter for example of installation

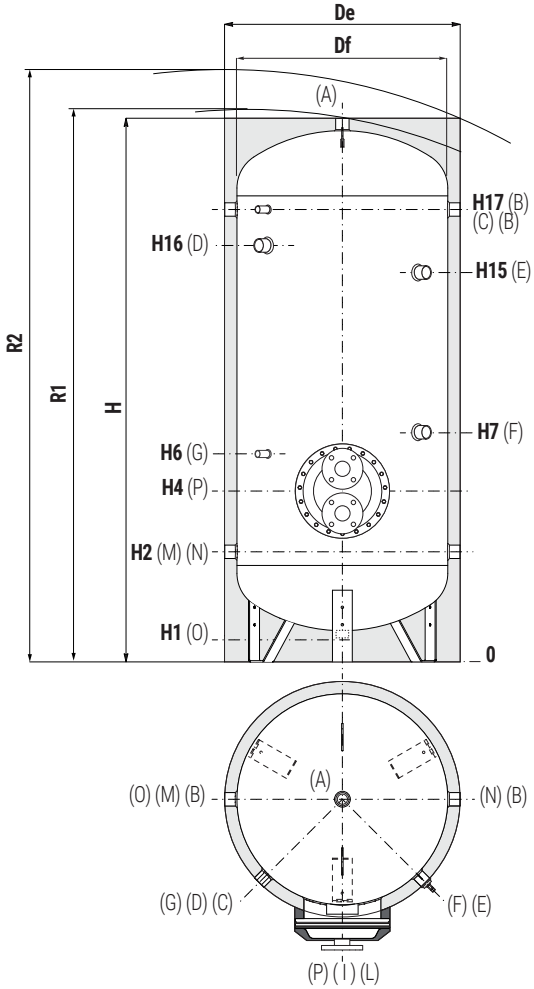

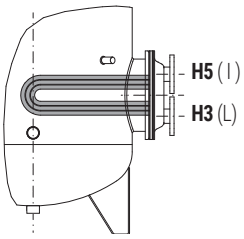

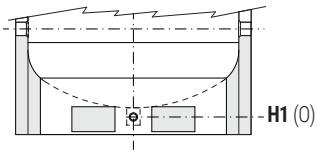

Models from 1500 to 5000 have two gripps on the bottom which allow the use of forklift when handling and drain pipe already fitted.

A	Domestic hot water outlet
B	Recirculation / Domestic hot water outlet
C	Connection for instrumentation 1/2" F
D	Connection for electric immersion heater 1" 1/2 F For models > 800 connection 2" F
E	Connection for 2nd magnesium anode 1"1/4 F (only for models > 1000)
F	Connection for magnesium anode 1" 1/4 F
G	Connection for instrumentation 1/2" F
I	Steam circuit inlet
L	Outlet for condense
M	Domestic cold water circuit inlet
N	Alternative domestic cold water circuit inlet or connection for more boilers
O	Drain 1" 1/4 F For model 800 connection 1" 1/2 F
O	Drain 1" F (only for models > 1500)
P	Heat exchanger flange

EXTRA 1 VAPORE WXB - HARD FOAM INSULATION

Model	Vol.	Weight	De	H	R2	H1	H2	H3	H4	H5	H6	H7	H15	H16	H17	P	B-N M	I-L	A
	[lt]	[kg]	[mm]														Connections F		
500	500	99	750	1800	1960	85	375	410	460	510	570	760	//	1329	1485	Øi220/Øe300	1"1/4	DN25 PN16	1"1/4
800	794	161	900	2135	2330	85	405	450	540	630	690	870	//	1610	1765	Øi300/Øe380	1"1/4	DN50 PN16	1"1/4
1000	1042	204	1000	2221	2450	105	458	503	593	683	743	993	//	1664	1818	Øi300/Øe380	1"1/4	DN50 PN16	1"1/2
1500	1445	250	1100	2415	2660	109	440	485	575	665	725	1075	//	1895	2050	Øi300/Øe380	1"1/2	DN50 PN16	1"1/2
2000	1977	288	1300	2492	2820	91	467	602	692	782	867	842	1952	1877	2057	Øi300/Øe380	2"	DN50 PN16	2"

EXTRA 1 VAPORE WXC - DISMOUNTABLE SOFT FLEECE INSULATION

Model	Vol.	Weight	De	Df	H	R1	R2	H1	H2	H3	H4	H5	H6	H7	H15	H16	H17	P	B-N M	I-L	A
	[lt]	[kg]	[mm]																Connections F		
500	500	90	870	650	1891	1870	2090	126	416	451	501	551	611	801	//	1370	1526	Øi220/Øe300	1"1/4	DN25 PN16	1"1/4
800	794	161	970	750	2188	2220	2400	113	433	478	568	658	718	898	//	1638	1793	Øi300/Øe380	1"1/4	DN50 PN16	1"1/4
1000	1042	204	1070	850	2242	2270	2490	101	454	499	589	679	739	989	//	1660	1814	Øi300/Øe380	1"1/4	DN50 PN16	1"1/4
1500	1445	250	1210	950	2440	2495	2730	109	440	485	575	665	725	1075	//	1895	2050	Øi300/Øe380	1"1/4	DN50 PN16	1"1/2
2000	1977	288	1360	1100	2492	2570	2850	91	467	602	692	782	867	842	1952	1877	2057	Øi350/Øe430	1"1/2	DN50 PN16	1"1/2
2500	2312	331	1350	1250	2311	2480	2690	140	551	686	776	866	951	976	1816	1732	1891	Øi350/Øe430	2"	DN50 PN16	2"
3000	2918	377	1350	1250	2811	2950	3130	140	551	686	776	866	951	1036	2316	2232	2391	Øi350/Øe430	2"	DN50 PN16	2"
4000	3769	530	1500	1400	2875	3050	3250	114	570	690	795	900	970	1035	2315	2238	2410	Øi350/Øe430	2"	DN50 PN16	2"
5000	4982	663	1700	1600	2915	3130	3380	94	580	700	805	910	980	1035	2335	2265	2420	Øi350/Øe430	2"	DN50 PN16	2"

P.E.D. product designed and produced in conformity to the article 4.3 of directive 2014/68/UE - ErP Ecodesgin directive 2009/125/CE

EXTRA **2 VAPORE**

POLYWARM® COATED CALORIFIERS WITH 2 STAINLESS STEEL EXTRACTABLE HEAT EXCHANGERS FOR STEAM GENERATOR



APPLICATION
Production and storage of sanitary hot water. Suitable for steam generators.
MATERIAL
Mild steel Polywarm® coated (Attestation ACS - SSICA - DVGW - W270 - WRAS)
HEAT EXCHANGER
2x Stainless steel 316L straight heat exchanger suitable for steam power (P.E.D. directive compliant).
INSULATION (DISMOUNTABLE)
NOFIRE® polyester fleece 100% made of recyclable material, with high thermal insulation. Fire resistance class B-s2d0 according to EN 13501. Grey PVC external lining.
CATHODE PROTECTION
N° 2 magnesium anodes.
DRAIN
External confluence through drain connection.
GASKET- FLANGE PLATE
Asbestos-free fiber gaskets.
Mild steel exchanger head with anticorrosion treatment.
WARRANTY
5 years - See general sales conditions and warranty
ACCESSORIES AND SPARE PARTS
See Accessories section for the entire list.

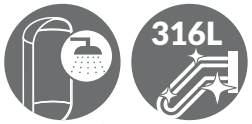

POLYWARM® COATED DHW STORAGE

316L STAINLESS STEEL HEAT EXCHANGER





On line ErP label tool



EXTRA 2 VAPORE WXC

Model	DISMOUNTABLE SOFT FLEECE insulation	STAINLESS STEEL 316L HEAT EXCHANGER SURFACE Lower	Middle
	Art. Nr.	[m²]	
3000	3069162363008	3	3
4000	3069162363009	4	4
5000	3069162363010	5	5

HEAT EXCHANGERS FOR STEAM GENERATOR TECHNICAL DATA

HEAT EXCHANGER	Model	PED	Heat exchangers performances calculated with primary circuit at 6 bar saturated steam and production of DHW from 10° to 45°C				Heat exchangers performances calculated with primary circuit at 3 bar saturated steam and production of DHW from 10° to 45°C			
			Output	DHW production		Ignition time	Output	DHW production		Ignition time
			[KW]	[l/h]	[l/10']	[min]	[KW]	[l/h]	[l/10']	[min]
Middle	**3000**	Cat. I	423	10393	4098	11	341	8378	3762	14
	4000	Cat. I	564	13857	5349	11	455	11171	4902	13
	5000	Cat. I	705	17321	6907	11	568	13963	6347	14
Lower	**3000**	Cat. I	423	10393	5438	17	341	8378	5102	22
	4000	Cat. I	564	13857	7031	17	455	11171	6583	21
	5000	Cat. I	705	17321	9097	17	568	13963	8537	22

ACCESSORIES

"Easy Control" Electronic Display-mounted on tank

ART. NR.	FOR MODELS
5005000310002	WXC



Thermometer

Art. Nr.
5032240000107
5 units box



Titanium electronic anode

Art. Nr.	Model
5200000000013	3000÷5000

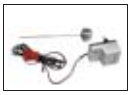

P.E.D. product designed and produced in conformity to the article 4.3 of directive 2014/68/UE - ErP Ecodesgin directive 2009/125/CE

EXTRA **2 VAPORE**

POLYWARM® COATED CALORIFIERS WITH 2 STAINLESS STEEL EXTRACTABLE HEAT EXCHANGERS FOR STEAM GENERATOR

STORAGE		HEAT EXCHANGER	
Pmax	Tmax	Pmax	Tmax
6 bar	90 °C	6 bar	165 °C

CORDIVARI Lab

TÜV Rheinland Energie und Umwelt GmbH states that test procedures and Cordivari LAB are certified conforming to European standard EN 15332, as indicated by Ecodesign ErP Directive.

TESTED ErP

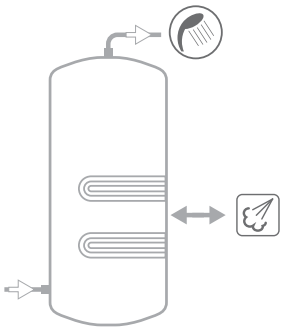

See TECHNICAL SUPPORT chapter for example of installation

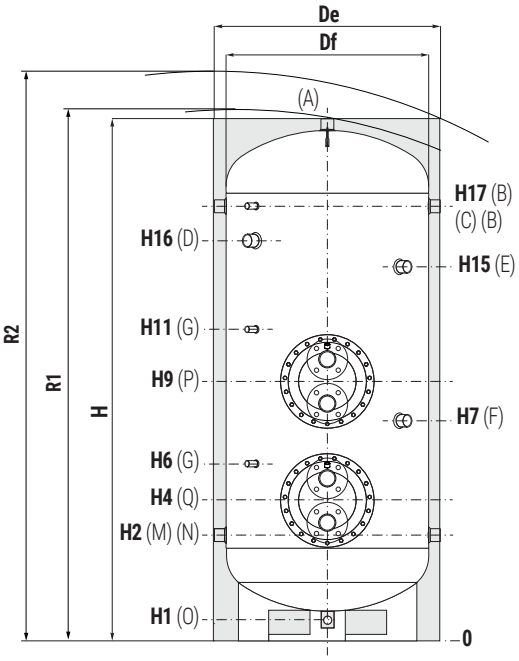

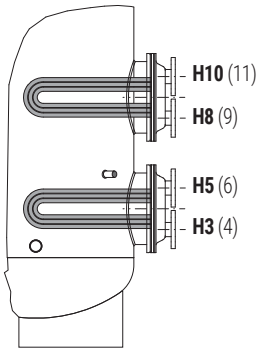

Tanks have two gripps on the bottom which allow the use of forklift when handling and drain pipe already fitted.

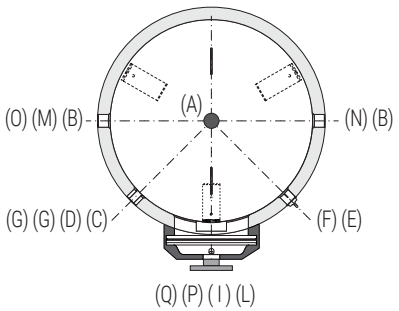

A	Domestic hot water outlet 2" F
B	Recirculation / Domestic hot water outlet 2" F
C	Connection for instrumentation 1/2" F
D	Connection for electric immersion heater 2" F
E	Connection for 2nd magnesium anode 1"1/4 F
F	Connection for magnesium anode 1"1/4 F
G	Connection for instrumentation 1/2" F
I	Steam circuit inlet DN50 PN16
L	Outlet for condense DN50 PN16
M	Domestic cold water circuit inlet 2" F
N	Alternative domestic cold water circuit inlet or connection for more boilers 2" F
O	Drain 1" F
P	Upper heat exchanger flange
Q	Lower heat exchanger flange

Model	Volume	Weight	De	Df	H	R1	R2	H1	H2	H3	H4	H5	H6	H7
	[lt]	[Kg]	[mm]											
3000	2923	440	1350	1250	2811	2950	3130	140	551	686	776	866	951	1036
4000	3776	620	1500	1400	2875	3050	3250	114	570	690	795	900	970	1035
5000	4990	763	1700	1600	2915	3130	3380	94	580	700	805	910	980	1035

Model	H8	H9	H10	H11	H15	H16	H17	P-Q
	[mm]							
3000	1386	1476	1566	1651	2316	2232	2391	Øi300/Øe380
4000	1390	1495	1600	1670	2315	2238	2410	Øi350/Øe430
5000	1400	1505	1610	1680	2335	2265	2420	Øi350/Øe430

P.E.D. product designed and produced in conformity to the article 4.3 of directive 2014/68/UE - ErP Ecodesgin directive 2009/125/CE

EXTRA **1 PLUS**

POLYWARM® COATED CALORIFIERS WITH 1 EXTRACTABLE FINNED COPPER HEAT EXCHANGER



APPLICATION
Production and storage of domestic hot water (DHW).
MATERIAL
Mild steel Polywarm® coated (Attestation ACS - SSICA - DVGW - W270 - WRAS)
HEAT EXCHANGER
1 copper finned and tinned heat exchanger.
INSULATION
- HARD: High thermal insulation with ecological polyurethane hard foam.
- SOFT: NOFIRE® polyester fleece 100% made of recyclable material, with high thermal insulation. Fire resistance class B-s2d0 according to EN 13501.

Grey PVC external lining.

CATHODE PROTECTION
Magnesium anode. Models > 1500 n° 2 magnesium anodes.
DRAIN
External confluence through drain connection. Models > 1000 external confluence through drain pipe.
GASKET- FLANGE PLATE
Silicone gaskets suitable for water intended for human consumption (tested according to 98/83/CE), max temperature up to 200°C. Mild steel inspection flange plate with Polywarm®.
WARRANTY
5 years - See general sales conditions and warranty
ACCESSORIES AND SPARE PARTS
See Accessories section for the entire list.

POLYWARM® COATED DHW STORAGE

STOCK AVAILABILITY

EXTRA 1 PLUS WRB

Model	HARD FOAM insulation Art. Nr.	HEAT EXCHANGER SURFACE [m²]	ENERGY EFFICIENCY CLASS
200	3074162352302	0,76	**B**
300	3074162352303	0,94	**C**
500	3074162352304	1,58	**C**
800	3074162352310	2,63	**B**
1000	3074162352311	3,17	**C**
1500	3074162352312	4,54	**C**
2000	3074162352313	5,26	**B**



cordivari.com/erp



On line ErP label tool

EXTRA 1 PLUS WRC

Model	DISMOUNTABLE SOFT FLEECE insulation Art. Nr.	HEAT EXCHANGER SURFACE [m²]	ENERGY EFFICIENCY CLASS
500	3072162352334	1,58	**C**
800	3072162352340	2,63	**C**
1000	3072162352341	3,17	**C**
1500	3072162352342	4,54	**C**
2000	3072162352343	5,26	**C**
2500	3072162352344	6,34	
3000	3072162352345	6,34	
4000	3072162352346	6,34	
5000	3072162352347	6,34	

ACCESSORIES

ELECTRIC IMMERSION HEATERS

Mod.	Heated volume by electric immersion heater [lt]	MONOPHASE 1,5 kW	MONOPHASE 2 kW	MONOPHASE 3 kW	THREEPHASE 4 kW	THREEPHASE 5 kW	THREEPHASE 6 kW	THREEPHASE 9 kW	THREEPHASE 12 kW
		5240000000051	5240000000052	5240000000053	5240000000047	5240000000048	5240000000049	5240000000050	5240000000031
		Ignition time from 10 °C to 45 °C with electric immersion heaters [min]			Ignition time from 10 °C to 45 °C with electric immersion heaters [min]				
200	49	87	65	44	//	//	//	//	//
300	76	136	102	68	//	//	//	//	//
500	127	228	171	114	//	//	//	//	//
800	178	318	239	159	//	//	//	//	//
1000	243	436	327	218	163	131	109	73	54
1500	288	516	387	258	194	155	129	86	65
2000	443	793	595	396	297	238	198	132	99
2500	577	1033	775	517	387	310	258	172	129
3000	577	1033	775	517	387	310	258	172	129
4000	797	1428	1071	714	535	428	357	238	178
5000	1040	1864	1398	932	699	559	466	311	233

"Easy Control" Electronic Display-mounted on tank

ART. NR.	FOR MODELS
5005000310002	WRC
5005000310003	WRB



Thermometer

Art. Nr.	
5032240000107	
5 units box	



Titanium electronic anode

Art. Nr.	Model
5200000000008	200, 300
5200000000009	500, 800
5200000000011	1000, 1500
5200000000013	2000÷5000



P.E.D. product designed and produced in conformity to the article 4.3 of directive 2014/68/UE - ErP Ecodesgin directive 2009/125/CE

EXTRA **1 PLUS**

POLYWARM® COATED CALORIFIERS WITH 1 EXTRACTABLE FINNED COPPER HEAT EXCHANGER

	STORAGE		HEAT EXCHANGER	
Model	Pmax	Tmax	Pmax	Tmax
200 ÷ 1000	8 bar	90 °C	12 bar	110 °C
1500 ÷ 5000	6 bar			

CORDIVARI Lab

TÜV Rheinland Energie und Umwelt GmbH states that test procedures and Cordivari LAB are certified conforming to European standard EN 15332, as indicated by Ecodesign ErP Directive.

TESTED ErP

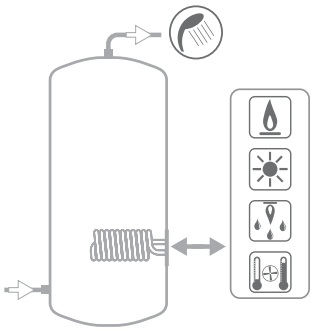

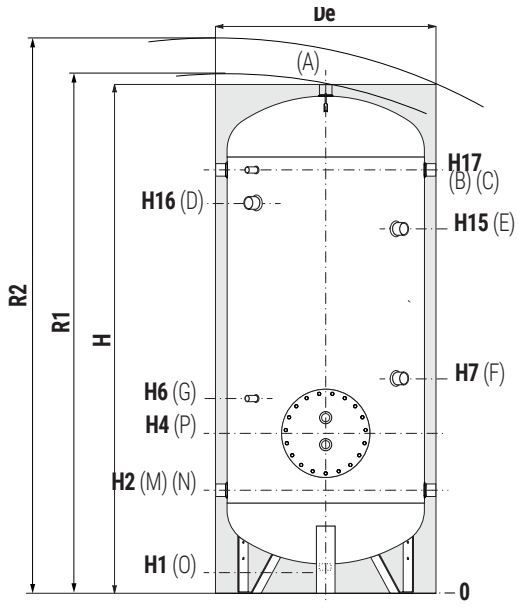

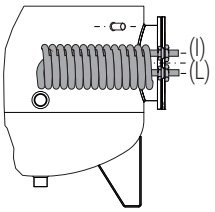

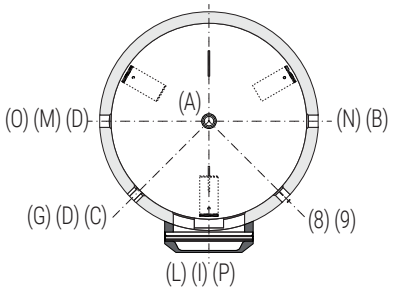

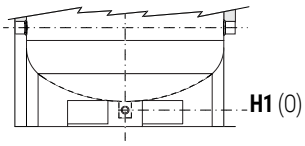

Models from 1500 to 5000 have two gripps on the bottom which allow the use of forklift when handling and drain pipe already fitted.

A	Domestic hot water outlet
B	Recirculation / Domestic hot water outlet
C	Connection for instrumentation 1/2" F
D	Connection for electric immersion heater 1" 1/2 F For models > 800 connection 2" F
E	Connection for 2nd magnesium anode 1"1/4 F (only for models > 1500)
F	Connection for magnesium anode 1" 1/4 F
G	Connection for instrumentation 1/2" F
I	Primary circuit inlet
L	Primary circuit outlet
M	Domestic cold water circuit inlet
N	Alternative domestic cold water circuit inlet or connection for more boilers
O	Drain 1" 1/4 F For model 1000 connection 1"1/2 F
O	Drain 1" F (only for models > 1000)
P	Heat exchanger flange

EXTRA 1 PLUS WRB - HARD FOAM INSULATION

Model	Volume	De	H	R2	H1	H2	H4	H6	H7	H15	H16	H17	P	B-M-N	A
	[lt]	[mm]												Connections F	
200	191	550	1449	1560	85	325	410	520	650	//	1075	1185	Øi220/Øe300	1"1/4	1"1/4
300	292	650	1499	1640	85	350	435	545	735	//	1100	1210	Øi220/Øe300	1"1/4	1"1/4
500	500	750	1800	1960	85	375	460	570	760	//	1329	1485	Øi220/Øe300	1"1/4	1"1/4
800	791	900	2135	2330	85	405	490	600	870	//	1610	1765	Øi300/Øe380	1"1/4	1"1/4
1000	1040	1000	2221	2450	105	458	543	653	993	//	1664	1818	Øi300/Øe380	1"1/2	1"1/2
1500	1442	1100	2415	2660	109	440	525	635	1075	//	1895	2050	Øi300/Øe380	1"1/2	2"
2000	1974	1300	2492	2820	91	467	542	652	842	1952	1877	2057	Øi350/Øe430	2"	2"

EXTRA 1 PLUS WRC - DISMOUNTABLE SOFT FLEECE INSULATION

Model	Volume	De	Df	H	R1	R2	H1	H2	H4	H6	H7	H15	H16	H17	P	B-M-N	A
	[lt]	[mm]														Connections F	
500	500	870	650	1841	1998	2090	101	416	501	611	801	//	1370	1526	Øi220/Øe300	1"1/4	1"1/4
800	791	970	750	2188	2220	2400	113	433	518	628	898	//	1638	1793	Øi300/Øe380	1"1/4	1"1/4
1000	1040	1070	850	2242	2270	2490	101	454	539	649	989	//	1660	1814	Øi300/Øe380	1"1/2	1"1/2
1500	1442	1210	950	2440	2495	2730	109	440	525	635	1075	//	1895	2050	Øi300/Øe380	1"1/2	2"
2000	1974	1360	1100	2492	2570	2850	91	467	542	652	842	1952	1877	2057	Øi350/Øe430	2"	2"
2500	2310	1350	1250	2311	2480	2690	140	551	626	736	976	1816	1732	1891	Øi350/Øe430	2"	2"
3000	2916	1350	1250	2811	2950	3130	140	551	626	736	876	2316	2232	2391	Øi350/Øe430	2"	2"
4000	3764	1500	1400	2875	3050	3250	114	570	645	755	895	2315	2238	2410	Øi350/Øe430	2"	2"
5000	4978	1700	1600	2915	3130	3380	94	580	655	765	935	2335	2265	2420	Øi350/Øe430	2"	2"

P.E.D. product designed and produced in conformity to the article 4.3 of directive 2014/68/UE - ErP Ecodesgin directive 2009/125/CE

CORDIVARI

EXTRA **1 PLUS**

HEAT EXCHANGERS TECHNICAL DATA



Data have been calculated on following basis:
1) Primary circuit at T1 and proper energy source;
2) Production of DHW in continuous way from 10 °C at t2;
3) DHW that can be taken in the first 10' and in the first hour from storage at 60°C, input 10°C and output 45°C;
4) Sanitary water according to UNI CTI 8065.

LOWER
HEAT EXCHANGER

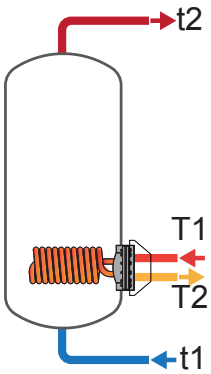

Model	Primary Flow rate	Ignition time (minutes) from 10 °C to t2 and primary at T1				Maximum power exchange (kW) with primary at T1, secondary within 10-45 °C and constant use of DHW production				DHW continuous production lt/h within 10-45 °C and primary at T1			
	[m³/h]	T1/t2				T1				T1			
		55/50	65/60	70/60	80/60	55	65	70	80	55	65	70	80
200	1,4	95	97	65	40	7	11	13,9	19	171	226	342	470
	0,7	106	107	72	45	6	10	12	17	161	262	315	427
300	1,4	119	118	79	49	8,7	14,4	17,4	24	214	353	428	586
	0,7	130	131	87	54	8,3	13,4	16,1	21	203	329	396	535
500	1,4	132	132	89	55	14,1	22,9	27,6	37,4	347	565	680	923
	0,7	150	151	103	65	13	21	25	33	321	509	606	809
800	1,4	137	138	94	59	23	36	44	56	562	900	1076	1443
	0,7	164	167	115	73	21	32	38	49	510	789	931	1222
1000	1,4	154	155	105	67	27	43	51	68	668	1062	1265	1688
	0,7	187	191	132	85	24	37	44	57	602	921	1082	1409
1500	3	139	140	95	59	40	65	77	104	988	1594	1910	2577
	1,5	162	164	113	72	37	57	68	90	906	1417	1678	2218
2000	3	168	169	115	72	46	74	88	118	1133	1820	2177	2925
	1,5	199	202	139	89	42	65	77	101	1033	1605	1895	2493
2500	3	163	164	112	71	55	87	104	139	1349	2150	2564	3428
	1,5	197	200	139	102	50	76	89	117	1221	1876	2206	2881
3000	3	214	216	147	93	55	87	104	139	1349	2150	2564	3428
	1,5	258	263	181	117	50	76	89	117	1221	1876	2206	2881
4000	3	274	276	187	118	55	87	104	139	1349	2150	2564	3428
	1,5	330	337	232	149	50	76	89	117	1221	1876	2206	2881
5000	3	361	364	247	156	55	87	104	139	1349	2150	2564	3428
	1,5	436	445	305	196	50	76	89	117	1221	1876	2206	2881

Model	Primary Flow rate	DHW produced in the first 10 minutes in lt/10' input 10 °C output 45 °C, storage at t2 and primary at T1				DHW produced in the first hour in lt/60' input 10 °C output 45 °C, storage at t2 and primary at T1				Heat exchanger pressure loss	
	[m³/h]	T1/t2				T1/t2				[mm H_2O]	[mbar]
		55/50	65/60	70/60	80/60	55/50	65/60	70/60	80/60		
200	1,4	211	266	286	307	320	409	502	605	895	87,8
	0,7	210	272	281	300	312	438	481	570	223	21,9
300	1,4	313	406	418	445	449	630	690	816	1936	189,9
	0,7	312	402	413	436	440	610	664	775	484	47,5
500	1,4	547	706	725	765	767	1063	1155	1350	1861	182,5
	0,7	543	696	712	746	746	1019	1096	1259	465	45,6
800	1,4	896	1153	1182	1243	1252	1723	1864	2157	3097	303,7
	0,7	887	1134	1158	1207	1210	1634	1748	1980	774	75,9
1000	1,4	1158	1486	1519	1590	1581	2158	2321	2659	3733	366,1
	0,7	1147	1462	1489	1543	1528	2045	2174	2436	933	91,5
1500	3	1622	2087	2140	2251	2248	3097	3349	3883	2878	282,2
	1,5	1608	2058	2101	2191	2182	2955	3164	3596	720	70,6
2000	3	2185	2799	2859	2983	2903	3952	4237	4836	2878	282,2
	1,5	2169	2763	2812	2911	2823	3780	4012	4490	720	70,6
2500	3	2496	3197	3266	3410	3350	4559	4890	5581	4588	449,9
	1,5	2474	3151	3206	3319	3248	4339	4603	5143	1147	112,5
3000	3	3189	4064	4133	4277	4044	5426	5757	6448	5530	542,3
	1,5	3168	4018	4073	4186	3941	5207	5471	6011	1382	135,5
4000	3	4002	5080	5149	5293	4856	6441	6773	7464	5530	542,3
	1,5	3981	5034	5089	5202	4754	6222	6486	7026	1382	135,5
5000	3	5193	6568	6637	6781	6047	7930	8261	8952	5530	542,3
	1,5	5172	6523	6578	6690	5945	7711	7975	8515	1382	135,5

EXTRA **1 PLUS**

HEAT EXCHANGERS PRESSURE LOSS



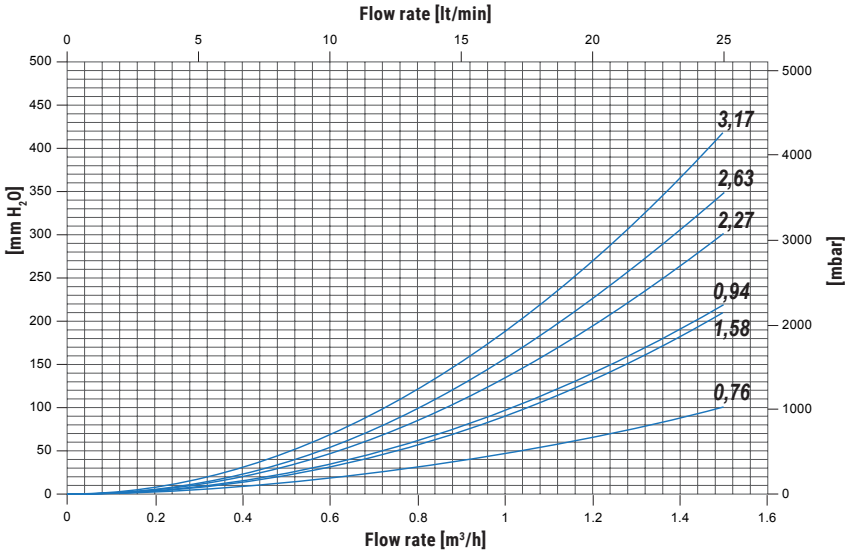

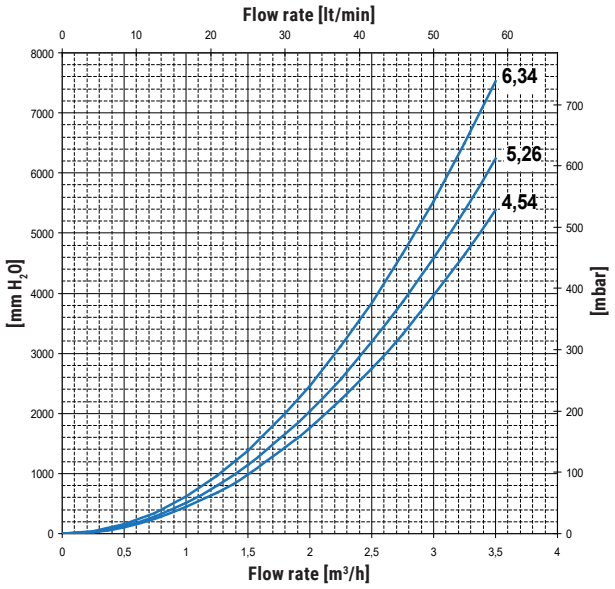

EXAMPLE OF INSTALLATION WITH **EXTRA 1 PLUS**

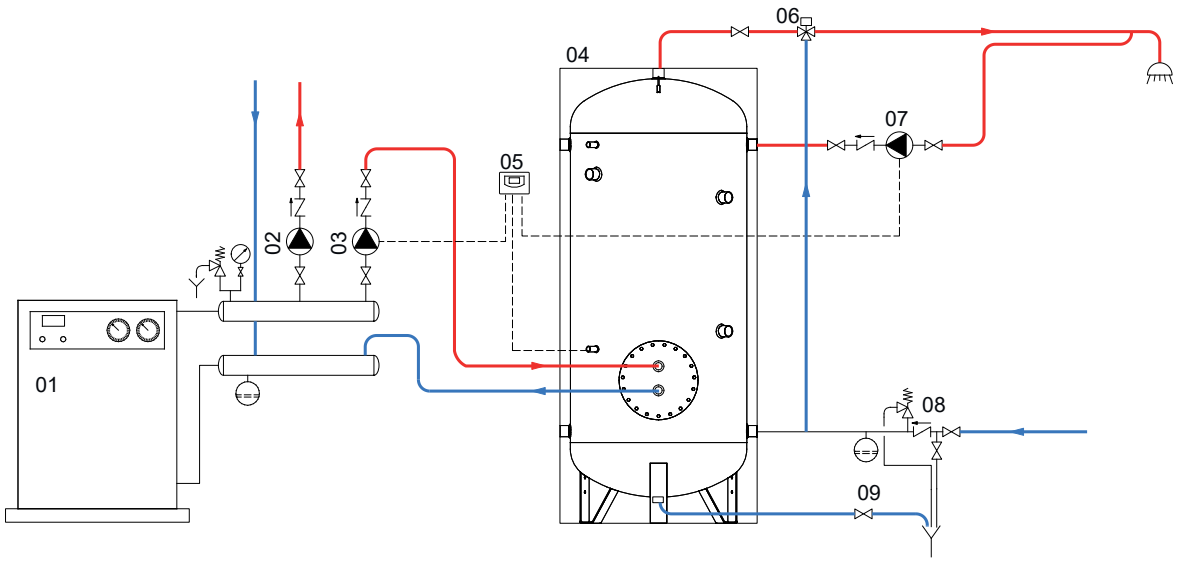

1	Generator	04	EXTRA 1 PLUS	07	DHW recirculation group
2	Heating system circulation group	05	Easy Control electronic display/ thermostat	08	Hydraulic safety group
3	D.H.W. circulation group	06	Thermostatic mixing valve	09	Blowdown valve

EXTRA **2 PLUS**

POLYWARM® COATED CALORIFIERS WITH 2 EXTRACTABLE FINNED COPPER HEAT EXCHANGERS



APPLICATION
Production and storage of domestic hot water (DHW).
MATERIAL
Mild steel Polywarm® coated (Attestation ACS - SSICA - DVGW - W270 - WRAS)
HEAT EXCHANGER
2 copper finned and tinned heat exchangers.
INSULATION
- HARD: High thermal insulation with ecological polyurethane hard foam.
- SOFT: NOFIRE® polyester fleece 100% made of recyclable material, with high thermal insulation. Fire resistance class B-s2d0 according to EN 13501.

Grey PVC external lining.

CATHODE PROTECTION
Magnesium anode. Models > 1500 n° 2 magnesium anodes.
DRAIN
External confluence through drain connection. Models > 1000 external confluence through drain pipe.
GASKET- FLANGE PLATE
Silicone gaskets suitable for water intended for human consumption (tested according to 98/83/CE), max temperature up to 200°C. Mild steel inspection flange plate with Polywarm®.
WARRANTY
5 years - See general sales conditions and warranty
ACCESSORIES AND SPARE PARTS
See Accessories section for the entire list.

POLYWARM® COATED DHW STORAGE

EXTRA 2 PLUS WRB

Model	HARD FOAM insulation	HEAT EXCHANGER SURFACE Lower	Middle	ENERGY EFFICIENCY CLASS
	Art. Nr.	[m²]		
200	3084162352301	0,76	0,76	**B**
300	3084162352302	0,94	0,76	**C**
500	3084162352303	1,58	0,76	**C**
800	3084162352310	2,63	0,94	**B**
1000	3084162352311	3,17	1,58	**C**
1500	3084162352312	4,54	2,63	**C**
2000	3084162352313	5,26	3,17	**B**



cordivari.com/erp



On line ErP label tool

EXTRA 2 PLUS WRC

Model	DISMOUNTABLE SOFT FLEECE insulation	HEAT EXCHANGER SURFACE Lower	Middle	ENERGY EFFICIENCY CLASS
	Art. Nr.	[m²]		
500	3082162352333	1,58	0,76	**C**
800	3082162352340	2,63	0,94	**C**
1000	3082162352341	3,17	1,58	**C**
1500	3082162352342	4,54	2,63	**C**
2000	3082162352343	5,26	3,17	**C**
2500	3082162352344	6,34	4,54	
3000	3082162352345	6,34	5,26	
4000	3082162352346	6,34	6,34	
5000	3082162352347	6,34	6,34	

ACCESSORIES

ELECTRIC IMMERSION HEATERS

Mod.	Heated volume by electric immersion heater [lt]	MONOPHASE **1,5** kW	**2** kW	**3** kW	THREEPHASE **4** kW	**5** kW	**6** kW	**9** kW	**12** kW
		5240000000051	5240000000052	5240000000053	5240000000047	5240000000048	5240000000049	5240000000050	5240000000031
		Ignition time from 10 °C to 45 °C with electric immersion heaters [min]			Ignition time from 10 °C to 45 °C with electric immersion heaters [min]				
200	49	87	65	44	//	//	//	//	//
300	76	136	102	68	//	//	//	//	//
500	127	228	171	114	//	//	//	//	//
800	178	318	239	159	//	//	//	//	//
1000	243	436	327	218	163	131	109	73	54
1500	288	516	387	258	194	155	129	86	65
2000	443	793	595	396	297	238	198	132	99
2500	577	1033	775	517	387	310	258	172	129
3000	577	1033	775	517	387	310	258	172	129
4000	797	1428	1071	714	535	428	357	238	178
5000	1040	1864	1398	932	699	559	466	311	233

"Easy Control" Electronic Display-mounted on tank

ART. NR.	FOR MODELS
5005000310002	WXC
5005000310003	WXB



Thermometer

Art. Nr.
5032240000107
5 units box



Titanium electronic anode

Art. Nr.	Model
5200000000008	200, 300
5200000000009	500, 800
5200000000011	1000, 1500
5200000000013	2000÷5000



P.E.D. product designed and produced in conformity to the article 4.3 of directive 2014/68/UE - ErP Ecodesgin directive 2009/125/CE

EXTRA **2 PLUS**

POLYWARM® COATED CALORIFIERS WITH 2 EXTRACTABLE FINNED COPPER HEAT EXCHANGERS

	STORAGE		HEAT EXCHANGER	
Model	Pmax	Tmax	Pmax	Tmax
200 ÷ 1000	8 bar	90 °C	12 bar	110 °C
1500 ÷ 5000	6 bar			

CORDIVARI Lab

TÜV Rheinland Energie und Umwelt GmbH states that test procedures and Cordivari LAB are certified conforming to European standard EN 15332, as indicated by Ecodesign ErP Directive.

TESTED ErP

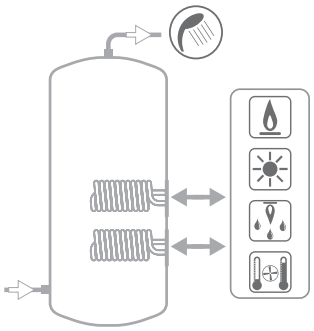

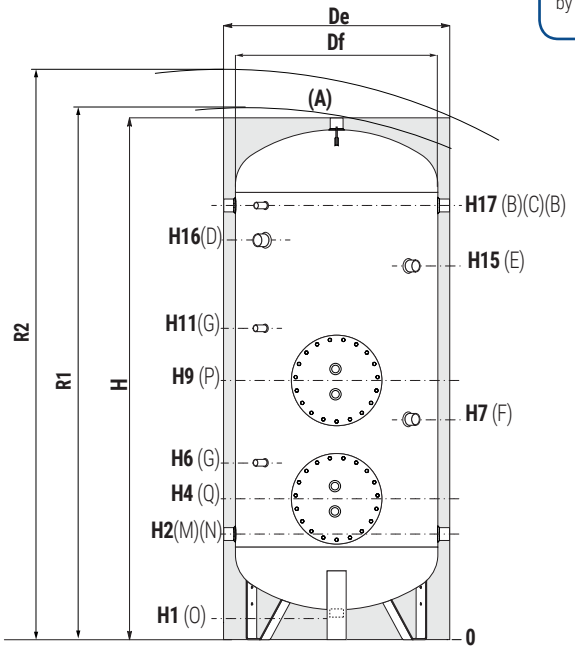

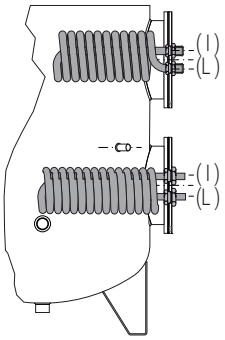

A	Domestic hot water outlet
B	Recirculation / Domestic hot water outlet
C-G	Connection for instrumentation 1/2" F
E	Connection for 2nd magnesium anode 1"1/4 F (only for models > 1500)
F	Connection for magnesium anode 1"1/4 F
I	Primary circuit inlet scambiatore
L	Primary circuit outlet scambiatore
M	Domestic cold water circuit inlet
N	Alternative domestic cold water circuit inlet or connection for more boilers
O	Drain 1" F
P	Upper heat exchanger flange
Q	Lower heat exchanger flange

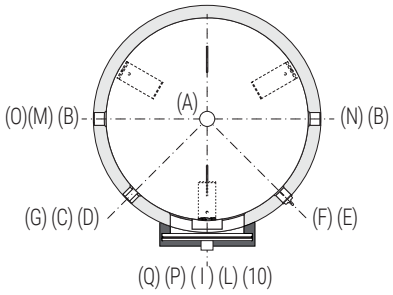

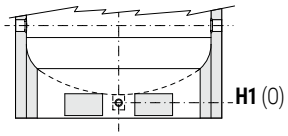

Models from 1500 to 5000 have two gripps on the bottom which allow the use of forklift when handling and drain pipe already fitted.

EXTRA 2 PLUS WRB - HARD FOAM INSULATION

Model	Volume	De	H	R2	H1	H2	H4	H6	H7	H9	H11	H15	H16	H17	P Q	A	B M N
	[lt]	[mm]														Connections F	
200	193	550	1449	1560	85	325	410	520	650	860	970	//	1075	1185	Øi220/Øe300	1"1/4	1"1/4
300	295	650	1499	1640	85	350	435	545	735	885	995	//	1100	1210	Øi220/Øe300	1"1/4	1"1/4
500	503	750	1800	1960	85	375	460	570	760	910	1020	//	1329	1485	Øi220/Øe300	1"1/4	1"1/4
800	794	900	2135	2330	85	405	540	690	870	1090	1240	//	1610	1765	Øi300/Øe380	1"1/4	1"1/4
1000	1043	1000	2221	2450	105	458	593	743	993	1143	1293	//	1664	1818	Øi300/Øe380	1"1/2	1"1/2
1500	1445	1100	2415	2660	109	440	675	825	1075	1250	1400	//	1895	2050	Øi300/Øe380	2"	1"1/2
2000	1977	1300	2492	2820	91	467	692	867	842	1262	1437	1952	1877	2057	Øi350/Øe430	2"	2"

EXTRA 2 PLUS WRC - DISMOUNTABLE SOFT FLEECE INSULATION

Model	Volume	De	Df	H	R1	R2	H1	H2	H4	H6	H7	H9	H11	H15	H16	H17	P Q	A	B M N
	[lt]	[mm]																Connections F	
500	503	870	650	1841	1990	2090	101	416	501	611	801	951	1061	//	1370	1526	Øi220/Øe300	1"1/4	1"1/4
800	794	970	750	2188	2220	2400	113	433	518	628	898	1118	1228	//	1638	1793	Øi300/Øe380	1"1/4	1"1/4
1000	1043	1070	850	2242	2270	2490	101	454	539	649	989	1139	1249	//	1660	1814	Øi300/Øe380	1"1/2	1"1/2
1500	1445	1210	950	2440	2495	2730	109	440	525	635	1075	1250	1360	//	1895	2050	Øi300/Øe380	2"	1"1/2
2000	1977	1360	1100	2492	2570	2850	91	467	542	652	842	1262	1372	1952	1877	2057	Øi350/Øe430	2"	2"
2500	2313	1350	1250	2311	2480	2690	140	551	626	736	876	1201	1311	1816	1732	1891	Øi350/Øe430	2"	2"
3000	2919	1350	1250	2811	2950	3130	140	551	626	736	876	1476	1586	2316	2232	2391	Øi350/Øe430	2"	2"
4000	3767	1500	1400	2875	3050	3250	114	570	645	755	895	1495	1605	2315	2238	2410	Øi350/Øe430	2"	2"
5000	4981	1700	1600	2915	3130	3380	94	580	655	765	935	1505	1615	2335	2265	2420	Øi350/Øe430	2"	2"

P.E.D. product designed and produced in conformity to the article 4.3 of directive 2014/68/UE - ErP Ecodesgin directive 2009/125/CE

EXTRA **2 PLUS**

HEAT EXCHANGERS TECHNICAL DATA



Data have been calculated on following basis:
1) Primary circuit at T1 and proper energy source;
2) Production of DHW in continuous way from 10 °C at t2;
3) DHW that can be taken in the first 10' and in the first hour from storage at 60°C, input 10°C and output 45°C;
4) Sanitary water according to UNI CTI 8065.

UPPER
HEAT EXCHANGER

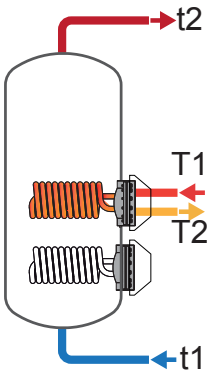

Model	Primary Flow rate	Ignition time (minutes) from 10 °C to t2 and primary at T1				Maximum power exchange (kW) with primary at T1, secondary within 10-45 °C and constant use of DHW production				DHW continuous production lt/h within 10-45 °C and primary at T1			
	[m³/h]	T1/t2				T1				T1			
		55/50	65/60	70/60	80/60	55	65	70	80	55	65	70	80
200	1,4	58	58	39	24	7	11	14	19	171	226	342	470
	0,7	64	64	43	27	6	10	12	17	161	262	315	427
300	1,4	89	89	59	36	7	11	14	19	171	226	342	470
	0,7	96	96	64	40	6	10	12	17	161	262	315	427
500	1,4	175	175	115	70	7	11	14	19	171	226	342	470
	0,7	192	193	127	79	6	10	12	17	161	262	315	427
800	1,4	247	248	162	99	9	14	17	24	214	353	428	586
	0,7	274	276	182	112	8	13	16	21	203	329	396	535
1000	1,4	187	187	125	77	14	23	28	37,4	347	565	680	923
	0,7	213	216	145	91	13	21	25	33	321	509	606	809
1500	1,4	168	170	115	72	23	36	44	56	562	900	1076	1443
	0,7	204	208	142	91	21	32	38	49	510	789	931	1222
2000	1,4	201	203	138	87	27	43	51	68	668	1062	1265	1688
	0,7	249	254	174	112	24	37	44	57	602	921	1082	1409
2500	3	126	126	85	53	40	65	77	104	988	1594	1910	2577
	1,5	146	148	102	65	37	57	68	90	906	1417	1678	2218
3000	3	160	161	109	69	46	74	88	118	1133	1820	2177	2925
	1,5	190	193	132	85	42	65	77	101	1033	1605	1895	2493
4000	3	176	178	121	76	55	87	104	139	1349	2150	2564	3428
	1,5	212	217	149	96	50	76	89	117	1221	1876	2206	2881
5000	3	234	236	160	101	55	87	104	139	1349	2150	2564	3428
	1,5	282	288	198	127	50	76	89	117	1221	1876	2206	2881

Model	Primary Flow rate	DHW produced in the first 10 minutes in lt/10' input 10 °C output 45 °C, storage at t2 and primary at T1				DHW produced in the first hour in lt/60' input 10 °C output 45 °C, storage at t2 and primary at T1				Heat exchanger pressure loss	
	[m³/h]	T1/t2				T1/t2				[mm H_2O]	[mbar]
		55/50	65/60	70/60	80/60	55/50	65/60	70/60	80/60		
200	1,4	138	175	194	215	247	318	411	513	895	87,8
	0,7	137	181	190	208	239	347	389	479	223	21,9
300	1,4	198	249	268	290	306	392	485	587	895	87,8
	0,7	196	255	264	283	298	421	463	553	223	21,9
500	1,4	351	441	460	481	459	584	676	779	895	87,8
	0,7	349	447	455	474	451	612	655	744	223	21,9
800	1,4	589	750	763	789	724	974	1034	1160	1936	189,9
	0,7	587	746	757	781	716	955	1008	1119	484	47,5
1000	1,4	744	951	970	1011	963	1309	1401	1596	1861	182,5
	0,7	739	942	958	992	943	1264	1342	1504	465	45,6
1500	1,4	1033	1324	1354	1415	1389	1894	2035	2329	3097	303,7
	0,7	1024	1306	1329	1378	1347	1805	1919	2152	774	75,9
2000	1,4	1422	1816	1849	1920	1845	2488	2651	2989	3733	366,1
	0,7	1411	1792	1819	1873	1792	2375	2504	2766	933	91,5
2500	3	1472	1900	1953	2064	2098	2909	3162	3696	2878	282,2
	1,5	1458	1870	1914	2004	2032	2768	2977	3409	720	70,6
3000	3	2081	2669	2729	2853	2799	3822	4107	4706	2878	282,2
	1,5	2065	2633	2682	2781	2719	3650	3882	4360	720	70,6
4000	3	2657	3398	3467	3611	3511	4760	5091	5782	5530	542,3
	1,5	2636	3353	3408	3520	3409	4541	4805	5345	1382	135,5
5000	3	3441	4378	4447	4591	4295	5740	6071	6762	5530	542,3
	1,5	3420	4333	4388	4500	4193	5521	5785	6325	1382	135,5

EXTRA **2 PLUS**

HEAT EXCHANGERS TECHNICAL DATA



LOWER
HEAT EXCHANGER

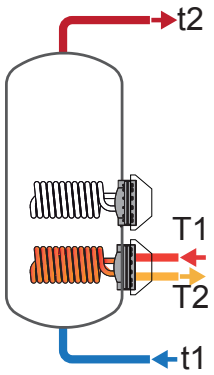

Model	Primary Flow rate	Ignition time (minutes) from 10 °C to t2 and primary at T1				Maximum power exchange (kW) with primary at T1, secondary within 10-45 °C and constant use of DHW production				DHW continuous production lt/h within 10-45 °C and primary at T1			
	[m³/h]	T1/t2				T1				T1			
		55/50	65/60	70/60	80/60	55	65	70	80	55	65	70	80
200	1,4	95	97	65	40	7	11	13,9	19	171	226	342	470
	0,7	106	107	72	45	6	10	12	17	161	262	315	427
300	1,4	119	118	79	49	8,7	14,4	17,4	24	214	353	428	586
	0,7	130	131	87	54	8,3	13,4	16,1	21	203	329	396	535
500	1,4	132	132	89	55	14,1	22,9	27,6	37,4	347	565	680	923
	0,7	150	151	103	65	13	21	25	33	321	509	606	809
800	1,4	137	138	94	59	23	36	44	56	562	900	1076	1443
	0,7	164	167	115	73	21	32	38	49	510	789	931	1222
1000	1,4	154	155	105	67	27	43	51	68	668	1062	1265	1688
	0,7	187	191	132	85	24	37	44	57	602	921	1082	1409
1500	1,4	139	140	95	59	40	65	77	104	988	1594	1910	2577
	0,7	162	164	113	72	37	57	68	90	906	1417	1678	2218
2000	1,4	168	169	115	72	46	74	88	118	1133	1820	2177	2925
	0,7	199	202	139	89	42	65	77	101	1033	1605	1895	2493
2500	3	163	164	112	71	55	87	104	139	1349	2150	2564	3428
	1,5	197	200	139	102	50	76	89	117	1221	1876	2206	2881
3000	3	214	216	147	93	55	87	104	139	1349	2150	2564	3428
	1,5	258	263	181	117	50	76	89	117	1221	1876	2206	2881
4000	3	274	276	187	118	55	87	104	139	1349	2150	2564	3428
	1,5	330	337	232	149	50	76	89	117	1221	1876	2206	2881
5000	3	361	364	247	156	55	87	104	139	1349	2150	2564	3428
	1,5	436	445	305	196	50	76	89	117	1221	1876	2206	2881

Model	Primary Flow rate	DHW produced in the first 10 minutes in lt/10' input 10 °C output 45 °C, storage at t2 and primary at T1				DHW produced in the first hour in lt/60' input 10 °C output 45 °C, storage at t2 and primary at T1				Heat exchanger pressure loss	
	[m³/h]	T1/t2				T1/t2				[mm H_2O]	[mbar]
		55/50	65/60	70/60	80/60	55/50	65/60	70/60	80/60		
200	1,4	211	266	286	307	320	409	502	605	895	87,8
	0,7	210	272	281	300	312	438	481	570	223	21,9
300	1,4	313	406	418	445	449	630	690	816	1936	189,9
	0,7	312	402	413	436	440	610	664	775	484	47,5
500	1,4	547	706	725	765	767	1063	1155	1350	1861	182,5
	0,7	543	696	712	746	746	1019	1096	1259	465	45,6
800	1,4	896	1153	1182	1243	1252	1723	1864	2157	3097	303,7
	0,7	887	1134	1158	1207	1210	1634	1748	1980	774	75,9
1000	1,4	1158	1486	1519	1590	1581	2158	2321	2659	3733	366,1
	0,7	1147	1462	1489	1543	1528	2045	2174	2436	933	91,5
1500	3	1622	2087	2140	2251	2248	3097	3349	3883	2878	282,2
	1,5	1608	2058	2101	2191	2182	2955	3164	3596	720	70,6
2000	3	2185	2799	2859	2983	2903	3952	4237	4836	2878	282,2
	1,5	2169	2763	2812	2911	2823	3780	4012	4490	720	70,6
2500	3	2496	3197	3266	3410	3350	4559	4890	5581	4588	449,9
	1,5	2474	3151	3206	3319	3248	4339	4603	5143	1147	112,5
3000	3	3189	4064	4133	4277	4044	5426	5757	6448	5530	542,3
	1,5	3168	4018	4073	4186	3941	5207	5471	6011	1382	135,5
4000	3	4002	5080	5149	5293	4856	6441	6773	7464	5530	542,3
	1,5	3981	5034	5089	5202	4754	6222	6486	7026	1382	135,5
5000	3	5193	6568	6637	6781	6047	7930	8261	8952	5530	542,3
	1,5	5172	6523	6578	6690	5945	7711	7975	8515	1382	135,5

EXAMPLE OF INSTALLATION WITH **EXTRA 2 PLUS**

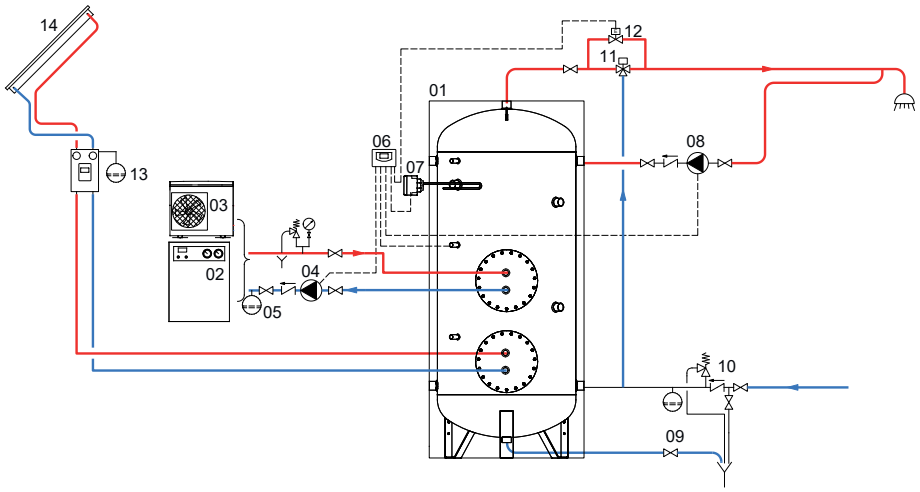

1	Extra 2 Plus	5	Expansion vessel	9	Blowdown valve	13	Solar system circulation group
2	generator	6	Easy Control electronic display/ thermostat	10	Hydraulic safety group	14	Solar panels
3	Heat pump generator	7	Electric immersion heater (optional)	11	Thermostatic mixing valve		
4	Circulation group	8	DHW recirculation group	12	By-pass solenoid valve		

EXTRA **3 PLUS**

POLYWARM® COATED CALORIFIERS WITH 3 EXTRACTABLE FINNED COPPER HEAT EXCHANGERS



APPLICATION
Production and storage of domestic hot water (DHW).
MATERIAL
Mild steel Polywarm® coated (Attestation ACS - SSICA - DVGW - W270 - WRAS)
HEAT EXCHANGER
3 copper finned and tinned heat exchangers.
INSULATION
- HARD: High thermal insulation with ecological polyurethane hard foam.
- SOFT: NOFIRE® polyester fleece 100% made of recyclable material, with high thermal insulation. Fire resistance class B-s2d0 according to EN 13501.

Grey PVC external lining.

CATHODE PROTECTION
Magnesium anode. Models > 1500 n° 2 magnesium anodes.
DRAIN
External confluence through drain connection.
GASKET- FLANGE PLATE
Silicone gaskets suitable for water intended for human consumption (tested according to 98/83/CE), max temperature up to 200°C. Mild steel inspection flange plate with Polywarm®.
WARRANTY
5 years - See general sales conditions and warranty
ACCESSORIES AND SPARE PARTS
See Accessories section for the entire list.

POLYWARM®
COATED
DHW STORAGE



cordivari.com/erp

On line ErP label tool

EXTRA 3 PLUS WRC

Model	DISMOUNTABLE SOFT FLEECE insulation	HEAT EXCHANGER SURFACE Lower	Middle	Upper	ENERGY EFFICIENCY CLASS
	Art. Nr.		[m²]		
500	3092162352340	1,58	0,76	0,76	C
1000	3092162352341	3,17	1,58	0,94	C
1500	3092162352342	4,54	2,63	1,58	C
2000	3092162352343	5,26	4,54	2,63	C
3000	3092162352345	6,34	5,26	3,17	
5000	3092162352347	6,34	6,34	5,26	

ACCESSORIES

"Easy Control" Electronic Display-mounted on tank

ART. NR.	FOR MODELS
5005000310002	WRC
5005000310003	WRB



Thermometer

Art. Nr.
5032240000107
5 units box



Titanium electronic anode

Art. Nr.	Model
5200000000011	1500
5200000000013	2000÷5000



P.E.D. product designed and produced in conformity to the article 4.3 of directive 2014/68/UE - ErP Ecodesgin directive 2009/125/CE

EXTRA **3 PLUS**

POLYWARM® COATED CALORIFIERS WITH 3 EXTRACTABLE FINNED COPPER HEAT EXCHANGERS

STORAGE		HEAT EXCHANGER	
Pmax	Tmax	Pmax	Tmax
6 bar	90 °C	12 bar	110 °C

CORDIVARI Lab

TÜV Rheinland Energie und Umwelt GmbH states that test procedures and Cordivari LAB are certified conforming to European standard EN 15332, as indicated by Ecodesign ErP Directive.

TESTED ErP

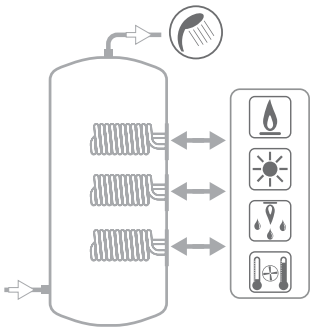

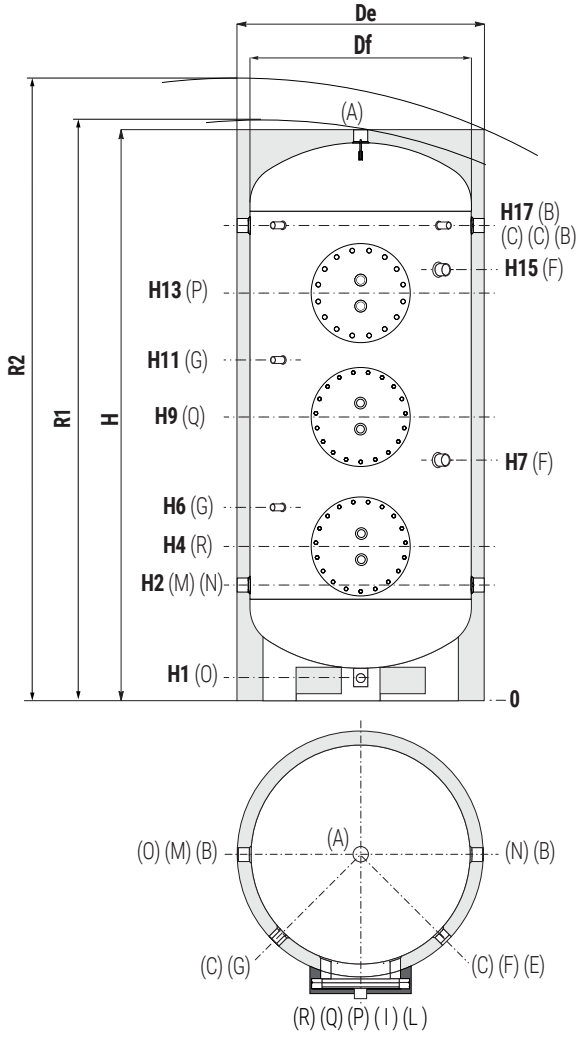

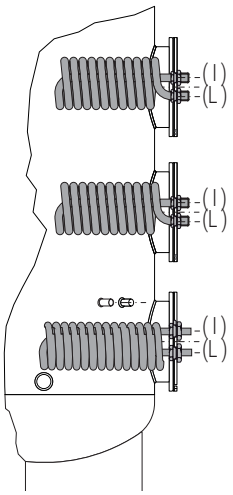

A	Domestic hot water outlet
B	Recirculation / Domestic hot water outlet 1" 1/2 F. For models > 1500 connection 2" F
C-G	Connection for instrumentation 1/2" F
E	Connection for 2nd magnesium anode 1"1/4 F (only for models > 1500)
F	Connection for magnesium anode 1"1/4 F
I	Primary circuit inlet scambiatore
L	Primary circuit outlet scambiatore
M	Domestic cold water circuit inlet
N	Alternative domestic cold water circuit inlet or connection for more boilers 1/2" F. For models > 1500 connection 2" F
O	Drain 1" F
P	Upper heat exchanger flange
Q	Middle heat exchanger flange
R	Lower heat exchanger flange

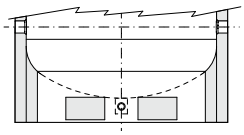

The calorifier have two gripps on the bottom which allow the use of forklift when handling and drain pipe already fitted.

Mod.	Vol.	Wei-ght	De	Df	H	R1	R2	H1	H2	H4	H6	H7
	[lt]	[kg]	[mm]									
500	500	120	870	650	1891	1990	2090	126	416	501	611	801
1000	1360	220	1070	850	2198	2240	3140	89	454	562	649	989
1500	1455	227	1210	950	2440	2495	2730	109	440	675	825	1075
2000	1991	278	1360	1100	2492	2570	2850	91	467	692	867	842
3000	2933	377	1350	1250	2811	2950	3130	140	551	836	1011	1036
5000	4996	634	1700	1600	2915	3130	3380	94	580	855	1030	1035

Mod.	H9	H11	H15	H16	H17	R-Q	P	A - B - M - N
	[mm]							Conn. F
500	951	1061	1401	//	1526	Øi220/Øe300	Øi220/Øe300	1"1/4
1000	1112	1249	1612	//	1760	Øi300/Øe380	Øi300/Øe380	1"1/2
1500	1250	1400	1875	//	2050	Øi300/Øe380	Øi300/Øe380	2"
2000	1262	1437	1817	1592	2057	Øi350/Øe430	Øi300/Øe380	2"
3000	1476	1651	2176	1926	2391	Øi350/Øe430	Øi300/Øe380	2"
5000	1505	1680	2115	1855	2420	Øi350/Øe430	Øi350/Øe430	2"

P.E.D. product designed and produced in conformity to the article 4.3 of directive 2014/68/UE - ErP Ecodesgin directive 2009/125/CE

EXTRA **3 PLUS**

HEAT EXCHANGERS TECHNICAL DATA



Data have been calculated on following basis:
1) Primary circuit at T1 and proper energy source;
2) Production of DHW in continuous way from 10 °C at t2;
3) DHW that can be taken in the first 10' and in the first hour from storage at 60°C, input 10°C and output 45°C;
4) Sanitary water according to UNI CTI 8065.

UPPER HEAT EXCHANGER

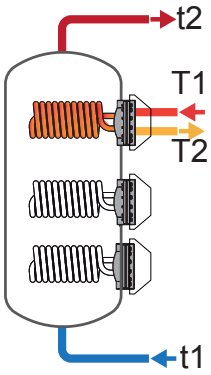

Model	Primary Flow rate	Ignition time (minutes) from 10 °C to t2 and primary at T1				Maximum power exchange (kW) with primary at T1, secondary within 10-45 °C and constant use of DHW production				DHW continuous production lt/h within 10-45 °C and primary at T1			
	[m³/h]	T1/t2				T1				T1			
		55/50	65/60	70/60	80/60	55	65	70	80	55	65	70	80
1500	1,4	122	122	81	50	14,1	22,9	27,6	37,4	562	900	1076	1443
	0,7	142	144	96	60	13	21	25	33	510	789	931	1222
2000	1,4	122	123	83	52	23	36	44	56	668	1062	1265	1688
	0,7	148	151	103	66	21	32	38	49	602	921	1082	1409
2500	1,4	116	116	77	48	23	36	44	56	988	1594	1910	2577
	0,7	130	132	90	57	21	32	38	49	906	1417	1678	2218
3000	3	117	117	78	48	40	65	77	104	1133	1820	2177	2925
	1,5	133	134	90	57	37	57	68	90	1033	1605	1895	2493
4000	3	111	112	75	47	40	65	77	104	1349	2150	2564	3428
	1,5	130	132	90	57	37	57	68	90	1221	1876	2206	2881
5000	3	154	156	105	66	46	74	88	118	1349	2150	2564	3428
	1,5	183	186	127	81	42	65	77	101	1221	1876	2206	2881

Model	Primary Flow rate	DHW produced in the first 10 minutes in lt/10' input 10 °C output 45 °C, storage at t2 and primary at T1				DHW produced in the first hour in lt/60' input 10 °C output 45 °C, storage at t2 and primary at T1				Heat exchanger pressure loss	
	[m³/h]	T1/t2				T1/t2				[mm H_2O]	[mbar]
		55/50	65/60	70/60	80/60	55/50	65/60	70/60	80/60		
1500	1,4	519	681	711	772	875	1251	1392	1686	1861	182,5
	0,7	510	663	687	735	833	1163	1276	1509	465	45,6
2000	1,4	787	1021	1055	1126	1210	1694	1856	2195	3097	303,7
	0,7	776	998	1025	1079	1157	1581	1710	1971	774	75,9
2500	1,4	893	1176	1228	1340	1518	2185	2438	2972	3097	303,7
	0,7	879	1146	1190	1280	1453	2044	2252	2684	774	75,9
3000	3	1061	1393	1453	1578	1778	2546	2832	3430	2878	282,2
	1,5	1044	1358	1406	1506	1698	2374	2606	3084	720	70,6
4000	3	1370	1790	1859	2003	2224	3151	3483	4174	2878	282,2
	1,5	1349	1744	1799	1912	2122	2932	3196	3736	720	70,6
5000	3	2033	2618	2687	2831	2887	3980	4311	5002	2878	282,2
	1,5	2012	2573	2628	2740	2785	3761	4025	4565	720	70,6

MIDDLE HEAT EXCHANGER

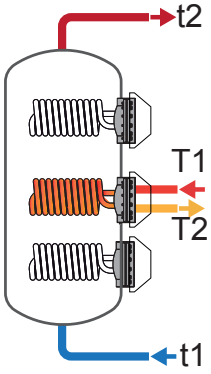

Model	Primary Flow rate	Ignition time (minutes) from 10 °C to t2 and primary at T1				Maximum power exchange (kW) with primary at T1, secondary within 10-45 °C and constant use of DHW production				DHW continuous production lt/h within 10-45 °C and primary at T1			
	[m³/h]	T1/t2				T1				T1			
		55/50	65/60	70/60	80/60	55	65	70	80	55	65	70	80
1500	1,4	168	170	115	72	23	36	44	56	562	900	1076	1443
	0,7	204	208	142	91	21	32	38	49	510	789	931	1222
2000	3	149	152	104	66	40	65	77	104	668	1062	1265	1688
	1,5	192	198	137	89	37	57	68	90	602	921	1082	1409
2500	3	126	126	85	53	40	65	77	104	988	1594	1910	2577
	1,5	146	148	102	65	37	57	68	90	906	1417	1678	2218
3000	3	160	161	109	69	46	74	88	118	1133	1820	2177	2925
	1,5	190	193	132	85	42	65	77	101	1033	1605	1895	2493
4000	3	207	208	141	88	46	74	88	118	1349	2150	2564	3428
	1,5	245	249	170	109	42	65	77	101	1221	1876	2206	2881
5000	3	234	236	160	101	55	87	104	139	1349	2150	2564	3428
	1,5	282	288	198	127	50	76	89	117	1221	1876	2206	2881

Model	Primary Flow rate	DHW produced in the first 10 minutes in lt/10' input 10 °C output 45 °C, storage at t2 and primary at T1				DHW produced in the first hour in lt/60' input 10 °C output 45 °C, storage at t2 and primary at T1				Heat exchanger pressure loss	
	[m³/h]	T1/t2				T1/t2				[mm H_2O]	[mbar]
		55/50	65/60	70/60	80/60	55/50	65/60	70/60	80/60		
1500	1,4	1033	1324	1354	1415	1389	1894	2035	2329	3097	303,7
	0,7	1024	1306	1329	1378	1347	1805	1919	2152	774	75,9
2000	3	1422	1816	1849	1920	1845	2488	2651	2989	2878	282,2
	1,5	1411	1792	1819	1873	1792	2375	2504	2766	720	70,6
2500	3	1472	1900	1953	2064	2098	2909	3162	3696	2878	282,2
	1,5	1458	1870	1914	2004	2032	2768	2977	3409	720	70,6
3000	3	2081	2669	2729	2853	2799	3822	4107	4706	2878	282,2
	1,5	2065	2633	2682	2781	2719	3650	3882	4360	720	70,6
4000	3	2657	3398	3467	3611	3511	4760	5091	5782	2878	282,2
	1,5	2636	3353	3408	3520	3409	4541	4805	5345	720	70,6
5000	3	3441	4378	4447	4591	4295	5740	6071	6762	5530	542,3
	1,5	3420	4333	4388	4500	4193	5521	5785	6325	1382	135,5

EXTRA **3 PLUS**

HEAT EXCHANGERS TECHNICAL DATA



Data have been calculated on following basis:
1) Primary circuit at T1 and proper energy source;
2) Production of DHW in continuous way from 10 °C at t2;
3) DHW that can be taken in the first 10' and in the first hour from storage at 60°C, input 10°C and output 45°C;
4) Sanitary water according to UNI CTI 8065.

LOWER
HEAT EXCHANGER

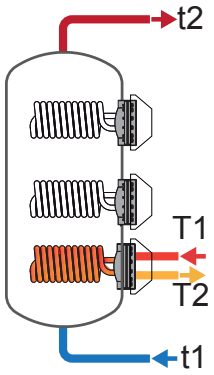

Model	Primary Flow rate	Ignition time (minutes) from 10 °C to t2 and primary at T1				Maximum power exchange (kW) with primary at T1, secondary within 10-45 °C and constant use of DHW production				DHW continuous production lt/h within 10-45 °C and primary at T1			
	[m³/h]	T1/t2				T1				T1			
		55/50	65/60	70/60	80/60	55	65	70	80	55	65	70	80
1500	3	139	140	95	59	40	65	77	104	988	1594	1910	2577
	1,5	162	164	113	72	37	57	68	90	906	1417	1678	2218
2000	3	168	169	115	72	46	74	88	118	1133	1820	2177	2925
	1,5	199	202	139	89	42	65	77	101	1033	1605	1895	2493
2500	3	163	164	112	71	55	87	104	139	1349	2150	2564	3428
	1,5	197	200	139	102	50	76	89	117	1221	1876	2206	2881
3000	3	214	216	147	93	55	87	104	139	1349	2150	2564	3428
	1,5	258	263	181	117	50	76	89	117	1221	1876	2206	2881
4000	3	274	276	187	118	55	87	104	139	1349	2150	2564	3428
	1,5	330	337	232	149	50	76	89	117	1221	1876	2206	2881
5000	3	361	364	247	156	55	87	104	139	1349	2150	2564	3428
	1,5	436	445	305	196	50	76	89	117	1221	1876	2206	2881

Model	Primary Flow rate	DHW produced in the first 10 minutes in lt/10' input 10 °C output 45 °C, storage at t2 and primary at T1				DHW produced in the first hour in lt/60' input 10 °C output 45 °C, storage at t2 and primary at T1				Heat exchanger pressure loss	
	[m³/h]	T1/t2				T1/t2				[mm H_2O]	[mbar]
		55/50	65/60	70/60	80/60	55/50	65/60	70/60	80/60		
1500	3	1622	2087	2140	2251	2248	3097	3349	3883	2878	282,2
	1,5	1608	2058	2101	2191	2182	2955	3164	3596	720	70,6
2000	3	2185	2799	2859	2983	2903	3952	4237	4836	2878	282,2
	1,5	2169	2763	2812	2911	2823	3780	4012	4490	720	70,6
2500	3	2496	3197	3266	3410	3350	4559	4890	5581	4588	449,9
	1,5	2474	3151	3206	3319	3248	4339	4603	5143	1147	112,5
3000	3	3189	4064	4133	4277	4044	5426	5757	6448	5530	542,3
	1,5	3168	4018	4073	4186	3941	5207	5471	6011	1382	135,5
4000	3	4002	5080	5149	5293	4856	6441	6773	7464	5530	542,3
	1,5	3981	5034	5089	5202	4754	6222	6486	7026	1382	135,5
5000	3	5193	6568	6637	6781	6047	7930	8261	8952	5530	542,3
	1,5	5172	6523	6578	6690	5945	7711	7975	8515	1382	135,5



Heat exchanger surface [m²]:
0,76 - 0,94 - 1,58 - 2,63 - 3,17

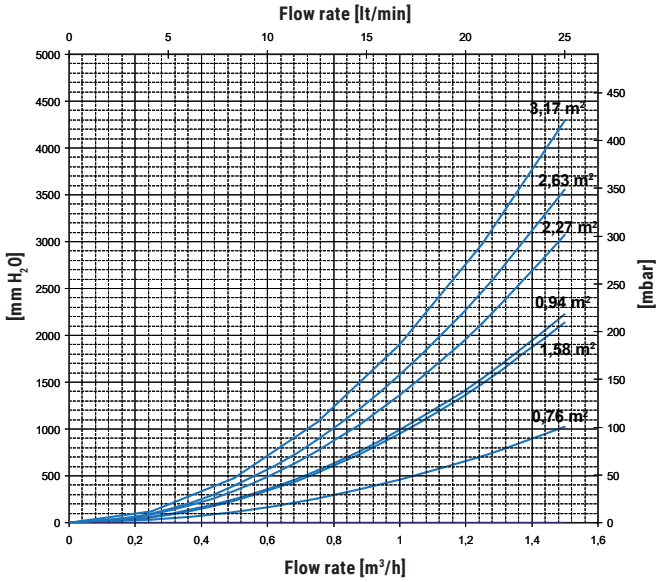

Heat exchanger surface [m²]:
4,54 - 5,26 - 6,34

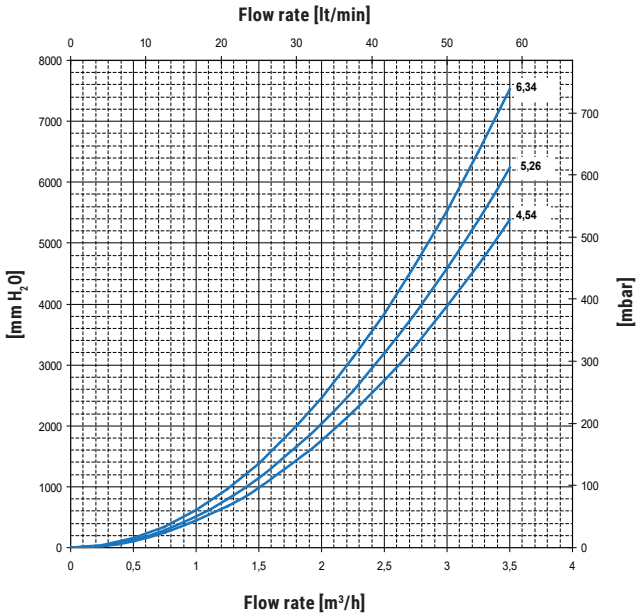

EXTRA **3 PLUS**
HEAT EXCHANGERS TECHNICAL DATA

Heat Exchanger output referred to temperature and flow rate of primary circuit and with secondary at 10/45°C at maximum withdrawal of producible DHW (Upper limit of the curves referred to maximum primary flow rate in the heat exchanger, while the lower limit in the curve refers to the minimum primary flow rate)

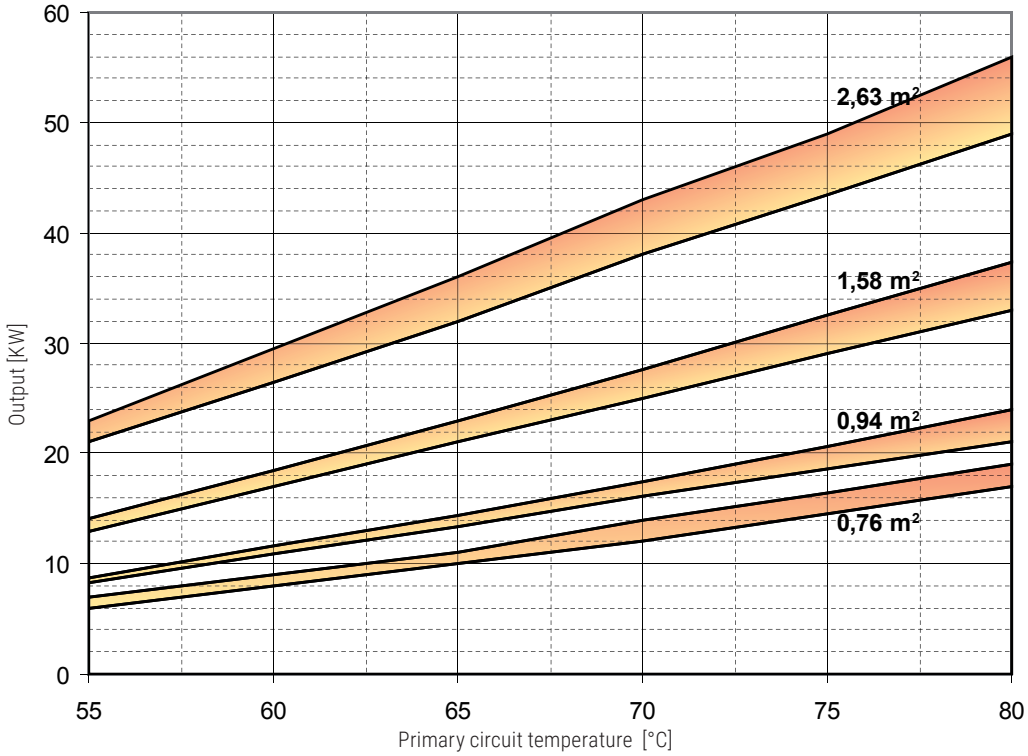

Heat excchanger surface	0,76 m²		0,94 m²		1,58 m²		2,63 m²	
Flow rate [m³/h]	MAX	MIN	MAX	MIN	MAX	MIN	MAX	MIN
	1,4	0,7	1,4	0,7	1,4	0,7	1,4	0,7

EXTRA **3 PLUS**

HEAT EXCHANGERS TECHNICAL DATA



Heat Exchanger output referred to temperature and flow rate of primary circuit and with secondary at 10/45°C at maximum withdrawal of producible DHW (Upper limit of the curves referred to maximum primary flow rate in the heat exchanger, while the lower limit in the curve refers to the minimum primary flow rate)

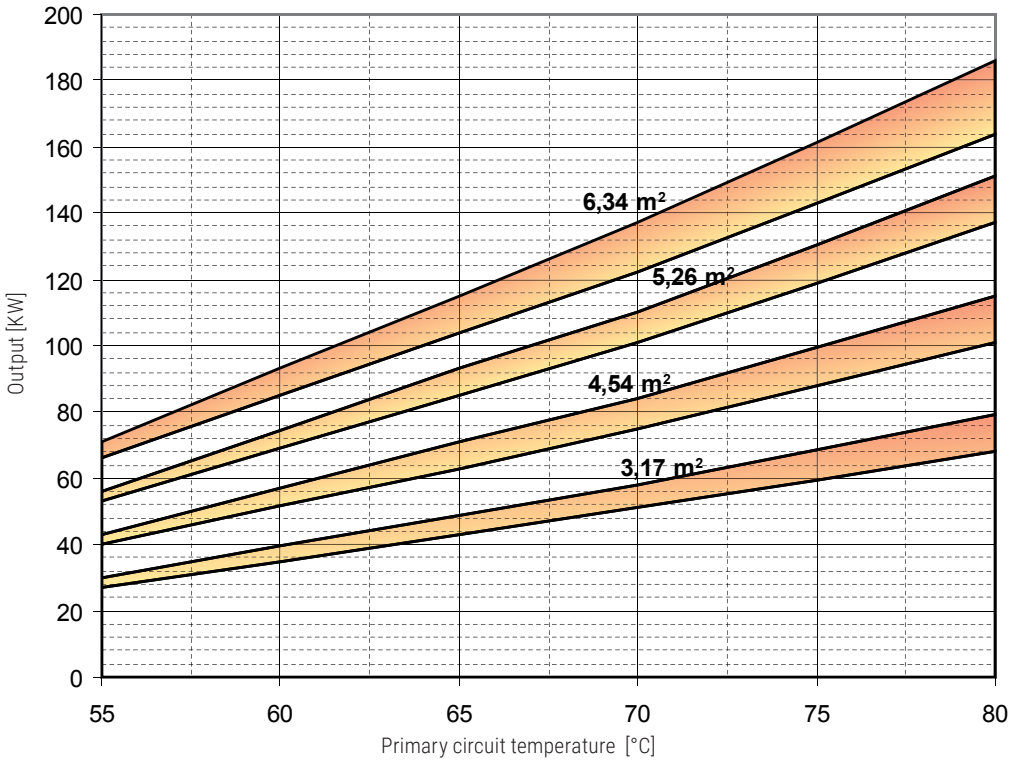

Heat excchanger surface	3,17 m²		4,54 m²		5,26 m²		6,34 m²	
Flow rate [m³/h]	MAX	MIN	MAX	MIN	MAX	MIN	MAX	MIN
	1,4	0,7	3	1,5	3	1,5	3	1,5

EXAMPLE OF INSTALLATION WITH **EXTRA 3 PLUS**

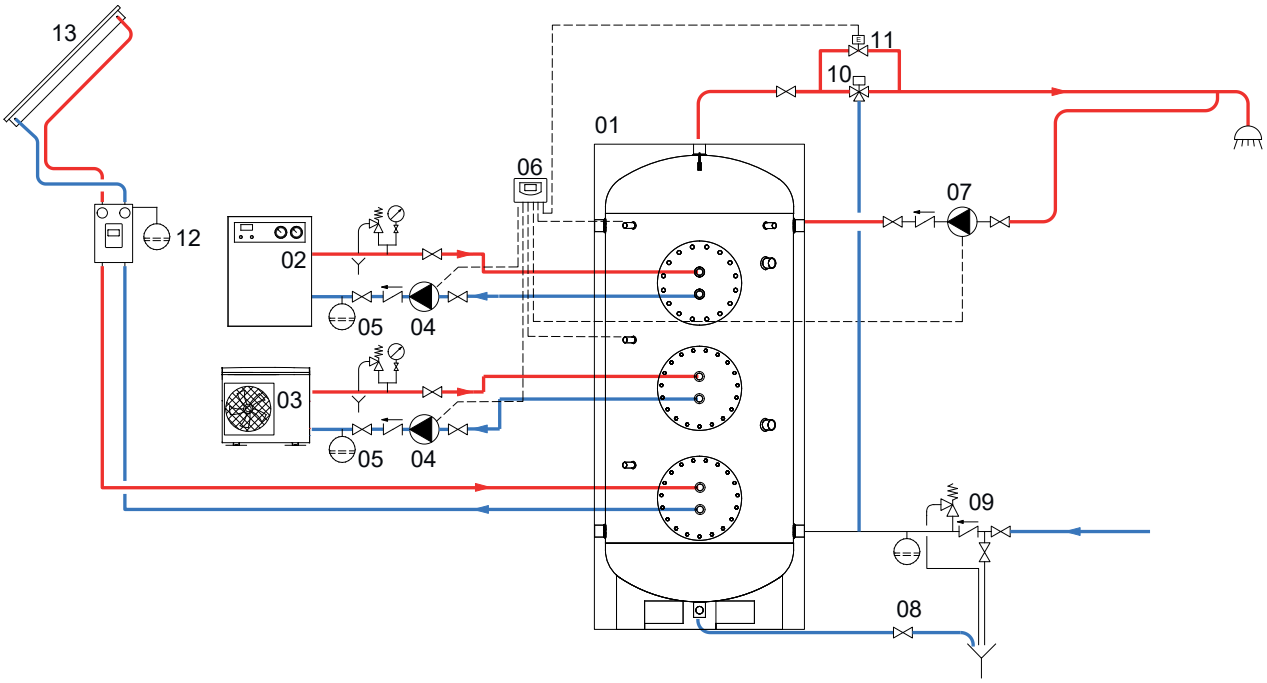

1	Extra 3 Plus	5	Expansion vessel	9	Hydraulic safety group	13	Solar panels
2	generator	6	Easy Control electronic display/ thermostat	10	Thermostatic mixing valve		
3	Heat pump generator	7	DHW recirculation group	11	By-pass solenoid valve		
4	Circulation group	8	Blowdown valve	12	Solar system circulation group		

VASO **INERZIALE**

POLYWARM® COATED DOMESTIC HOT WATER ACCUMULATION TANK



APPLICATION
Domestic hot water storage.
MATERIAL
Mild steel Polywarm® coated (Attestation ACS - SSICA - DVGW - W270 - WRAS)
INSULATION
- HARD: High thermal insulation with ecological polyurethane hard foam.
- SOFT: NOFIRE® polyester fleece 100% made of recyclable material, with high thermal insulation. Fire resistance class B-s2d0 according to EN 13501.

Grey PVC external lining.
CATHODE PROTECTION
Magnesium anode. Models > 1500 n° 2 magnesium anodes.

DRAIN
External confluence through drain connection. Models > 1000 external confluence through drain pipe.
WARRANTY
5 years - See general sales conditions and warranty
ACCESSORIES AND SPARE PARTS
See Accessories section for the entire list.

POLYWARM® COATED DHW STORAGE

STOCK AVAILABILITY

VASO INERZIALE WB

Model	HARD FOAM insulation Art. Nr.	ENERGY EFFICIENCY CLASS
200	3060162310110	B
300	3060162310111	C
500	3060162310112	C
800	3060162310113	B
1000	3060162310114	C
1500	3060162310115	C
2000	3060162310116	B



cordivari.com/erp



On line ErP label tool

VASO INERZIALE WC

Model	DISMOUNTABLE SOFT FLEECE insulation Art. Nr.	ENERGY EFFICIENCY CLASS
500	3060161620166	C
800	3060161620167	C
1000	3060161620168	C
1500	3060161620169	C
2000	3060161620170	C
2500	3060161620171	
3000	3060161620172	
4000	3060161620173	
5000	3060161620174	

ACCESSORIES

ELECTRIC IMMERSION HEATERS



Mod.	Heated volume by electric immersion heater [lt]	MONOPHASE 1,5 kW	2 kW	3 kW	THREEPHASE 4 kW	5 kW	6 kW	9 kW	12 kW
		5240000000051	5240000000052	5240000000053	5240000000047	5240000000048	5240000000049	5240000000050	5240000000031
		Ignition time from 10 °C to 45 °C with electric immersion heaters [min]			Ignition time from 10 °C to 45 °C with electric immersion heaters [min]				
200	49	87	65	44	//	//	//	//	//
300	76	136	102	68	//	//	//	//	//
500	127	228	171	114	//	//	//	//	//
800	178	318	239	159	//	//	//	//	//
1000	243	436	327	218	163	131	109	73	54
1500	288	516	387	258	194	155	129	86	65
2000	443	793	595	396	297	238	198	132	99
2500	577	1033	775	517	387	310	258	172	129
3000	577	1033	775	517	387	310	258	172	129
4000	797	1428	1071	714	535	428	357	238	178
5000	1040	1864	1398	932	699	559	466	311	233

"Easy Control" Electronic Display-mounted on tank

ART. NR.	FOR MODELS
5005000310002	WC
5005000310003	WB



Thermometer

Art. Nr.
5032240000107
5 units box



Titanium electronic anode

Art. Nr.	Model
5200000000008	200, 300
5200000000009	500, 800
5200000000011	1000, 1500
5200000000013	2000÷5000



P.E.D. product designed and produced in conformity to the article 4.3 of directive 2014/68/UE - ErP Ecodesgin directive 2009/125/CE

VASO **INERZIALE**

POLYWARM® COATED DOMESTIC HOT WATER ACCUMULATION TANK

STORAGE		
Model	Pmax	Tmax
200 ÷ 1000	8 bar	90 °C
1500 ÷ 5000	6 bar	

CORDIVARI Lab

TÜV Rheinland Energie und Umwelt GmbH states that test procedures and Cordivari LAB are certified conforming to European standard EN 15332, as indicated by Ecodesign ErP Directive.

TESTED ErP

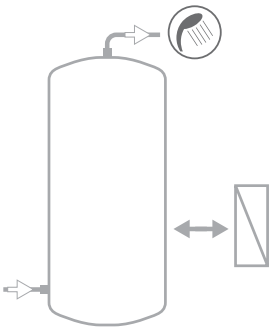

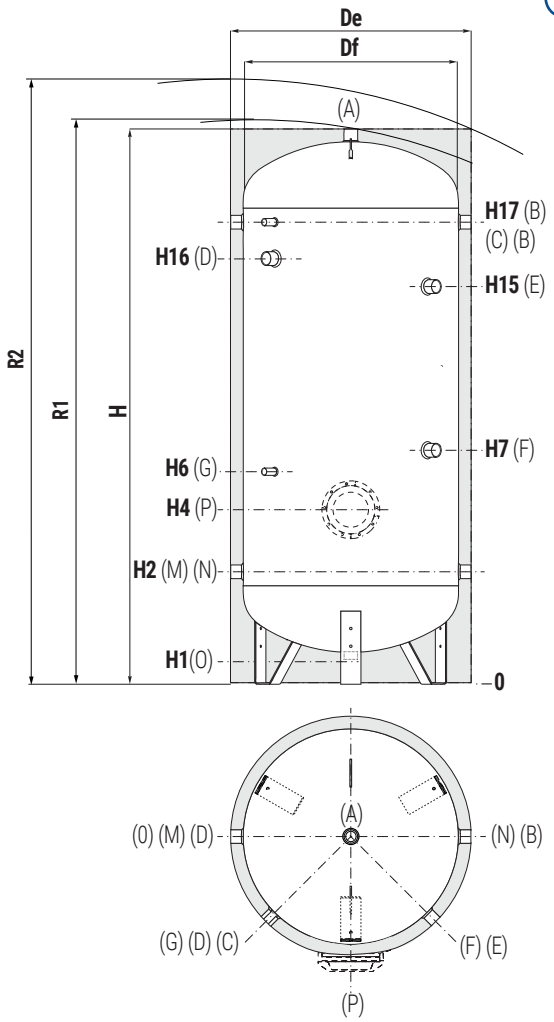

COMPLETE YOUR SYSTEM WITH THE NEW PRS MODULE *(FOR IMMEDIATE DHW PREPARATION)*



SEE HYDRONIC SECTION

A	Domestic hot water outlet
B	Recirculation / Domestic hot water outlet
C	Connection for instrumentation 1/2" F
D	Connection for electric immersion heater 1"1/2 F For models > 800 connection 2" F
E	Connection for 2nd magnesium anode 1"1/4 F (only for models > 1500)
F	Connection for magnesium anode 1" 1/4 F
G	Connection for instrumentation 1/2" F
M	Domestic cold water circuit inlet
N	Alternative domestic cold water circuit inlet or connection for more boilers
O	Drain 1" 1/4 F. For model 1000 connection 1"1/2 F
P	Flange (only for models > 1000)

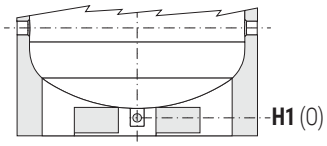

Models from 1500 to 5000 have two gripps on the bottom which allow the use of forklift when handling and drain pipe already fitted.

VASO INERZIALE WB - HARD FOAM INSULATION

Mod.	Vol.	Weight	De	H	R2	H1	H2	H4	H6	H7	H15	H16	H17	P
	[lt]	[kg]	[mm]											
200	192	41	550	1449	1560	85	325	//	520	650	//	1075	1185	//
300	293	52	650	1499	1640	85	350	//	545	735	//	1100	1210	//
500	501	69	750	1800	1960	85	375	//	570	760	//	1329	1485	//
800	792	111	900	2135	2330	85	405	//	600	870	//	1610	1765	//
1000	1041	150	1000	2221	2450	105	458	//	653	993	//	1664	1818	//
1500	1443	186	1100	2415	2660	109	440	525	635	1075	//	1895	2050	Øi170/Øe240
2000	1975	223	1300	2492	2820	91	467	542	652	842	1952	1877	2057	Øi170/Øe240

VASO INERZIALE WC - DISMOUNTABLE SOFT FLEECE INSULATION

Mod.	Vol.	Weight	De	Df	H	R1	R2	H1	H2	H4	H6	H7	H15	H16	H17	P
	[lt]	[kg]	[mm]													
500	500	83	870	650	1891	1998	2090	101	416	//	611	801	//	1370	1526	//
800	792	111	970	750	2188	2220	2400	113	433	//	628	898	//	1638	1793	//
1000	1041	150	1070	850	2242	2270	2490	101	454	//	649	989	//	1660	1814	//
1500	1443	186	1210	950	2440	2495	2730	109	440	525	635	1075	//	1895	2050	Øi170/Øe240
2000	1975	223	1360	1100	2492	2570	2850	91	467	542	652	842	1952	1877	2057	Øi170/Øe240
2500	2311	267	1350	1250	2311	2480	2690	140	551	626	736	976	1816	1732	1891	Øi170/Øe240
3000	2917	313	1350	1250	2811	2950	3130	140	551	626	736	876	2316	2232	2391	Øi170/Øe240
4000	3765	435	1500	1400	2875	3050	3250	114	570	645	755	895	2315	2238	2410	Øi170/Øe240
5000	4979	558	1700	1600	2915	3130	3380	94	580	655	765	935	2335	2265	2420	Øi170/Øe240

P.E.D. product designed and produced in conformity to the article 4.3 of directive 2014/68/UE - ErP Ecodesgin directive 2009/125/CE

VASO **INERZIALE A1 W**

POLYWARM® COATED DOMESTIC HOT WATER ACCUMULATION TANK WITH FIREPROOF INSULATION AND ALUMINIUM EXTERNAL COVER



APPLICATION
Domestic hot water storage.
MATERIAL
Mild steel Polywarm® coated (Attestation ACS - SSICA - DVGW - W270 - WRAS)
INSULATION
Complete fireproof class A1 insulation in compliance with EN 13501, consisting of:
-Glass/rock wool with high thermal insulation
-Aluminium cover hinged and removable
The models 3000-4000-5000 are supplied with non-assembled insulation
CATHODE PROTECTION
Magnesium anode. Models > 1500 n° 2 magnesium anodes.
DRAIN
External confluence through drain connection. Models > 1000 external confluence through drain pipe.
GASKET- FLANGE PLATE
Silicone gaskets suitable for water intended for human consumption (tested according to 98/83/CE), max temperature up to 200°C. Mild steel inspection flange plate with Polywarm®.
WARRANTY
5 years - See general sales conditions and warranty
ACCESSORIES AND SPARE PARTS
See Accessories section for the entire list.

POLYWARM® COATED DHW STORAGE

VASO INERZIALE A1 W

Model	NON-REMOVABLE metallic cover Art. Nr.	ENERGY EFFICIENCY CLASS
300	3060161621403	C
500	3060161621174	C
800	3060161621175	C
1000	3060161621176	C
1500	3060161621177	C
2000	3060161621178	C



cordivari.com/erp



On line ErP label tool

VASO INERZIALE A1 W

Model	REMOVABLE metallic cover Art. Nr.
2500	3060161621409
3000	3060161621411
5000	3060161621414

VASO INERZIALE A1 W

	Model	REMOVABLE metallic cover Art. Nr.
Lowered models	**2500**	3060161621410
	3000	3060161621412
	4000	3060161621413

ACCESSORIES

ELECTRIC IMMERSION HEATERS

Mod.	Heated volume by electric immersion heater [lt]	THREEPHASE **4** kW	**5** kW	**6** kW	**9** kW	**12** kW
		5240000000047	5240000000048	5240000000049	5240000000050	5240000000031
		Tempo di riscaldamento con resistenze elettriche da 10 °C a 60 °C				
300	229	3h 39'	-	-	-	-
500	411	-	5h 15'	4h 22'	-	-
800	640	-	8h 11'	6h 49'	4h 32'	-
1000	718	-	-	7h 36'	5h 06'	3h 49'
1500	1031	-	-	-	-	5h 29'
2000	1345	-	-	-	-	7h 10'
2500	1652	-	-	-	-	8h 48'
3000	2266	-	-	-	-	12h 04'
4000	2810	-	-	-	-	14h 58'
5000	3814	-	-	-	-	20h 19'

P.E.D. product designed and produced in conformity to the article 4.3 of directive 2014/68/UE - ErP Ecodesgin directive 2009/125/CE

VASO **INERZIALE A1 W**

POLYWARM® COATED DOMESTIC HOT WATER ACCUMULATION TANK WITH FIREPROOF INSULATION AND ALUMINUM EXTERNAL COVER

STORAGE	
Pmax	Tmax
7 bar	90 °C

COMPLETE YOUR SYSTEM WITH THE NEW PRS MODULE *(FOR IMMEDIATE DHW PREPARATION)*

SEE HYDRONIC SECTION



CORDIVARI Lab

TÜV Rheinland Energie und Umwelt GmbH states that test procedures and Cordivari LAB are certified conforming to European standard EN 15332, as indicated by Ecodesign ErP Directive.

TESTED ErP

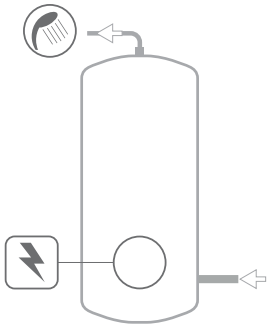

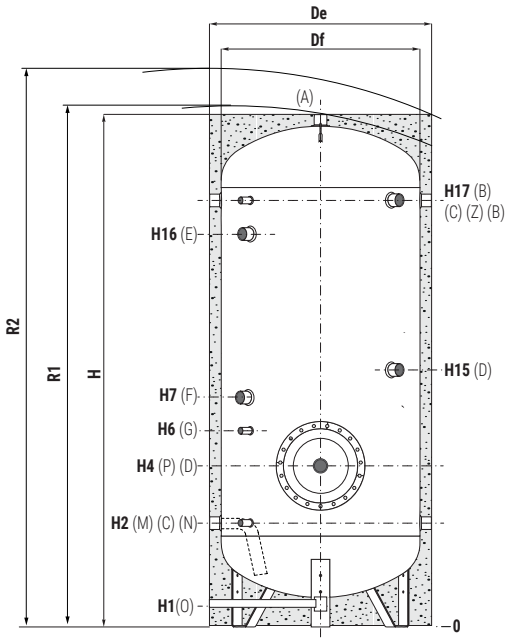

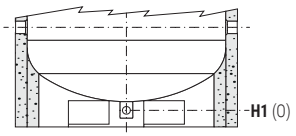

Models from 1500 to 5000 have two gripps on the bottom which allow the use of forklift when handling and drain pipe already fitted.

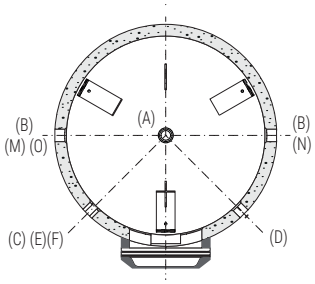

A	Domestic hot water outlet
B	Backflow external heat exchanger / Recir-culation
C-G	Connection for instrumentation 1/2" F
D	Connection for electric immersion heater
E	Connection for 2nd magnesium anode 1" 1/4 F (Modelli >1500)
F	Connection for magnesium anode 1" 1/4 F
M	Domestic cold water circuit inlet
N	Delivery to external heat exchanger
O	Drain
P	Blind flange for inspection
Z	Connection for electric immersion heater 1" 1/2 F

	Model	Volume	Weight	Df	De	H	R1	R2	H1	H2	H4
		[lt]	[kg]	[mm]							
	300	289	52	//	750	1599	//	1770	135	400	485
	500	504	69	//	850	1901	//	2080	126	416	501
	800	793	111	//	950	2188	//	2390	113	433	568
	1000	1022	150	//	1050	2188	//	2430	101	454	739
	1500	1427	186	//	1200	2228	//	2530	107	458	743
	2000	2011	223	//	1450	2111	//	2560	140	551	826
	2500	2308	430	1250	1450	2361	2670	2770	140	551	826
	3000	2913	485	1250	1450	2861	3120	3210	140	551	826
	5000	4975	789	1600	1800	2965	3370	3470	94	580	855
Lowered models	**2500**	2308	430	1400	1600	2175	2590	2700	114	570	845
	3000	2913	485	1500	1700	2190	2660	2770	109	575	850
	4000	4975	789	1600	1800	2465	2940	3050	94	580	855

	Model	H6	H7	H15	H16	H17	P	O	M-N-B	D	A
		[mm]						Conn. F			
	300	595	735	835	//	1260	Øi220/Øe300	1"1/4	1"1/4	1"1/2	1"1/4
	500	611	881	981	//	1536	Øi220/Øe300	1"1/4	1"1/4	1"1/2	1"1/4
	800	718	1018	1118	//	1793	Øi300/Øe380	1"1/4	1"1/4	1"1/2	1"1/4
	1000	939	1139	1239	//	1760	Øi430/Øe512	1"1/2	1"1/2	2"1/2	1"1/2
	1500	943	1143	1243	//	1818	Øi430/Øe512	1"	1"1/2	2"1/2	2"
	2000	1026	1176	1286	1491	1641	Øi430/Øe512	1"	2"	2"1/2	2"
	2500	1026	1221	1321	1666	1891	Øi430/Øe512	1"	2"	2"1/2	2"
	3000	1026	1376	1476	2166	2391	Øi430/Øe512	1"	2"	2"1/2	2"
	5000	1055	1355	1475	2195	2420	Øi430/Øe512	1"	2"	2"1/2	2"
Lowered models	**2500**	1045	1195	1295	1510	1660	Øi430/Øe512	1"	2"	2"1/2	2"
	3000	1050	1200	1300	1515	1665	Øi430/Øe512	1"	2"	2"1/2	2"
	4000	1055	1205	1325	1770	1920	Øi430/Øe512	1"	2"	2"1/2	2"

P.E.D. product designed and produced in conformity to the article 4.3 of directive 2014/68/UE - ErP Ecodesgin directive 2009/125/CE

VASO **STORAGE 1**

POLYWARM® COATED DOMESTIC HOT WATER ACCUMULATION TANK WITH 1 BLIND FLANGE



APPLICATION
Domestic hot water storage.
MATERIAL
Mild steel Polywarm® coated (Attestation ACS - SSICA - DVGW - W270 - WRAS)
INSULATION
- HARD: High thermal insulation with ecological polyurethane hard foam.
- SOFT: NOFIRE® polyester fleece 100% made of recyclable material, with high thermal insulation. Fire resistance class B-s2d0 according to EN 13501.

Grey PVC external lining.
CATHODE PROTECTION
Magnesium anode. Models > 1500 n° 2 magnesium anodes.

DRAIN
External confluence through drain connection. Models > 1000 external confluence through drain pipe.
GASKET- FLANGE PLATE
1 mounting flange
Silicone gaskets suitable for water intended for human consumption (tested according to 98/83/CE), max temperature up to 200°C. Mild steel inspection flange plate with Polywarm®.
WARRANTY
5 years - See general sales conditions and warranty
ACCESSORIES AND SPARE PARTS
See Accessories section for the entire list.

NEW

POLYWARM® COATED DHW STORAGE

VASO STORAGE 1 WB

Model	HARD FOAM insulation Art. Nr.	ENERGY EFFICIENCY CLASS
200	3072162360540	**B**
300	3072162360541	**C**
500	3072162360542	**C**
800	3072162360543	**B**
1000	3072162360544	**C**
1500	3072162360545	**C**
2000	3072162360546	**B**



cordivari.com/erp



On line ErP label tool

VASO STORAGE 1 WC

Model	DISMOUNTABLE SOFT FLEECE insulation Art. Nr.	ENERGY EFFICIENCY CLASS
500	3072162360547	**C**
800	3072162360548	**C**
1000	3072162360549	**C**
1500	3072162360550	**C**
2000	3072162360551	**C**
2500	3072162360552	
3000	3072162360553	
4000	3072162360554	
5000	3072162360555	

ACCESSORIES

ELECTRIC IMMERSION HEATERS

Mod.	Heated volume by electric immersion heater [lt]	MONOPHASE 1,5 kW	MONOPHASE 2 kW	MONOPHASE 3 kW	THREEPHASE 4 kW	THREEPHASE 5 kW	THREEPHASE 6 kW	THREEPHASE 9 kW	THREEPHASE 12 kW
		5240000000051	5240000000052	5240000000053	5240000000047	5240000000048	5240000000049	5240000000050	5240000000031
		Ignition time from 10 °C to 45 °C with electric immersion heaters [min]			Ignition time from 10 °C to 45 °C with electric immersion heaters [min]				
200	49	87	65	44	//	//	//	//	//
300	76	136	102	68	//	//	//	//	//
500	127	228	171	114	//	//	//	//	//
800	178	318	239	159	//	//	//	//	//
1000	243	436	327	218	163	131	109	73	54
1500	288	516	387	258	194	155	129	86	65
2000	443	793	595	396	297	238	198	132	99
2500	577	1033	775	517	387	310	258	172	129
3000	577	1033	775	517	387	310	258	172	129
4000	797	1428	1071	714	535	428	357	238	178
5000	1040	1864	1398	932	699	559	466	311	233

"Easy Control" Electronic Display-mounted on tank

ART. NR.	FOR MODELS
5005000310002	WXC
5005000310003	WXB



Thermometer

Art. Nr.
5032240000107
5 units box



Titanium electronic anode

Art. Nr.	Model
5200000000008	200, 300
5200000000009	500, 800
5200000000011	1000, 1500
5200000000013	2000÷5000



P.E.D. product designed and produced in conformity to the article 4.3 of directive 2014/68/UE - ErP Ecodesgin directive 2009/125/CE

VASO **STORAGE 1**

POLYWARM® COATED DOMESTIC HOT WATER ACCUMULATION TANK WITH 1 BLIND FLANGE

	STORAGE	
Model	Pmax	Tmax
200 ÷ 1000	8 bar	90 °C
1500 ÷ 5000	6 bar	

CORDIVARI Lab

TÜV Rheinland Energie und Umwelt GmbH states that test procedures and Cordivari LAB are certified conforming to European standard EN 15332, as indicated by Ecodesign ErP Directive.

TESTED ErP

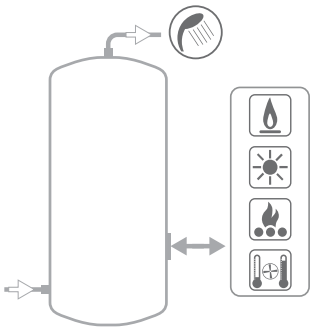

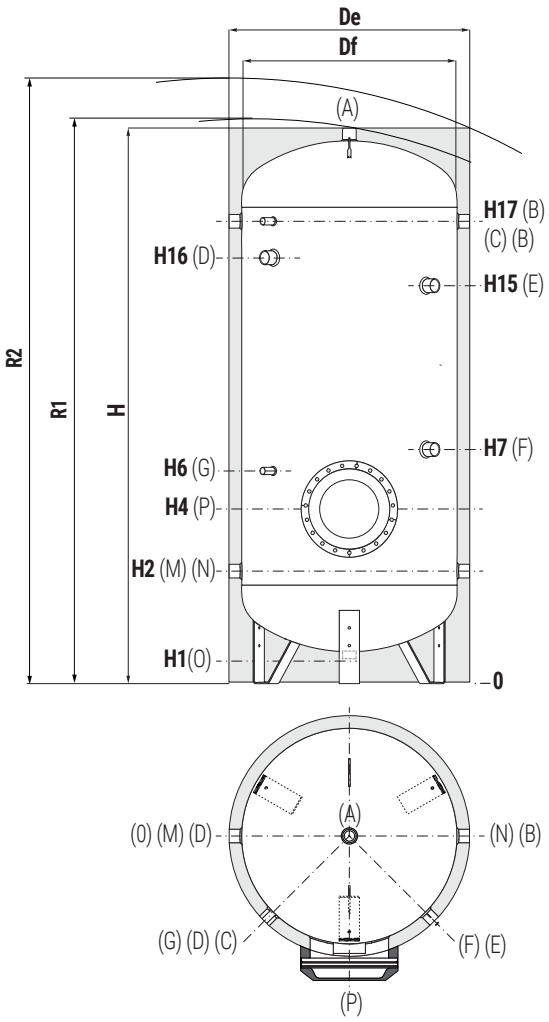

COMPLETE YOUR SYSTEM WITH THE NEW PRS MODULE *(FOR IMMEDIATE DHW PREPARATION)*



SEE HYDRONIC SECTION

A	Domestic hot water outlet
B	Recirculation / Domestic hot water outlet
C	Connection for instrumentation 1/2" F
D	Connection for electric immersion heater 1"1/2 F For models > 800 connection 2" F
E	Connection for 2nd magnesium anode 1"1/4 F (only for models > 1500)
F	Connection for magnesium anode 1" 1/4 F
G	Connection for instrumentation 1/2" F
M	Domestic cold water circuit inlet
N	Alternative domestic cold water circuit inlet or connection for more boilers
O	Drain 1" 1/4 F. For model 1000 connection 1"1/2 F Drain 1" F (only for models > 1000)
P	Flange

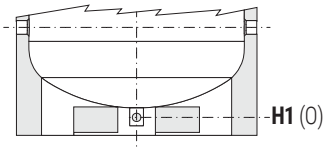

Models from 1500 to 5000 have two gripps on the bottom which allow the use of forklift when handling and drain pipe already fitted.

VASO STORAGE 1 WB - HARD FOAM INSULATION

Model	Volume	Weight	De	H	R1	H1	H2	H4	H6	H7	H15	H16	H17	P	B-M-N	A
	[lt]	[kg]	[mm]												Conn.	F
200	191	51	550	1449	1560	85	325	410	520	650	//	1075	1185	Øi220/Øe300	1" 1/4	1" 1/4
300	292	64	650	1499	1640	85	350	435	545	735	//	1100	1210	Øi220/Øe300	1" 1/4	1" 1/4
500	500	89	750	1800	1960	85	375	460	570	760	//	1329	1485	Øi220/Øe300	1" 1/4	1" 1/4
800	794	149	900	2135	2330	85	405	540	690	870	//	1610	1765	Øi300/Øe380	1" 1/4	1" 1/2
1000	1042	170	1000	2221	2450	105	458	593	743	993	//	1664	1818	Øi300/Øe380	1" 1/2	2"
1500	1445	231	1100	2415	2660	109	440	675	825	1075	//	1895	2050	Øi300/Øe380	1" 1/2	2"
2000	1978	367	1300	2492	2820	91	467	692	867	842	1952	1877	2057	Øi350/Øe430	2"	2"

VASO STORAGE 1 WC - DISMOUNTABLE SOFT FLEECE INSULATION

Model	Volume	Weight	De	DF	H	R1	R2	H1	H2	H4	H6	H7	H15	H16	H17	P	B-M-N	A
	[lt]	[kg]	[mm]														Conn.	F
500	500	94	870	650	1891	1998	2090	101	416	501	611	801	//	1370	1526	Øi220/Øe300	1" 1/4	1" 1/2
800	792	147	970	750	2188	2220	2400	113	433	568	718	898	//	1638	1793	Øi300/Øe380	1" 1/4	1" 1/2
1000	1041	167	1070	850	2242	2270	2490	101	454	589	739	989	//	1660	1814	Øi300/Øe380	1" 1/2	2"
1500	1443	228	1210	950	2440	2495	2730	109	440	675	825	1075	//	1895	2050	Øi300/Øe380	1" 1/2	2"
2000	1975	352	1360	1100	2492	2570	2850	91	467	692	867	842	1952	1877	2057	Øi350/Øe430	2"	2"
2500	2311	366	1350	1250	2311	2480	2690	140	551	776	951	976	1816	1732	1891	Øi350/Øe430	2"	2"
3000	2917	432	1350	1250	2811	2950	3130	140	551	836	1011	1036	2316	2232	2391	Øi350/Øe430	2"	2"
4000	3765	555	1500	1400	2875	3050	3250	114	570	855	1030	1035	2315	2238	2410	Øi350/Øe430	2"	2"
5000	4979	732	1700	1600	2915	3130	3380	94	580	855	1030	1035	2335	2265	2420	Øi350/Øe430	2"	2"

P.E.D. product designed and produced in conformity to the article 4.3 of directive 2014/68/UE - ErP Ecodesgin directive 2009/125/CE

VASO **STORAGE 2**

POLYWARM® COATED DOMESTIC HOT WATER ACCUMULATION TANK WITH 2 BLIND FLANGES



APPLICATION
Domestic hot water storage.
MATERIAL
Mild steel Polywarm® coated (Attestation ACS - SSICA - DVGW - W270 - WRAS)
INSULATION
- HARD: High thermal insulation with ecological polyurethane hard foam.
- SOFT: NOFIRE® polyester fleece 100% made of recyclable material, with high thermal insulation. Fire resistance class B-s2d0 according to EN 13501.

Grey PVC external lining.
CATHODE PROTECTION
Magnesium anode. Models > 1500 n° 2 magnesium anodes.

DRAIN
External confluence through drain connection. Models > 1000 external confluence through drain pipe.
GASKET- FLANGE PLATE
2 mounting flanges
Silicone gaskets suitable for water intended for human consumption (tested according to 98/83/CE), max temperature up to 200°C. Mild steel inspection flange plate with Polywarm®.
WARRANTY
5 years - See general sales conditions and warranty
ACCESSORIES AND SPARE PARTS
See Accessories section for the entire list.

NEW

POLYWARM® COATED DHW STORAGE

VASO STORAGE 2 WB

Model	HARD FOAM insulation Art. Nr.	ENERGY EFFICIENCY CLASS
200	3084162360010	**B**
300	3084162360011	**C**
500	3084162360012	**C**
800	3084162360013	**B**
1000	3084162360014	**C**
1500	3084162360015	**C**
2000	3084162360016	**B**



cordivari.com/erp



On line ErP label tool

VASO STORAGE 2 WC

Model	DISMOUNTABLE SOFT FLEECE insulation Art. Nr.	ENERGY EFFICIENCY CLASS
500	3082162360140	**C**
800	3082162360141	**C**
1000	3082162360142	**C**
1500	3082162360143	**C**
2000	3082162360144	**C**
2500	3082162360145	
3000	3082162360146	
4000	3082162360147	
5000	3082162360148	

ACCESSORIES

ELECTRIC IMMERSION HEATERS

Mod.	Heated volume by electric immersion heater [lt]	MONOPHASE 1,5 kW	MONOPHASE 2 kW	MONOPHASE 3 kW	THREEPHASE 4 kW	THREEPHASE 5 kW	THREEPHASE 6 kW	THREEPHASE 9 kW	THREEPHASE 12 kW
		5240000000051	5240000000052	5240000000053	5240000000047	5240000000048	5240000000049	5240000000050	5240000000031
		Ignition time from 10 °C to 45 °C with electric immersion heaters [min]			Ignition time from 10 °C to 45 °C with electric immersion heaters [min]				
200	49	87	65	44	//	//	//	//	//
300	76	136	102	68	//	//	//	//	//
500	127	228	171	114	//	//	//	//	//
800	178	318	239	159	//	//	//	//	//
1000	243	436	327	218	163	131	109	73	54
1500	288	516	387	258	194	155	129	86	65
2000	443	793	595	396	297	238	198	132	99
2500	577	1033	775	517	387	310	258	172	129
3000	577	1033	775	517	387	310	258	172	129
4000	797	1428	1071	714	535	428	357	238	178
5000	1040	1864	1398	932	699	559	466	311	233

"Easy Control" Electronic Display-mounted on tank

ART. NR.	FOR MODELS
5005000310002	WC
5005000310003	WB



Thermometer

Art. Nr.
5032240000107
5 units box



Titanium electronic anode

Art. Nr.	Model
5200000000008	200, 300
5200000000009	500, 800
5200000000011	1000, 1500
5200000000013	2000÷5000



P.E.D. product designed and produced in conformity to the article 4.3 of directive 2014/68/UE - ErP Ecodesgin directive 2009/125/CE

VASO **STORAGE 2**

POLYWARM® COATED DOMESTIC HOT WATER ACCUMULATION TANK WITH 2 BLIND FLANGES

STORAGE		
Model	Pmax	Tmax
200 ÷ 1000	8 bar	90 °C
1500 ÷ 5000	6 bar	

CORDIVARI Lab

TÜV Rheinland Energie und Umwelt GmbH states that test procedures and Cordivari LAB are certified conforming to European standard EN 15332, as indicated by Ecodesign ErP Directive.

TESTED ErP

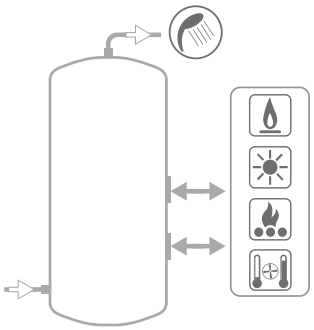

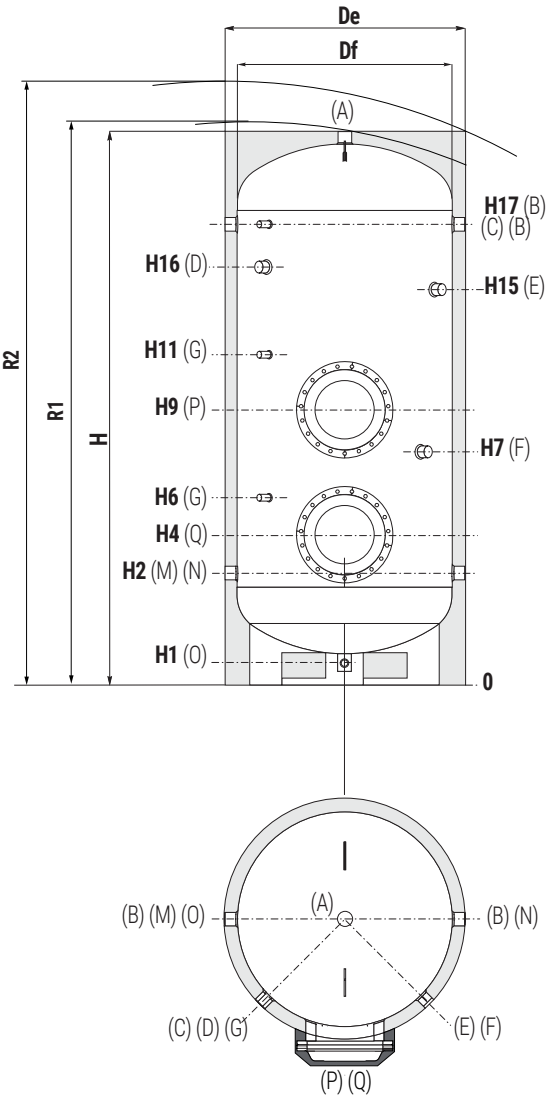

COMPLETE YOUR SYSTEM WITH THE NEW PRS MODULE *(FOR IMMEDIATE DHW PREPARATION)*



SEE HYDRONIC SECTION

A	Domestic hot water outlet
B	Recirculation / Domestic hot water outlet
C	Connection for instrumentation 1/2" F
D	Connection for electric immersion heater 1"1/2 F For models > 800 connection 2" F
E	Connection for 2nd magnesium anode 1"1/4 F (only for models > 1500)
F	Connection for magnesium anode 1" 1/4 F
G	Connection for instrumentation 1/2" F
M	Domestic cold water circuit inlet
N	Alternative domestic cold water circuit inlet or connection for more boilers
O	"Drain 1" 1/4 F. For model 1000 connection 1"1/2 F. for models > 1000 1"" F "
P-Q	Flange

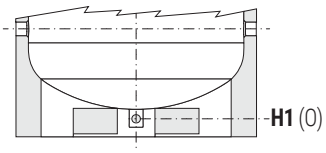

Models from 1500 to 5000 have two gripps on the bottom which allow the use of forklift when handling and drain pipe already fitted.

VASO STORAGE 2 WB - HARD FOAM INSULATION

Model	Volume	Weight	De	H	R2	H1	H2	H4	H6	H7	H9	H11	H15	H16	H17	P-Q	B-M-N	A
	[lt]	[kg]	[mm]														Connections F	
200	193	54	550	1449	1560	85	325	410	520	650	860	970	//	1075	1185	Øi220/Øe300	1"1/4	1"1/4
300	295	68	650	1499	1640	85	350	435	545	735	885	995	//	1100	1210	Øi220/Øe300	1"1/4	1"1/4
500	503	95	750	1800	1960	85	375	460	570	760	910	1020	//	1329	1485	Øi220/Øe300	1"1/4	1"1/4
800	799	154	900	2135	2330	85	405	540	690	870	1090	1240	//	1610	1765	Øi300/Øe380	1"1/4	1"1/4
1000	1047	176	1000	2221	2450	105	458	593	743	993	1143	1293	//	1664	1818	Øi300/Øe380	1"1/2	1"1/2
1500	1450	236	1100	2415	2660	109	440	675	825	1075	1250	1400	//	1895	2050	Øi300/Øe380	1"1/2	2"
2000	1985	374	1300	2492	2820	91	467	692	867	842	1262	1437	1952	1877	2057	Øi350/Øe430	2"	2"

VASO STORAGE 2 WC - DISMOUNTABLE SOFT FLEECE INSULATION

Model	Volume	Weight	De	DF	H	R1	R2	H1	H2	H4	H6	H7	H9	H11	H15	H16	H17	P-Q	B-M-N	A
	[lt]	[kg]	[mm]																Conn. F	
500	500,0	100	870	650	1891	1998	2090	101	416	501	611	801	951	1061	//	1370	1526	Øi220/Øe300	1" 1/4	1" 1/4
800	798,0	153	970	750	2188	2220	2400	113	433	568	718	898	1118	1268	//	1638	1793	Øi300/Øe380	1" 1/4	1" 1/4
1000	1047,0	173	1070	850	2242	2270	2490	101	454	589	739	989	1139	1289	//	1660	1814	Øi300/Øe380	1" 1/2	1" 1/2
1500	1450,0	234	1210	950	2440	2495	2730	109	440	675	825	1075	1250	1400	//	1895	2050	Øi300/Øe380	1" 1/2	2"
2000	1985,0	359	1360	1100	2492	2570	2850	91	467	692	867	842	1262	1437	1952	1877	2057	Øi350/Øe430	2"	2"
2500	2322,0	373	1350	1250	2311	2480	2690	140	551	776	951	976	1376	1551	1816	1732	1891	Øi350/Øe430	2"	2"
3000	2928,0	439	1350	1250	2811	2950	3130	140	551	836	1011	1036	1476	1651	2316	2232	2391	Øi350/Øe430	2"	2"
4000	3776,0	561	1500	1400	2875	3050	3250	114	570	855	1030	1035	1495	1670	2315	2238	2410	Øi350/Øe430	2"	2"
5000	4990,0	739	1700	1600	2915	3130	3380	94	580	855	1030	1035	1505	1680	2335	2265	2420	Øi350/Øe430	2"	2"

P.E.D. product designed and produced in conformity to the article 4.3 of directive 2014/68/UE - ErP Ecodesgin directive 2009/125/CE

VASO **STORAGE 3**

POLYWARM® COATED DOMESTIC HOT WATER ACCUMULATION TANK WITH 3 BLIND FLANGES



APPLICATION
Domestic hot water storage.
MATERIAL
Mild steel Polywarm® coated (Attestation ACS - SSICA - DVGW - W270 - WRAS)
INSULATION
NOFIRE® polyester fleece 100% made of recyclable material, with high thermal insulation. Fire resistance class B-s2d0 according to EN 13501. Grey PVC external lining.
CATHODE PROTECTION
Magnesium anode. Models > 1500 n° 2 magnesium anodes.

DRAIN
External confluence through drain connection. Models > 1000 external confluence through drain pipe.
GASKET- FLANGE PLATE
3 mounting flanges
Silicone gaskets suitable for water intended for human consumption (tested according to 98/83/CE), max temperature up to 200°C. Mild steel inspection flange plate with Polywarm®.
WARRANTY
5 years - See general sales conditions and warranty
ACCESSORIES AND SPARE PARTS
See Accessories section for the entire list.

NEW

POLYWARM® COATED DHW STORAGE



cordivari.com/erp



On line ErP label tool

VASO STORAGE 3 WC

Model	DISMOUNTABLE SOFT FLEECE insulation Art. Nr.	ENERGY EFFICIENCY CLASS
500	3092162360140	C
1000	3092162360141	C
1500	3092162360142	C
2000	3092162360143	C
3000	3092162360144	
5000	3092162360145	

ACCESSORIES

"Easy Control" Electronic Display-mounted on tank

ART. NR.	FOR MODELS
5005000310002	WRC
5005000310003	WRB



Thermometer

Art. Nr.
5032240000107
5 units box



Titanium electronic anode

Art. Nr.	Model
5200000000009	500, 800
5200000000011	1000, 1500
5200000000013	2000÷5000



P.E.D. product designed and produced in conformity to the article 4.3 of directive 2014/68/UE - ErP Ecodesgin directive 2009/125/CE

VASO **STORAGE 3**

POLYWARM® COATED DOMESTIC HOT WATER ACCUMULATION TANK WITH 3 BLIND FLANGES

	STORAGE	
Model	Pmax	Tmax
500 ÷ 1000	8 bar	90 °C
1500 ÷ 5000	6 bar	

CORDIVARI Lab

TÜV Rheinland Energie und Umwelt GmbH states that test procedures and Cordivari LAB are certified conforming to European standard EN 15332, as indicated by Ecodesign ErP Directive.

TESTED ErP

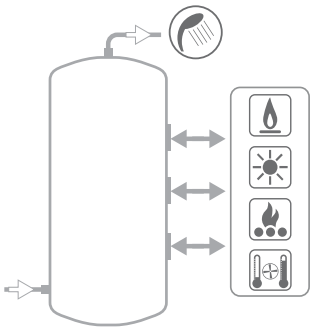

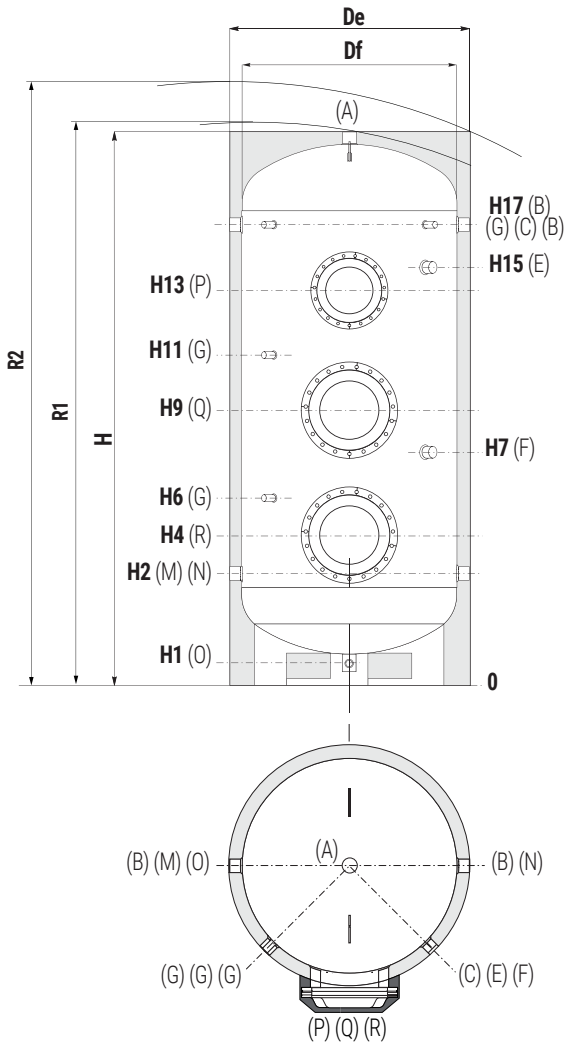

COMPLETE YOUR SYSTEM WITH THE NEW PRS MODULE *(FOR IMMEDIATE DHW PREPARATION)*



SEE HYDRONIC SECTION

A	Domestic hot water outlet 2" F
B	Recirculation / Domestic hot water outlet 1" 1/2 F. For models > 1500 2" F
C	Connection for instrumentation 1/2" F
E	Connection for 2nd magnesium anode 1"1/4 F (only for models > 1500)
F	Connection for magnesium anode 1" 1/4 F
G	Connection for instrumentation 1/2" F
M	Domestic cold water circuit inlet 1" 1/2 F. For models > 1500 2" F
N	Alternative domestic cold water circuit inlet or connection for more boilers 1" 1/2 F. For models > 1500 2" F
O	Drain 1" F
P-Q-R	Flange

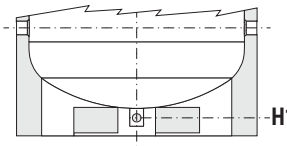

Models from 1500 to 5000 have two gripps on the bottom which allow the use of forklift when handling and drain pipe already fitted.

Model	Volume	Weight	De	Df	H	R1	R2	H1	H2	H4	H6	H7
	[lt]	[kg]	[mm]									
500	500	500	870	650	1891	1990	2090	126	416	501	611	801
1000	1360	1360	1070	850	2198	2240	3140	89	454	562	649	989
1500	1455	1455	1210	950	2440	2495	2730	109	440	675	825	1075
2000	1991	1991	1360	1100	2492	2570	2850	91	467	692	867	842
3000	2933	2933	1350	1250	2811	2950	3130	140	551	836	1011	1036
5000	4996	4996	1700	1600	2915	3130	3380	94	580	855	1030	1035

Model	H9	H11	H13	H15	H17	Q-R	P
	[mm]						
500	951	1061	1401	//	1526	Øi220/Øe300	Øi220/Øe300
1000	1112	1249	1612	//	1760	Øi300/Øe380	Øi300/Øe380
1500	1250	1400	1875	//	2050	Øi300/Øe380	Øi300/Øe380
2000	1262	1437	1817	1592	2057	Øi350/Øe430	Øi300/Øe380
3000	1476	1651	2176	1926	2391	Øi350/Øe430	Øi300/Øe380
5000	1505	1680	2115	1855	2420	Øi350/Øe430	Øi350/Øe430

P.E.D. product designed and produced in conformity to the article 4.3 of directive 2014/68/UE - ErP Ecodesgin directive 2009/125/CE

CORDIVARI

VASO **STORAGE COMPACT**

POLYWARM® COATED DOMESTIC HOT WATER ACCUMULATION TANK SUITABLE FOR LOW-CEILINGED ROOM



APPLICATION
Domestic hot water storage. Suitable for low-ceilinged room.
MATERIAL
Mild steel Polywarm® coated (Attestation ACS - SSICA - DVGW - W270 - WRAS)
INSULATION (DISMOUNTABLE)
NOFIRE® polyester fleece 100% made of recyclable material, with high thermal insulation. Fire resistance class B-s2d0 according to EN 13501.
Grey PVC external lining.

CATHODE PROTECTION
N° 2 magnesium anodes.
DRAIN
External confluence through drain connection.
WARRANTY
5 years - See general sales conditions and warranty
ACCESSORIES AND SPARE PARTS
See Accessories section for the entire list.

NEW

POLYWARM® COATED DHW STORAGE



cordivari.com/erp



On line ErP label tool

VASO STORAGE COMPACT WC

Model	DISMOUNTABLE SOFT FLEECE insulation Art. Nr.	ENERGY EFFICIENCY CLASS ErP
1500	3072162360556	C
2000	3072162360557	C
2500	3072162360558	
3000	3072162360559	
4000	3072162360560	

ACCESSORIES

ELECTRIC IMMERSION HEATERS

Mod.	Heated volume by electric immersion heater [lt]	MONOPHASE 1,5 kW	MONOPHASE 2 kW	MONOPHASE 3 kW	THREEPHASE 4 kW	THREEPHASE 5 kW	THREEPHASE 6 kW	THREEPHASE 9 kW	THREEPHASE 12 kW
		5240000000051	5240000000052	5240000000053	5240000000047	5240000000048	5240000000049	5240000000050	5240000000031
		Ignition time from 10 °C to 45 °C with electric immersion heaters [min]			Ignition time from 10 °C to 45 °C with electric immersion heaters [min]				
1500	443	793	595	396	297	238	198	132	99
2000	577	1033	775	517	387	310	258	172	129
2500	797	1428	1071	714	535	428	357	238	178
3000	874	1565	1173	782	587	469	391	261	196
4000	924	1655	1241	828	621	497	414	276	207

"Easy Control" Electronic Display-mounted on tank

ART. NR.	FOR MODELS
5005000310002	WC



Thermometer

Art. Nr.
5032240000107
5 units box



Titanium electronic anode

Art. Nr.	Model
5200000000011	1500
5200000000013	2000÷4000



P.E.D. product designed and produced in conformity to the article 4.3 of directive 2014/68/UE - ErP Ecodesgin directive 2009/125/CE

VASO **STORAGE COMPACT**

POLYWARM® COATED DOMESTIC HOT WATER ACCUMULATION TANK SUITABLE FOR LOW-CEILINGED ROOM

STORAGE	
Pmax	Tmax
6 bar	90 °C

CORDIVARI Lab

TÜV Rheinland Energie und Umwelt GmbH states that test procedures and Cordivari LAB are certified conforming to European standard EN 15332, as indicated by Ecodesign ErP Directive.

TESTED ErP

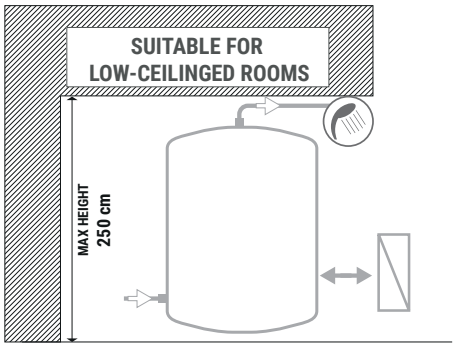

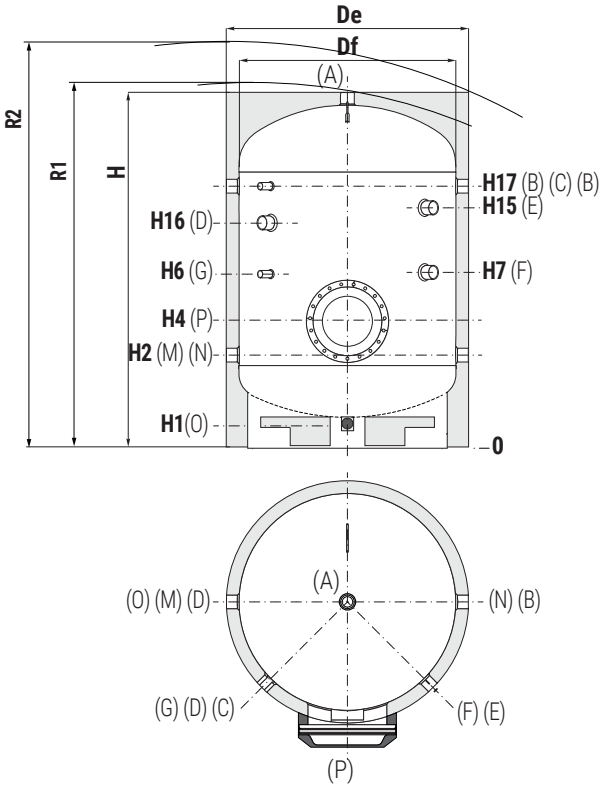

COMPLETE YOUR SYSTEM WITH THE NEW PRS MODULE *(FOR IMMEDIATE DHW PREPARATION)*



SEE HYDRONIC SECTION

A	Domestic hot water outlet
B	Recirculation / Domestic hot water outlet
C	Connection for instrumentation 1/2" F
D	Connection for electric immersion heater 1"1/2 F For models > 800 connection 2" F
E	Connection for 2nd magnesium anode 1"1/4 F (only for models > 1500)
F	Connection for magnesium anode 1" 1/4 F
G	Connection for instrumentation 1/2" F
M	Domestic cold water circuit inlet
N	Alternative domestic cold water circuit inlet or connection for more boilers
O	Drain 1" 1/4 F. For model 1000 connection 1"1/2 F Drain 1" F (only for models > 1000)
P	Flange

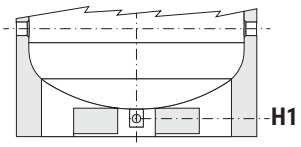

The calorifier has two gripps on the bottom which allows the use of forklift when handling and already equipped with mounted drainage tube.

Model	Volume	Weight	De	Df	H	R1	R2	H1	H2	H4
	[lt]	[kg]	[mm]							
1500	1506	221	1360	1100	1992	2104	2420	91	467	692
2000	2012	300	1510	1250	2111	2251	2610	140	551	776
2500	2627	393	1500	1400	2125	2363	2610	114	570	795
3000	3029	472	1600	1500	2140	2410	2680	109	575	800
4000	3990	565	1700	1600	2415	2678	2960	94	580	835

Model	H6	H7	H15	H16	H17	P	B-M-N	A
	[mm]						Connections F	
1500	867	942	//	1377	1557	Øi300/Øe380	2"	2"
2000	951	976	1566	1482	1641	Øi350/Øe430	2"	2"
2500	970	975	1585	1488	1660	Øi350/Øe430	2"	2"
3000	975	980	1600	1520	1675	Øi350/Øe430	2"	2"
4000	1010	1015	1855	1765	1920	Øi350/Øe430	2"	2"

P.E.D. product designed and produced in conformity to the article 4.3 of directive 2014/68/UE - ErP Ecodesgin directive 2009/125/CE

INTEGRATIVE COMPONENTS FOR VASO STORAGE

COMPATIBILITY TABLES VASI STORAGE/HEAT EXCHANGERS

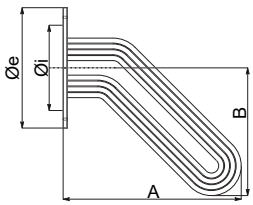

Antilegionella® heat exchanger kit + gaskets + bolts and insulated bushes.

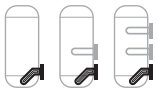

ANTILEGIONELLA® HEAT EXCHANGER

Heat exchanger surface	Øi / Øe flange	A	B	Art. Nr.	Storage 1 - 2		Storage 1-2-3	Storage 1 - 2	Storage 1-2-3		Storage 1 - 2	Storage 1-2-3	Storage 1 - 2	Storage 1-2-3
					Model									
[m²]	[mm]				200	300	500	800	1000	1500	2000	2500	3000	4000	5000
0,5	Øi220/Øe300	350	240	5221000010100	✓	✓	✓								
0,75	Øi220/Øe300	350	240	5221000010101	✓	✓	✓								
1	Øi220/Øe300	371	261	5221000010102			✓								
1,5	Øi220/Øe300	561	311	5221000010113			✓								
1,5	Øi300/Øe380	496	336	5221000010103				✓	✓	✓					
2	Øi300/Øe380	496	336	5221000010104				✓	✓	✓					
3	Øi300/Øe380	607	452	5221000010105					✓	✓					
4	Øi350/Øe430	636	457	5221000010106							✓	✓	✓	✓	✓
5	Øi350/Øe430	678	498	5221000010107							✓	✓	✓	✓	✓
6	Øi350/Øe430	828	585	5221000010123									✓	✓	✓
8	Øi350/Øe430	1250	598	5221000010108										✓	✓
10	Øi350/Øe430	1550	538	5221000010109											✓

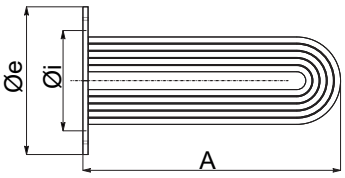

Straight heat exchanger kit + gaskets + bolts and insulated bushes.

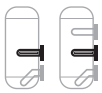

MIDDLE HEAT EXCHANGER



UPPER HEAT EXCHANGER

Heat exchanger surface	Øi / Øe flange	A	Art. Nr.	Storage 2-3											Storage 2-3					
				Model											Model					
[m²]		[mm]		200	300	500	800	1000	1500	2000	2500	3000	4000	5000	500	1000	1500	2000	3000	5000
0,5	Øi220/Øe300	445	5221000010074	✓	✓	✓									✓					
0,75	Øi220/Øe300	445	5221000010075	✓	✓	✓									✓					
1	Øi220/Øe300	475	5221000010076	✓	✓	✓									✓					
1,5	Øi220/Øe300	690	5221000010077			✓									✓					
1,5	Øi300/Øe380	600	5221000010078				✓	✓	✓							✓	✓	✓	✓	
2	Øi300/Øe380	560	5221000010079				✓	✓	✓							✓	✓	✓	✓	
3	Øi300/Øe380	720	5221000010080				✓	✓	✓							✓	✓	✓	✓	
4	Øi350/Øe430	750	5221000010081							✓	✓	✓	✓	✓						✓
5	Øi350/Øe430	780	5221000010082							✓	✓	✓	✓	✓						✓
6	Øi350/Øe430	890	5221000010122							✓	✓	✓	✓	✓						✓
8	Øi350/Øe430	1250	5221000010083								✓	✓	✓	✓						✓
10	Øi350/Øe430	1510	5221000010084											✓						✓

INTEGRATIVE COMPONENTS FOR VASO STORAGE

COMPATIBILITY TABLES VASI STORAGE/HEAT EXCHANGERS

FLANGE PLATE FOR D.H.W. STORAGE TANKS

After choosing the heat exchanger according to the compatibility tables and to the needs of the installation, it is necessary to choose the flange plate of the corresponding diameter.



Art. Nr.	Connection	Diameter [mm]
5206000000001	1"	300
5206000000002	2"	380
5206000000003	2"	430

Includes 2 gaskets, bolts and bushes
Version for pipes heat exchanger

The Flange plate includes 2 sleeve collars for the connection to the operating system. This allows the circulation of the liquid within the heat exchanger's serpentine doing the real separation between the incoming liquid and the outgoing one. The flange plate is in mild steel. Blind flange for accumulation tank in Polywarm® available also with 1 connection. Including: gaskets, bolts and bushes

FLANGE PLATE FOR D.H.W. STORAGE TANKS (VASI STORAGE)



Art. Nr.	Connection	Ø outer [mm]
5206000000051	1"1/2	300
5206000000054	1"1/2	380
5206000000056	1"1/2	430
5206000000053	2"	430

Includes 1 gasket and bolts
1 connection for electric immersion heater (available on storage tanks)



Art. Nr.	Ø outer [mm]
5206000000101	300
5206000000102	380
5206000000103	430

Includes 1 gasket and bolts
Blind flange available (available on storage tanks)

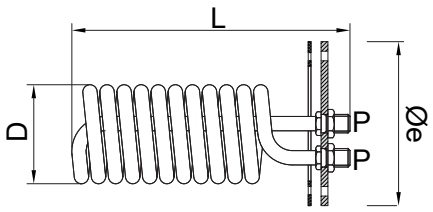

Finned heat exchanger kit + gaskets + bolts and insulated bushes.

MIDDLE AND LOWER HEAT EXCHANGER — **UPPER** HEAT EXCHANGER

Heat exchanger surface	Øi / Øe flange	D	L	P	capacity	Art. Nr.	Storage 1 - 1 COMPACT -2											Storage 3					
							Model											Model					
[m²]	[mm]				[lt]		200	300	500	800	1000	1500	2000	2500	3000	4000	5000	500	1000	1500	2000	3000	5000
0,76	Øi220/Øe300	142	400	1"	0,6	5221000061003	✓	✓	✓									✓					
0,94	Øi220/Øe300	142	410	1"	0,54	5221000061002	✓	✓	✓									✓					
1,58	Øi220/Øe300	170	440	1"	1,21	5221000061004	✓	✓	✓									✓					
0,94	Øi300/Øe380	142	410	1"	0,54	5221000061011				✓	✓	✓							✓	✓	✓	✓	
1,58	Øi300/Øe380	170	440	1"	1,21	5221000061012				✓	✓	✓							✓	✓	✓	✓	
2,63	Øi300/Øe380	190	570	1"	2,07	5221000061006				✓	✓	✓							✓	✓	✓	✓	
3,17	Øi300/Øe380	190	665	1"	2,51	5221000061007				✓	✓	✓							✓	✓	✓	✓	
4,54	Øi300/Øe380	190	750	1"1/4	3,6	5221000061008				✓	✓	✓							✓	✓	✓	✓	
3,17	Øi350/Øe430	190	665	1"	2,51	5221000061013							✓	✓	✓	✓	✓						✓
4,54	Øi350/Øe430	190	750	1"1/4	3,6	5221000061014							✓	✓	✓	✓	✓						✓
5,26	Øi350/Øe430	190	850	1"1/4	4,14	5221000061009							✓	✓	✓	✓	✓						✓
6,34	Øi350/Øe430	190	980	1"1/4	5,1	5221000061010							✓	✓	✓	✓	✓						✓

EXAMPLE OF INSTALLATION WITH **VASO INERZIALE A1**

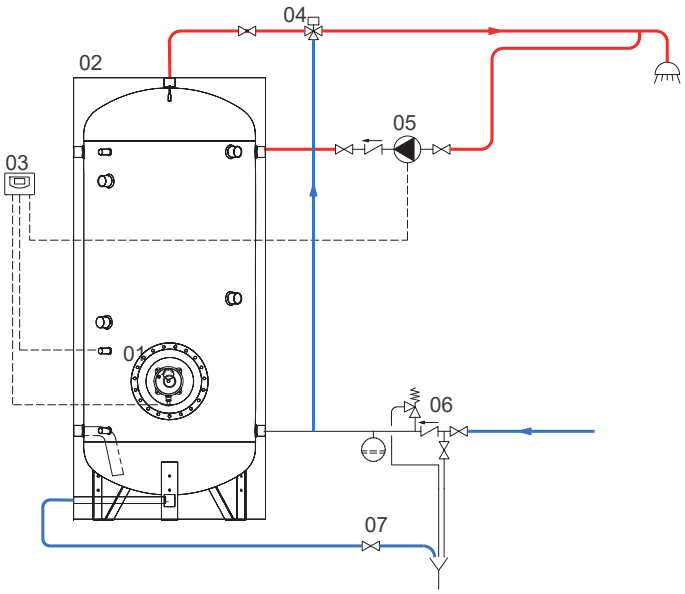

01	Generator	03	Easy Control electronic display/thermostat	05	DHW Circulation group	07	Blowdown valve
02	VASO INERZIALE A1	04	Thermostatic mixing valve	06	Hydraulic safety group		

EXAMPLE OF INSTALLATION WITH **VASO INERZIALE STORAGE 1**

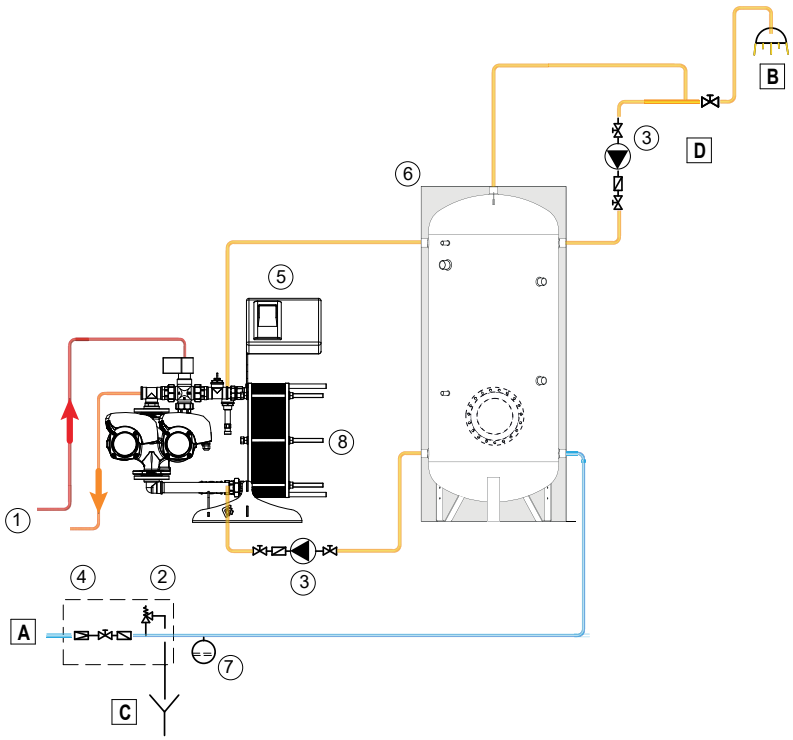

1	Generator	4	Hydraulic safety group	7	Expansion vessel	B	Domestic hot water users
2	Safety Valve	5	Modulo PRS	8	Heat exchanger	C	Drain
3	Circulation group	6	Accumulatore Storage	A	Domestic cold water circuit inlet	D	Recirculation ACS

EXAMPLE OF INSTALLATION WITH **VASO STORAGE COMPACT**

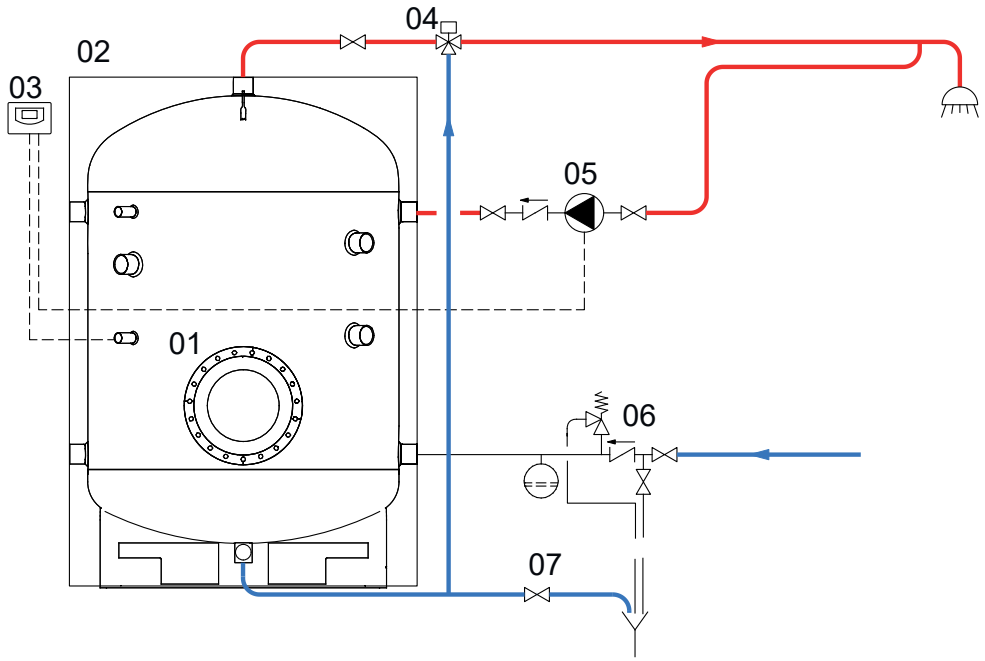

01	Generator	03	Easy Control electronic display/ thermostat	05	DHW recirculation group	07	Blowdown valve
02	Vaso storage compact	04	Thermostatic mixing valve	06	Hydraulic safety group		

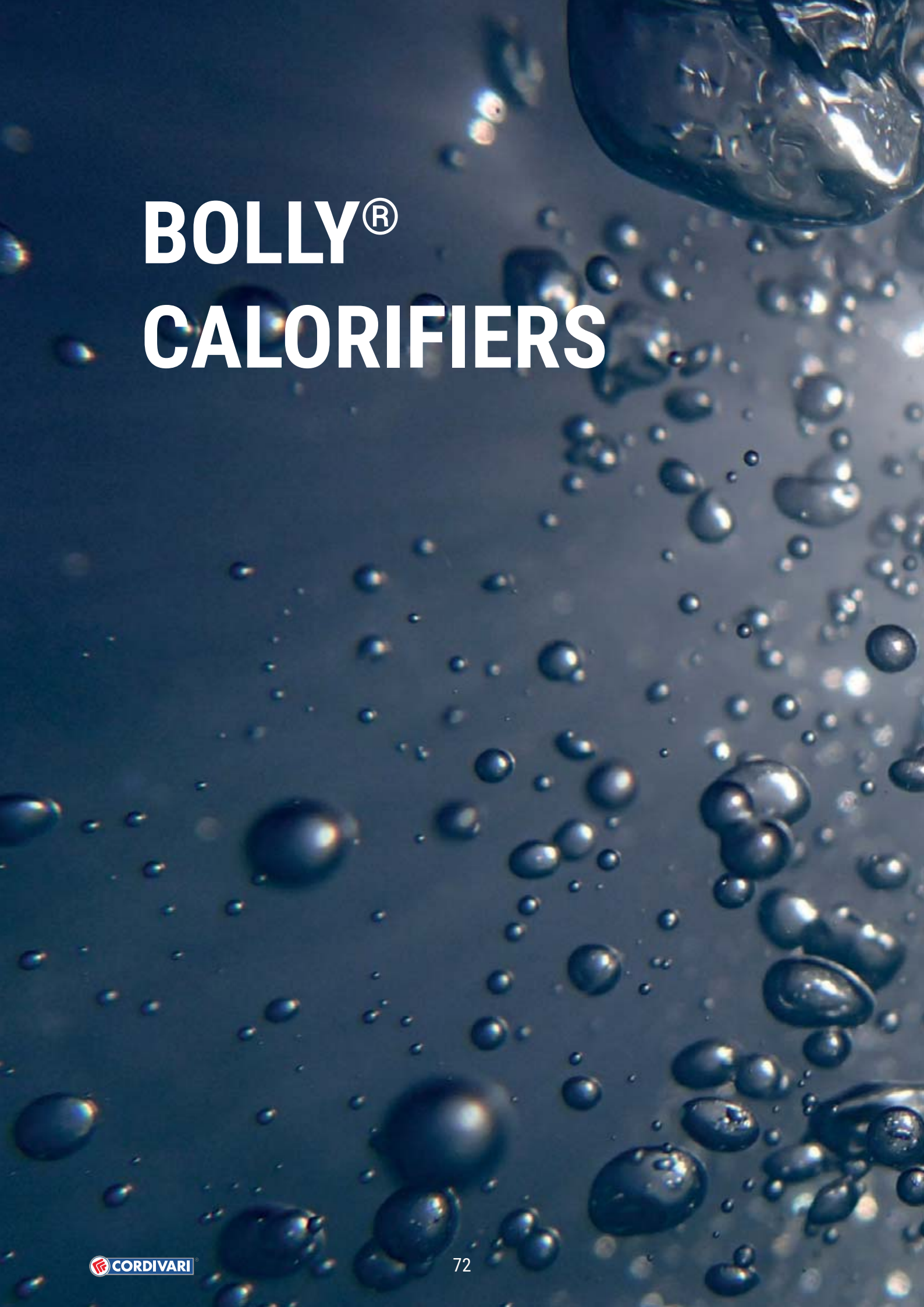

BOLLY®
CALORIFIERS

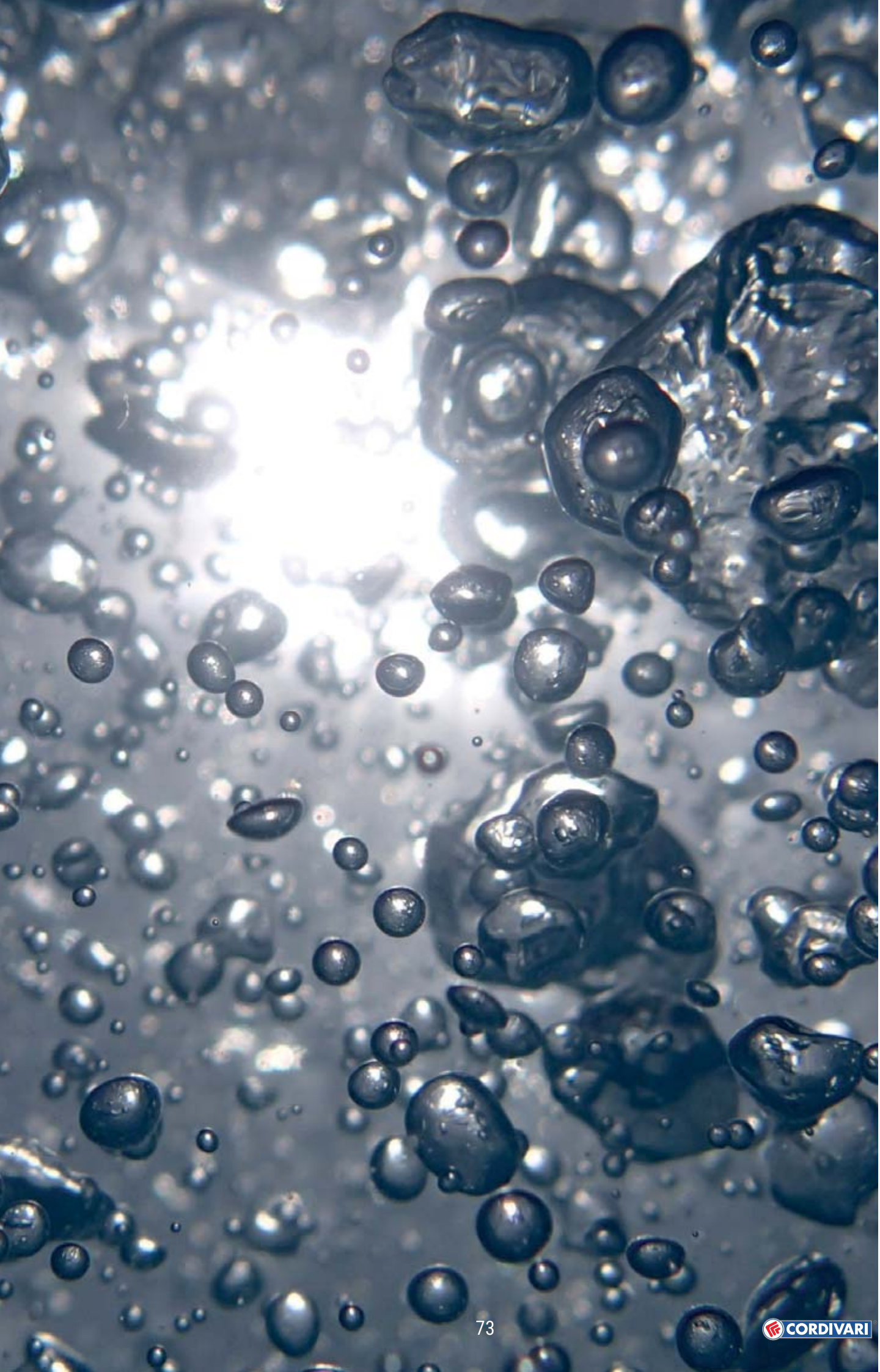

BOLLY® RANGE

Produzione di A.C.S.









	Bolly® ST	Bolly® AP	Bolly® BC	Bolly® SLIM Classe A
Heat exchanger model	Fixed coil heat exchanger			
Number of heat exchangers				
Energy source				
Energy efficiency class	**B-C**	**B-C**	**B-C**	**A**
Insulation	- Polyurethane hard foam - Dismountable polyester fleece	- Polyurethane hard foam	- Polyurethane hard foam - Dismountable polyester fleece	- Polyurethane hard foam
Available range	150 ÷ 1500	150 ÷ 500	150 ÷ 1000	200 ÷ 500
Installation	Floor standing	Floor standing	Floor standing	Floor standing
Suggested Application	Traditional and solar installations	Traditional, solar, condensation and biomass installations	Traditional, solar, condensation and biomass installations	Traditional, solar, condensation and heat pump installations









Bolly® XL	Bolly® Murale Bolly® Primo	Interka	Interka Solare EVO
Fixed coil heat exchanger	Fixed coil heat exchanger	Double walled heat exchanger	Double walled heat exchanger
			
			
B-C	**C**	**C**	**B-C**
- Polyurethane hard foam - Dismountable polyester fleece	- Polyurethane hard foam	- Polyurethane hard foam	- Polyurethane hard foam
200 ÷ 1000	80 ÷ 300	80 ÷ 300	150 ÷ 300
Floor standing	- Vertical wall mounted / horizontal wall mounted (Bolly® Murale) - Vertical wall mounted / horizontal wall mounted / Floor standing (Bolly® Primo)	Wall mounted (vertical/horizontal)	on carpentry of solar systems with natural circulation
Solar, condensation and heat pump installations	Traditional, solar and biomass installations	Biomass and traditional installations	Natural circulation solar installation

BOLLY® **1 ST**

POLYWARM® COATED DOMESTIC HOT WATER CALORIFIER WITH 1 FIXED HEAT EXCHANGER



APPLICATION
Production and storage of domestic hot water (DHW).
MATERIAL
Mild steel Polywarm® coated (Attestation ACS - SSICA - DVGW - W270 - WRAS)
HEAT EXCHANGER
Mild steel Polywarm® coated heat exchanger.
INSULATION
- HARD: High thermal insulation with ecological polyurethane hard foam.
- SOFT: NOFIRE® polyester fleece 100% made of recyclable material, with high thermal insulation. Fire resistance class B-s2d0 according to EN 13501. Grey PVC external lining.

CATHODE PROTECTION
Magnesium anode.
DRAIN
External confluence through drain connection. Models > 500 External confluence through drain connection.
GASKET- FLANGE PLATE
Silicone gaskets suitable for water intended for human consumption (tested according to 98/83/CE), max temperature up to 200°C. Mild steel inspection flange plate with Polywarm®.
WARRANTY
5 years - See general sales conditions and warranty
ACCESSORIES AND SPARE PARTS
See Accessories section for the entire list.

POLYWARM® COATED DHW STORAGE

POLYWARM® COATED HEAT EXCHANGER

BIM FILE AVAILABLE

STOCK AVAILABILITY



cordivari.com/erp



On line ErP label tool



BOLLY® 1 ST WB

Model	HARD FOAM insulation Art. Nr.	HEAT EXCHANGER SURFACE [m²]	ENERGY EFFICIENCY CLASS ErP
150	3105162321101	0,6	**B**
200	3105162321102	0,8	**B**
300	3105162321103	1,2	**B**
400	3105162321104	1,5	**C**
500	3105162321105	1,8	**C**
800	3104162331106	2,7	**B**
1000	3104162331107	3,5	**B**
1500	3104162331108	3,8	**C**



BOLLY® 1 ST WC

Model	DISMOUNTABLE SOFT FLEECE insulation Art. Nr.	HEAT EXCHANGER SURFACE [m²]	ENERGY EFFICIENCY CLASS ErP
800	3103162321136	2,7	**C**
1000	3103162321137	3,5	**C**
1500	3103162321138	3,8	**C**

ACCESSORIES

ELECTRIC IMMERSION HEATERS



Mod.	Heated volume by electric immersion heater [lt]	MONOPHASE 1,5 kW	MONOPHASE 2 kW	MONOPHASE 3 kW	THREEPHASE 4 kW	THREEPHASE 5 kW	THREEPHASE 6 kW	THREEPHASE 9 kW	THREEPHASE 12 kW
		5240000000051	5240000000052	5240000000053	5240000000047	5240000000048	5240000000049	5240000000050	5240000000031
		Ignition time from 10 °C to 45 °C with electric immersion heaters [min]			Ignition time from 10 °C to 45 °C with electric immersion heaters [min]				
150	42	76	57	38	//	//	//	//	//
200	72	128	96	64	//	//	//	//	//
300	113	202	152	101	//	//	//	//	//
400	167	299	225	150	//	//	//	//	//
500	184	329	247	165	//	//	//	//	//
800	313	560	420	280	//	//	//	//	//
1000	383	686	514	343	257	206	171	114	86
1500	557	998	749	499	374	299	250	166	125

"Easy Control" Electronic Display-mounted on tank

ART. NR.	FOR MODELS
5005000310002	WC
5005000310003	WB



Electric immersion heater flange plate

See Accessories section

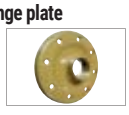

Titanium electronic anode

See Accessories section

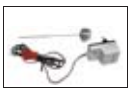

P.E.D. product designed and produced in conformity to the article 4.3 of directive 2014/68/UE - ErP Ecodesgin directive 2009/125/CE

BOLLY® **1 ST**

POLYWARM® COATED DOMESTIC HOT WATER CALORIFIER WITH 1 FIXED HEAT EXCHANGER

	STORAGE		HEAT EXCHANGER	
Model	Pmax	Tmax	Pmax	Tmax
150 ÷ 800	10 bar	90 °C	12 bar	110 °C
1000 ÷ 1500	8 bar			

CORDIVARI Lab

TÜV Rheinland Energie und Umwelt GmbH states that test procedures and Cordivari LAB are certified conforming to European standard EN 15332, as indicated by Ecodesign ErP Directive.

TESTED ErP

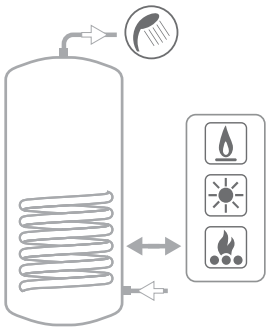

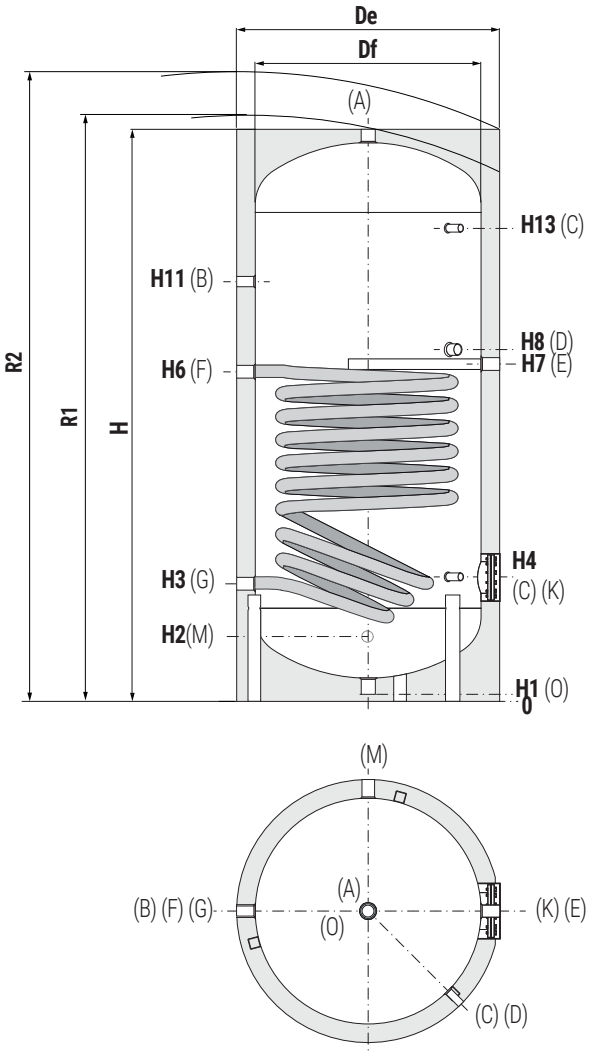

A	Domestic hot water outlet
B	Recirculation
C	Connection for instrumentation 1/2" F
D	Connection for electric immersion heater
E	Connection for magnesium anode 1"1/4 F
F	Lower heat exchanger inlet 1"1/4 F
G	Lower heat exchanger outlet 1"1/4 F
K	Blind flange for inspection
M	Domestic cold water circuit inlet
N	Connection for instrumentation 1/2" F
O	Drain 1" 1/4 F For models < 500
P	Drain for models > 500

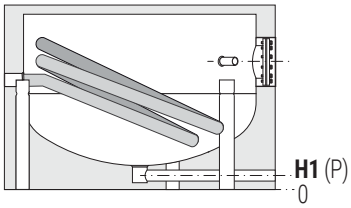

Model	Volume	Weight	Df (vers. WC)	De (vers. WC)	De (vers. WB)	R1 (vers. WC)	R2	H	H1	H2	H3
	[lt]	[Kg]	[mm]		[mm]		[mm]				
150	148	49	//	//	500	//	1500	1414	70	210	275
200	189	55	//	//	550	//	1536	1434	70	220	285
300	291	67	//	//	650	//	1622	1486	70	246	311
400	422	88	//	//	700	//	1900	1766	70	261	326
500	498	120	//	//	750	//	1937	1786	70	271	346
800	789	184	750	950	900	2200	2343	2163	101	493	428
1000	1038	215	850	1050	1000	2265	2432	2217	89	524	439
1500	1443	389	950	1150	1100	2495	2680	2440	109	450	425

Model	H4	H6	H7	H8	H11	H13	K	P	M	D	B	A
	[mm]							Connections F				
150	315	759	815	885	1065	1185	Øi120/Øe180	-	3/4"	1"1/2	3/4"	1"1/4
200	325	811	855	915	1089	1195	Øi120/Øe180	-	3/4"	1"1/2	3/4"	1"1/4
300	381	832	871	931	1101	1221	Øi120/Øe180	-	1"	1"1/2	1"	1"1/4
400	396	988	1033	1091	1286	1486	Øi120/Øe180	-	1"	1"1/2	1"	1"1/4
500	411	1036	1076	1144	1331	1476	Øi120/Øe180	-	1"	1"1/2	1"	1"1/4
800	483	1181	1243	1308	1598	1788	Øi170/Øe240	3/4"	1"	2"	1"	1"1/4
1000	499	1279	1309	1364	1584	1819	Øi170/Øe240	3/4"	1"1/4	2"	1"	1"1/2
1500	575	1403	1450	1515	1825	2065	Øi300/Øe380	1"	1"1/2	2"	1"	2"

P.E.D. product designed and produced in conformity to the article 4.3 of directive 2014/68/UE - ErP Ecodesgin directive 2009/125/CE

CORDIVARI

BOLLY® **1 ST**

HEAT EXCHANGERS TECHNICAL DATA



Data have been calculated on following basis:
1) Primary circuit at T1 and proper energy source;
2) Production of DHW in continuous way from 10 °C at t2;
3) DHW that can be taken in the first 10' and in the first hour from storage at 60°C, input 10°C and output 45°C;
4) Sanitary water according to UNI CTI 8065.

LOWER
HEAT EXCHANGER

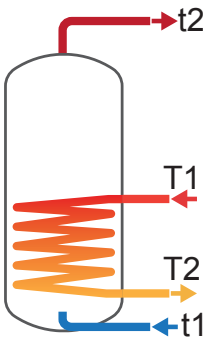

Model	Primary Flow rate	Ignition time (minutes) from 10 °C to t2 and primary at T1				Maximum power exchange (kW) with primary at T1, secondary within 10-45 °C and constant use of DHW production				DHW continuous production lt/h within 10-45 °C and primary at T1			
	[m³/h]	T1/t2				T1				T1			
		55/50	65/60	70/60	80/60	55	65	70	80	55	65	70	80
150	2	99	102	71	46	6,6	10	11,7	15,2	162	246	288	371
	1	111	116	81	53	6,1	9,1	10,6	13,2	149	223	260	336
200	2,5	92	95	66	43	9	13,5	15,8	20,5	220	332	389	506
	1,25	103	107	75	49	8,3	12,3	14,4	18,5	203	303	354	456
300	3	97	101	70	45	13,5	20,2	23,6	30,6	331	498	583	756
	1,5	106	111	78	51	12,5	18,5	21,5	27,5	307	455	529	680
400	3,5	105	110	76	50	16,9	25,4	29,6	38,3	416	625	731	947
	1,75	117	122	86	57	15,4	23,2	26,9	34,5	387	571	664	853
500	3,5	111	116	81	53	20,2	30,1	35,1	45,3	496	742	867	1121
	1,75	126	131	93	61	18,7	27,3	31,7	40,6	459	674	782	1000
800	6	116	120	84	55	30,3	45,4	53	68,6	746	1120	1309	1695
	3	131	136	96	64	28,2	41,4	48,1	61,6	692	1021	1186	1521
1000	6	114	119	84	56	38,9	57,9	67,5	87	958	1429	1667	2151
	3	132	138	98	65	35,5	52,2	60,4	77	882	1288	1492	1903
1500	6	162	168	119	78	41	61	71	91,5	1009	1504	1753	2261
	3	189	197	139	92	37,7	54,9	63,4	80,7	927	1352	1564	1993

Model	Primary Flow rate	DHW produced in the first 10 minutes in lt/10' input 10 °C output 45 °C, storage at t2 and primary at T1				DHW produced in the first hour in lt/60' input 10 °C output 45 °C, storage at t2 and primary at T1				Heat exchanger pressure loss	
	[m³/h]	T1/t2				T1/t2				[mm H_2O]	[mbar]
		55/50	65/60	70/60	80/60	55/50	65/60	70/60	80/60		
150	2	195	251	258	272	298	407	440	507	218,85	21,46
	1	193	247	253	266	287	388	418	479	60,62	5,95
200	2,5	253	325	335	354	392	536	581	675	441,12	43,26
	1,25	250	321	329	346	378	512	553	635	122,19	11,98
300	3	388	499	513	542	597	814	882	1021	927,45	90,95
	1,5	384	492	504	529	578	780	839	960	256,91	25,19
400	3,5	550	706	723	759	814	1101	1186	1359	1480,67	145,20
	1,75	546	697	712	744	791	1058	1133	1284	410,16	40,22
500	3,5	651	834	855	897	965	1304	1404	1607	1850,84	181,50
	1,75	645	822	840	877	935	1249	1336	1510	512,70	50,28
800	6	1026	1314	1345	1410	1499	2023	2174	2483	1538,50	150,87
	3	1017	1297	1325	1381	1455	1944	2076	2344	426,18	41,79
1000	6	1345	1720	1759	1840	1952	2625	2815	3202	1994,35	195,58
	3	1332	1696	1730	1799	1891	2512	2675	3004	552,45	54,18
1500	6	1870	2378	2419	2504	2509	3330	3530	3936	2108,31	206,75
	3	1856	2352	2388	2459	2443	3209	3378	3722	584,02	57,27

HEAT EXCHANGERS PRESSURE LOSS

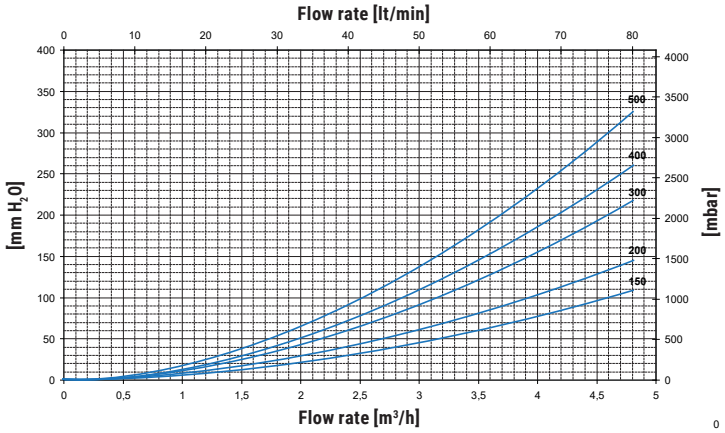

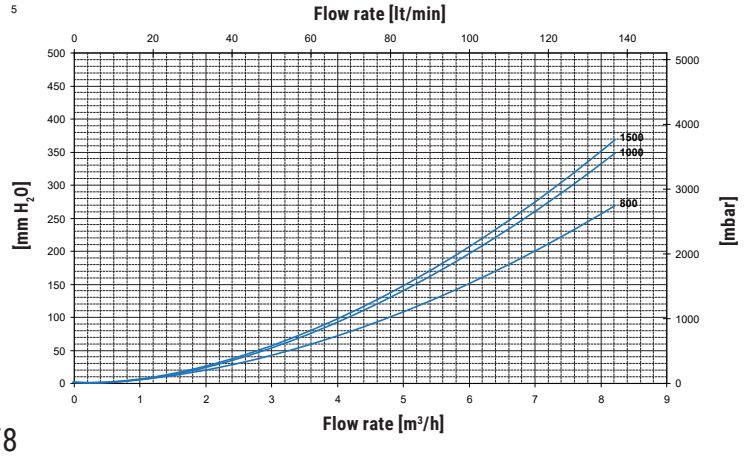

BOLLY® **1 ST**

HEAT EXCHANGERS TECHNICAL DATA



Heat Exchanger output referred to temperature and flow rate of primary circuit and with secondary at 10/45°C at maximum withdrawal of producible DHW (Upper limit of the curves referred to maximum primary flow rate in the heat exchanger, while the lower limit in the curves refer to the minimum primary flow rate).

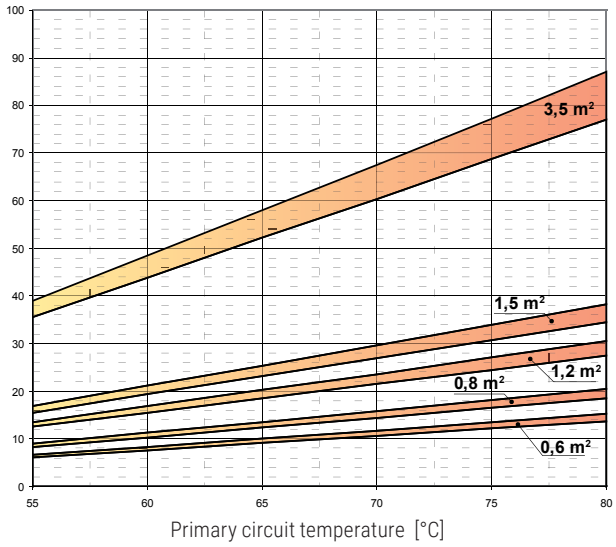

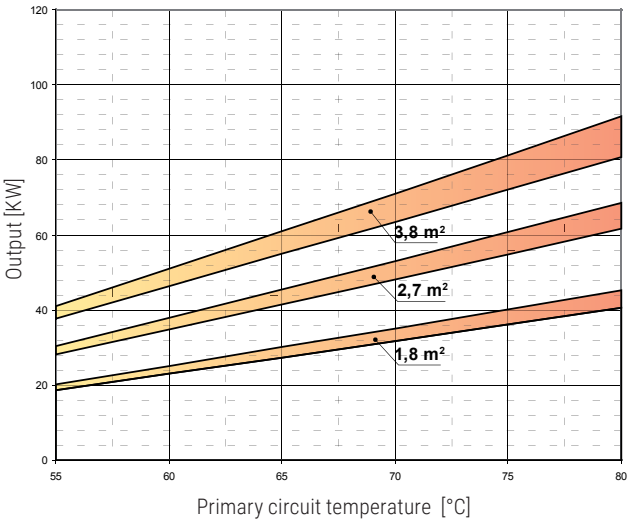

Heat exchanger surface	0,6 m²		0,8 m²		1,2 m²		1,5 m²		3,5 m²	
Flow rate [m³/h]	MAX	MIN	MAX	MIN	MAX	MIN	MAX	MIN	MAX	MIN
	2	1	2,5	1,25	3	1,5	3,5	1,75	6	3

Heat exchanger surface	1,8 m²		2,7 m²		3,8 m²	
Flow rate [m³/h]	MAX	MIN	MAX	MIN	MAX	MIN
	3,50	1,75	6	3	6	3

EXAMPLE OF INSTALLATION WITH **BOLLY® 1 ST**

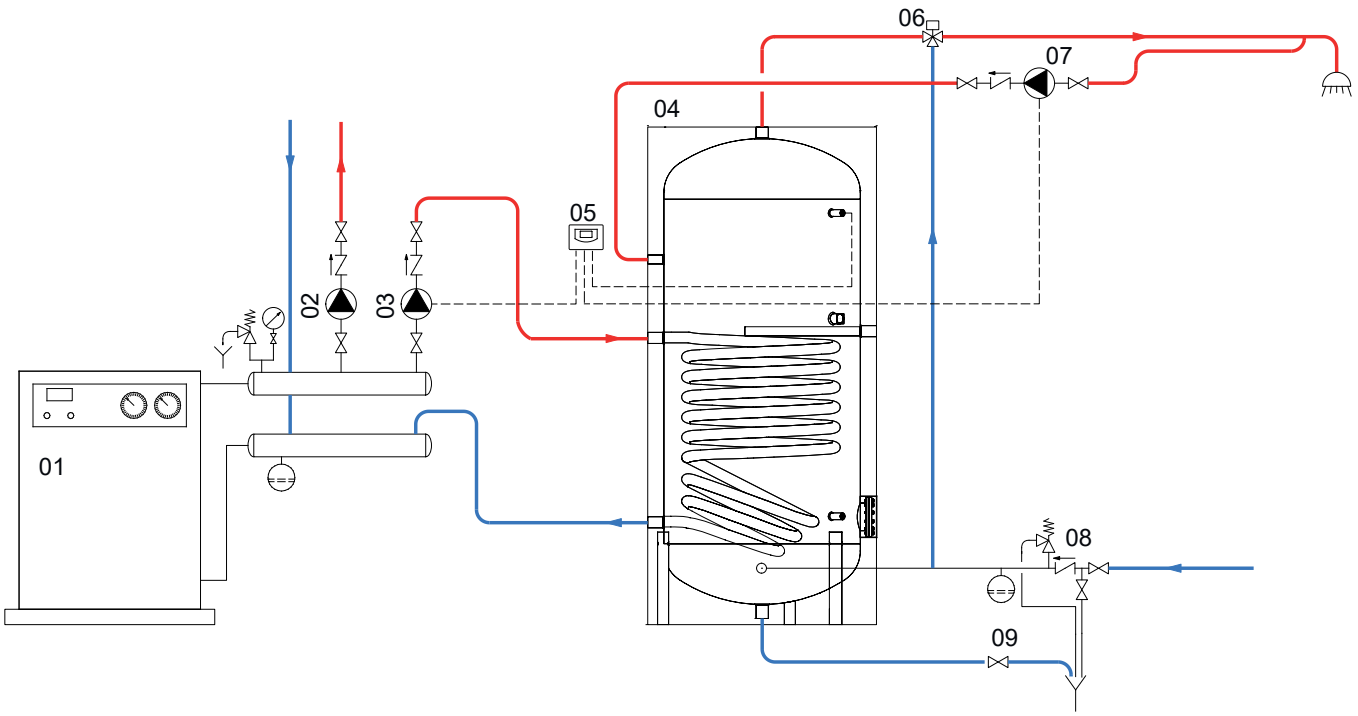

01	Generator	04	BOLLY® 1 ST	07	D.H.W. recirculation group
02	Heating system circulation group	05	Easy Control electronic display/ thermostat	08	Hydraulic safety group
03	D.H.W. circulation group	06	Thermostatic mixing valve	09	Blowdown valve

BOLLY® **2 ST**

POLYWARM® COATED DOMESTIC HOT WATER CALORIFIER WITH 2 FIXED HEAT EXCHANGERS



APPLICATION
Production and storage of domestic hot water (DHW).
MATERIALI E FINITURE
Mild steel Polywarm® coated (Attestation ACS - SSICA - DVGW - W270 - WRAS)
HEAT EXCHANGER
2 mild steel Polywarm® coated heat exchangers.
INSULATION
- HARD: High thermal insulation with ecological polyurethane hard foam.
- SOFT: NOFIRE® polyester fleece 100% made of recyclable material, with high thermal insulation. Fire resistance class B-s2d0 according to EN 13501. Grey PVC external lining.

CATHODE PROTECTION
Magnesium anode.
DRAIN
External confluence through drain connection. Models > 500 External confluence through drain connection.
GASKET- FLANGE PLATE
Silicone gaskets suitable for water intended for human consumption (tested according to 98/83/CE), max temperature up to 200°C. Mild steel inspection flange plate with Polywarm®.
WARRANTY
5 years - See general sales conditions and warranty
ACCESSORIES AND SPARE PARTS
See Accessories section for the entire list.

POLYWARM® COATED DHW STORAGE

POLYWARM® COATED HEAT EXCHANGER

BIM FILE AVAILABLE

STOCK AVAILABILITY



cordivari.com/erp



On line ErP label tool

BOLLY® 2 ST WB

Model	HARD FOAM insulation	HEAT EXCHANGER SURFACE Upper	Lower	ENERGY EFFICIENCY CLASS
	Art. Nr.	[m²]		
150	3135162321201	0,4	0,6	**B**
200	3135162321202	0,5	0,8	**B**
300	3135162321203	0,7	1,2	**B**
400	3135162321204	1	1,5	**C**
500	3135162321205	1	1,8	**C**
800	3134162331206	1,6	2,7	**B**
1000	3134162331207	1,8	3,5	**B**
1500	3134162331208	1,9	3,8	**C**

BOLLY® 2 ST WC

Model	DISMOUNTABLE SOFT FLEECE insulation	HEAT EXCHANGER SURFACE Upper	Lower	ENERGY EFFICIENCY CLASS
	Art. Nr.	[m²]		
800	3138162321226	1,6	2,7	**C**
1000	3138162321227	1,8	3,5	**C**
1500	3138162321228	1,9	3,8	**C**

ACCESSORIES

ELECTRIC IMMERSION HEATERS



Mod.	Heated volume by electric immersion heater [lt]	MONOPHASE 1,5 kW	2 kW	3 kW	THREEPHASE 4 kW	5 kW	6 kW	9 kW	12 kW
		5240000000051	5240000000052	5240000000053	5240000000047	5240000000048	5240000000049	5240000000050	5240000000031
		Ignition time from 10 °C to 45 °C with electric immersion heaters [min]			Ignition time from 10 °C to 45 °C with electric immersion heaters [min]				
150	42	76	57	38	//	//	//	//	//
200	72	128	96	64	//	//	//	//	//
300	113	202	152	101	//	//	//	//	//
400	167	299	225	150	//	//	//	//	//
500	184	329	247	165	//	//	//	//	//
800	313	560	420	280	//	//	//	//	//
1000	383	686	514	343	257	206	171	114	86
1500	557	998	749	499	374	299	250	166	125

"Easy Control" Electronic Display-mounted on tank

ART. NR.	FOR MODELS
5005000310002	WC
5005000310003	WB



Electric immersion heater flange plate

See Accessories section



Titanium electronic anode

See Accessories section

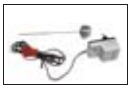

P.E.D. product designed and produced in conformity to the article 4.3 of directive 2014/68/UE - ErP Ecodesgin directive 2009/125/CE

BOLLY® **2 ST**

POLYWARM® COATED DOMESTIC HOT WATER CALORIFIER WITH 2 FIXED HEAT EXCHANGERS

	STORAGE		HEAT EXCHANGER	
Model	Pmax	Tmax	Pmax	Tmax
150 ÷ 800	10 bar	90 °C	12 bar	110 °C
1000 ÷ 1500	8 bar			

CORDIVARI Lab

TÜV Rheinland Energie und Umwelt GmbH states that test procedures and Cordivari LAB are certified conforming to European standard EN 15332, as indicated by Ecodesign ErP Directive.

TESTED ErP

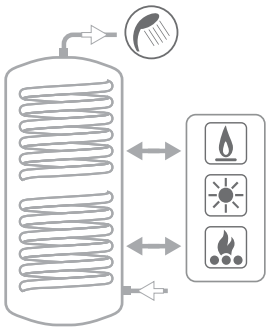

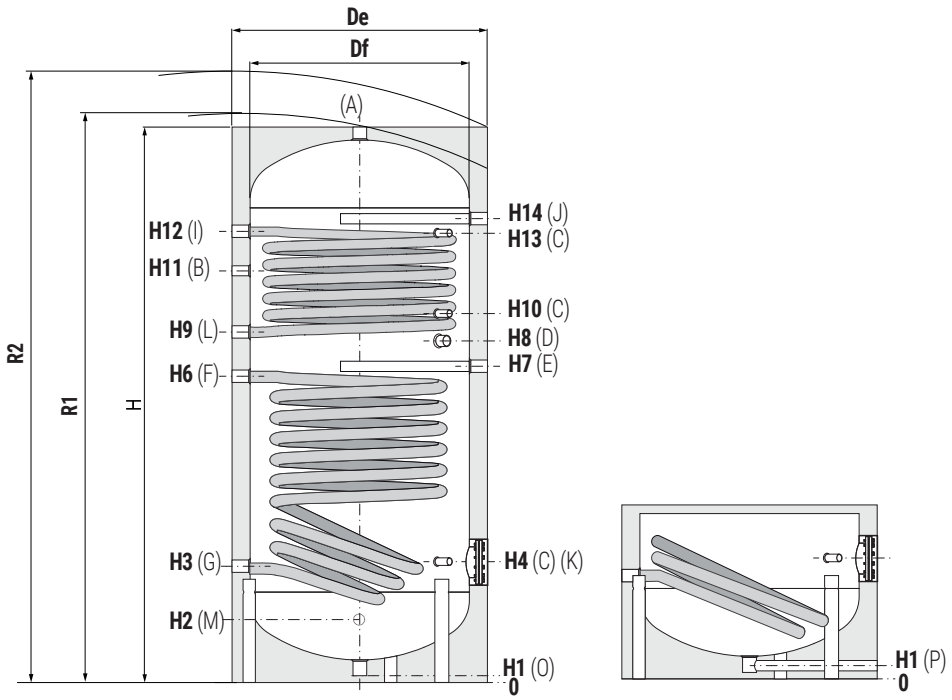

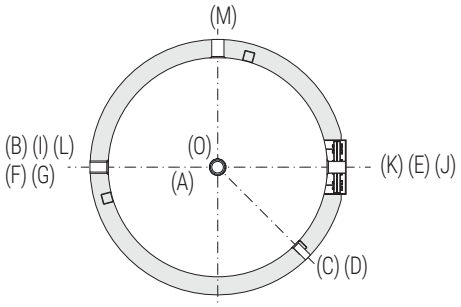

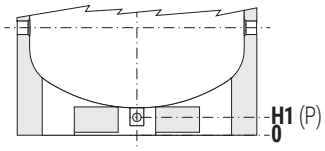

A	Domestic hot water outlet
B	Recirculation
C	Connection for instrumentation 1/2" F
D	Connection for electric immersion heater
E	Connection for magnesium anode 1"1/4 F
F	Lower heat exchanger inlet 1"1/4 F
G	Lower heat exchanger outlet 1"1/4 F
I	Upper heat exchanger inlet 1"1/4 F
J	Connection for 2nd magnesium anode 1"1/4 F (only for models>500)
K	Blind flange for inspection
L	Upper heat exchanger outlet 1"1/4 F
M	Domestic cold water circuit inlet
N	Connection for instrumentation 1/2" F
O	Drain 1" 1/4 F for models < 500
P	Drain for models > 500

Models 1500 have two gripps on the bottom **which a**llow the use of forklift when handling and drain pipe already fitted.

Model	Volume	Weight	Df (vers. WC)	De (vers. WC)	De (vers. WB)	R1 (vers. WC)	R1 (vers. WB)	R2	H	H1	H2	H3	H4
	[lt]	[Kg]	[mm]		[mm]	[mm]		[mm]					
150	148	54	//	//	500	//	//	1500	1414	70	210	275	315
200	189	65	//	//	550	//	//	1536	1434	70	220	285	325
300	291	83	//	//	650	//	//	1622	1486	70	246	311	381
400	422	112	//	//	700	//	//	1900	1766	70	261	326	396
500	498	134	//	//	750	//	//	1937	1786	70	271	346	411
800	789	232	750	950	900	2200	//	2343	2163	101	493	428	483
1000	1038	272	850	1050	1000	2265	//	2432	2217	89	524	439	499
1500	1443	351	950	1150	1100	2495	//	2680	2440	109	450	425	575

Model	H6	H7	H8	H9	H10	H11	H12	H13	H14	K	P	M	D	B	A
	[mm]										Connections F				
150	759	815	885	945	1035	1065	1185	1185	//	Øi120/Øe180	-	3/4"	1"1/2	3/4"	1"1/4
200	811	855	915	960	1105	1089	1195	1195	//	Øi120/Øe180	-	3/4"	1"1/2	3/4"	1"1/4
300	832	871	931	981	1076	1101	1221	1221	//	Øi120/Øe180	-	1"	1"1/2	1"	1"1/4
400	988	1033	1091	1143	1286	1286	1486	1486	//	Øi120/Øe180	-	1"	1"1/2	1"	1"1/4
500	1036	1076	1144	1186	1296	1331	1476	1476	//	Øi120/Øe180	-	1"	1"1/2	1"	1"1/4
800	1181	1243	1308	1362	1579	1598	1770	1788	1808	Øi170/Øe240	3/4"	1"	2"	1"	1"1/4
1000	1279	1309	1364	1399	1609	1584	1819	1819	1839	Øi170/Øe240	3/4"	1"1/4	2"	1"	1"1/2
1500	1403	1450	1515	1550	2045	1825	2065	1735	2065	Øi300/Øe380	1"	1"1/2	2"	1"	2"

P.E.D. product designed and produced in conformity to the article 4.3 of directive 2014/68/UE - ErP Ecodesgin directive 2009/125/CE

BOLLY® **2 ST**

HEAT EXCHANGERS TECHNICAL DATA



Data have been calculated on following basis:
1) Primary circuit at T1 and proper energy source;
2) Production of DHW in continuous way from 10 °C at t2;
3) DHW that can be taken in the first 10' and in the first hour from storage at 60°C, input 10°C and output 45°C;
4) Sanitary water according to UNI CTI 8065.

UPPER
HEAT EXCHANGER

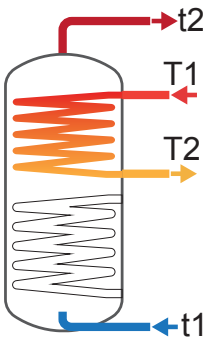

Model	Primary Flow rate	Ignition time (minutes) from 10 °C to t2 and primary at T1				Maximum power exchange (kW) with primary at T1, secondary within 10-45 °C and constant use of DHW production				DHW continuous production lt/h within 10-45 °C and primary at T1			
	[m³/h]	T1/t2				T1				T1			
		55/50	65/60	70/60	80/60	55	65	70	80	55	65	70	80
150	2	47	49	34	22	4,5	6,8	7,9	10,3	109	165	194	254
	1	52	64	38	24	4,1	6,2	7,2	9,4	100	151	177	231
200	2,5	46	48	33	21	5,7	8,6	10	13,1	138	210	247	322
	1,25	51	53	37	24	5,3	7,9	9,3	12	129	194	227	296
300	3	51	53	37	24	8	12,1	14,1	18,4	195	296	347	453
	1,5	57	59	41	27	7,5	11,2	13,1	16,9	183	274	321	416
400	3,5	55	57	40	26	11,4	17,2	20,2	26,2	279	423	496	646
	1,75	61	63	44	29	10,7	16	18,6	24	262	392	458	592
500	3,5	61	64	44	29	11,4	17,2	20,2	26,2	279	423	496	646
	1,75	68	70	49	32	10,7	16	18,6	24	262	392	458	592
800	6	68	71	49	32	18,3	27,6	32,3	41,9	447	677	794	1034
	3	75	78	54	36	17,2	25,6	29,8	38,5	419	628	733	949
1000	6	79	82	57	37	20,5	30,9	36,1	46,9	501	759	889	1157
	3	87	91	64	42	19,2	28,5	33,3	42,9	469	701	818	1057
1500	6	87	90	63	41	26	39	45,6	59,1	636	959	1123	1457
	3	97	102	71	46	24,2	35,8	41,6	53,6	592	879	1024	1318

Model	Primary Flow rate	DHW produced in the first 10 minutes in lt/10' input 10 °C output 45 °C, storage at t2 and primary at T1				DHW produced in the first hour in lt/60' input 10 °C output 45 °C, storage at t2 and primary at T1				Heat exchanger pressure loss	
	[m³/h]	T1/t2				T1/t2				[mm H_2O]	[mbar]
		55/50	65/60	70/60	80/60	55/50	65/60	70/60	80/60		
150	2	73	96	101	111	142	201	224	272	145,90	14,31
	1	72	94	98	107	135	189	210	253	40,41	3,96
200	2,5	92	121	127	139	179	254	283	343	275,70	27,04
	1,25	90	118	124	135	172	241	267	323	76,37	7,49
300	3	141	185	194	211	265	373	413	498	541,01	53,06
	1,5	139	181	189	205	255	355	393	469	149,87	14,70
400	3,5	211	276	288	313	388	544	603	723	1028,24	100,84
	1,75	208	271	282	304	374	519	572	679	284,83	27,93
500	3,5	229	299	311	336	406	567	625	745	1028,24	100,84
	1,75	227	294	305	327	392	542	595	702	284,83	27,93
800	6	401	521	541	581	684	950	1044	1236	911,70	89,41
	3	397	513	531	567	662	911	995	1168	252,55	24,77
1000	6	508	657	678	723	825	1137	1241	1456	1025,66	100,58
	3	502	647	666	706	799	1091	1184	1376	284,12	27,86
1500	6	691	891	919	974	1094	1499	1630	1897	1310,57	128,52
	3	684	878	902	951	1059	1435	1551	1786	363,04	35,60

BOLLY® **2 ST**

HEAT EXCHANGERS TECHNICAL DATA



Data have been calculated on following basis:
1) Primary circuit at T1 and proper energy source;
2) Production of DHW in continuous way from 10 °C at t2;
3) DHW that can be taken in the first 10' and in the first hour from storage at 60°C, input 10°C and output 45°C;
4) Sanitary water according to UNI CTI 8065.

LOWER
HEAT EXCHANGER

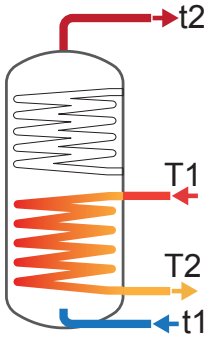

Model	Primary Flow rate	Ignition time (minutes) from 10 °C to t2 and primary at T1				Maximum power exchange (kW) with primary at T1, secondary within 10-45 °C and constant use of DHW production				DHW continuous production lt/h within 10-45 °C and primary at T1			
	[m³/h]	T1/t2				T1				T1			
		55/50	65/60	70/60	80/60	55	65	70	80	55	65	70	80
150	2	99	102	71	46	6,6	10	11,7	15,2	162	246	288	371
	1	111	116	81	53	6,1	9,1	10,6	13,2	149	223	260	336
200	2,5	92	95	66	43	9	13,5	15,8	20,5	220	332	389	506
	1,25	103	107	75	49	8,3	12,3	14,4	18,5	203	303	354	456
300	3	97	101	70	45	13,5	20,2	23,6	30,6	331	498	583	756
	1,5	106	111	78	51	12,5	18,5	21,5	27,5	307	455	529	680
400	3,5	105	110	76	50	16,9	25,4	29,6	38,3	416	625	731	947
	1,75	117	122	86	57	15,4	23,2	26,9	34,5	387	571	664	853
500	3,5	111	116	81	53	20,2	30,1	35,1	45,3	496	742	867	1121
	1,75	126	131	93	61	18,7	27,3	31,7	40,6	459	674	782	1000
800	6	116	120	84	55	30,3	45,4	53	68,6	746	1120	1309	1695
	3	131	136	96	64	28,2	41,4	48,1	61,6	692	1021	1186	1521
1000	6	114	119	84	56	38,9	57,9	67,5	87	958	1429	1667	2151
	3	132	138	98	65	35,5	52,2	60,4	77	882	1288	1492	1903
1500	6	162	168	119	78	41	61	71	91,5	1009	1504	1753	2261
	3	189	197	139	92	37,7	54,9	63,4	80,7	927	1352	1564	1993

Model	Primary Flow rate	DHW produced in the first 10 minutes in lt/10' input 10 °C output 45 °C, storage at t2 and primary at T1				DHW produced in the first hour in lt/60' input 10 °C output 45 °C, storage at t2 and primary at T1				Heat exchanger pressure loss	
	[m³/h]	T1/t2				T1/t2				[mm H_2O]	[mbar]
		55/50	65/60	70/60	80/60	55/50	65/60	70/60	80/60		
150	2	195	251	258	272	298	407	440	507	218,85	21,46
	1	193	247	253	266	287	388	418	479	60,62	5,95
200	2,5	253	325	335	354	392	536	581	675	441,12	43,26
	1,25	250	321	329	346	378	512	553	635	122,19	11,98
300	3	388	499	513	542	597	814	882	1021	927,45	90,95
	1,5	384	492	504	529	578	780	839	960	256,91	25,19
400	3,5	550	706	723	759	814	1101	1186	1359	1480,67	145,20
	1,75	546	697	712	744	791	1058	1133	1284	410,16	40,22
500	3,5	651	834	855	897	965	1304	1404	1607	1850,84	181,50
	1,75	645	822	840	877	935	1249	1336	1510	512,70	50,28
800	6	1026	1314	1345	1410	1499	2023	2174	2483	1538,50	150,87
	3	1017	1297	1325	1381	1455	1944	2076	2344	426,18	41,79
1000	6	1345	1720	1759	1840	1952	2625	2815	3202	1994,35	195,58
	3	1332	1696	1730	1799	1891	2512	2675	3004	552,45	54,18
1500	6	1870	2378	2419	2504	2509	3330	3530	3936	2108,31	206,75
	3	1856	2352	2388	2459	2443	3209	3378	3722	584,02	57,27

BOLLY® **2 ST**

UPPER HEAT EXCHANGERS PRESSURE LOSS



Heat exchangers surface [m²]	
150	0,4
200	0,5
300	0,7
400	1
500	1
800	1,6
1000	1,8
1500	1,9

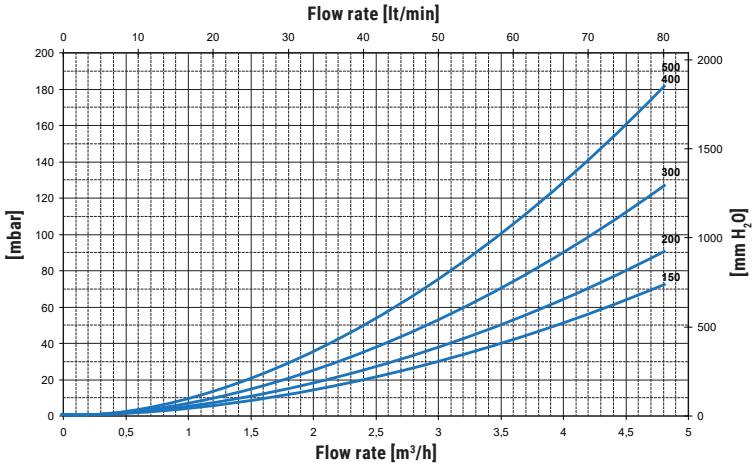

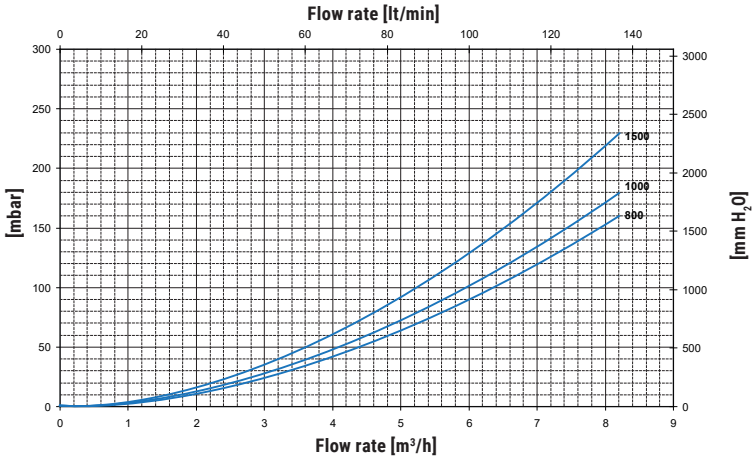

LOWER HEAT EXCHANGERS PRESSURE LOSS

Heat exchangers surface [m²]	
150	0,6
200	0,8
300	1,2
400	1,5
500	1,8
800	2,7
1000	3,5
1500	3,8

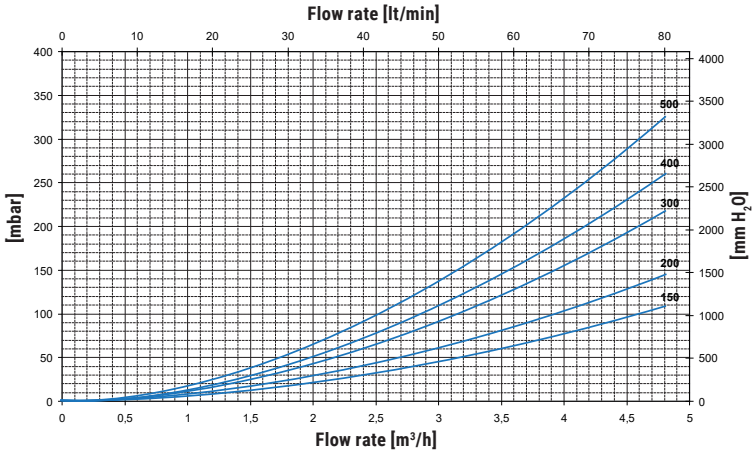

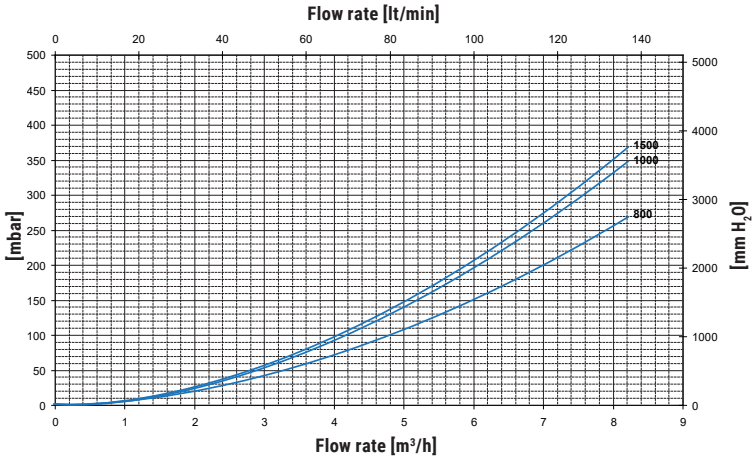

BOLLY® **2 ST**

UPPER HEAT EXCHANGERS TECHNICAL DATA



Heat Exchanger output referred to temperature and flow rate of primary circuit and with secondary at 10/45°C at maximum withdrawal of producible DHW (Upper limit of the curves referred to maximum primary flow rate in the heat exchanger, while the lower limit in the curves refer to the minimum primary flow rate).
LOWER heat exchangers technical data - see BOLLY® 1 ST

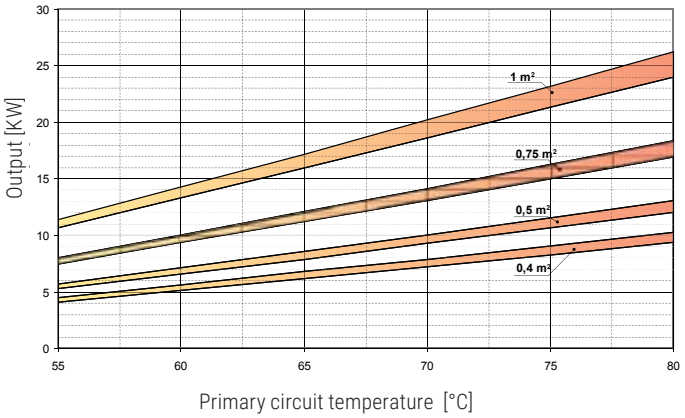

Heat exchanger surface	0,4 m²		0,8 m²		1,2 m²		1,5 m²		3,5 m²	
Flow rate [m³/h]	MAX	MIN	MAX	MIN	MAX	MIN	MAX	MIN	MAX	MIN
	2	1	2,5	1,25	3	1,5	3,5	1,75	6	3

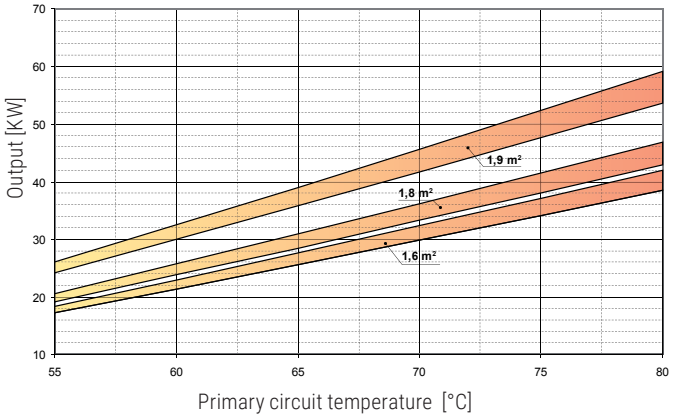

Heat exchanger surface	1,6 m²		1,8 m²		1,9 m²	
Flow rate [m³/h]	MAX	MIN	MAX	MIN	MAX	MIN
	6	3	6	3	6	3

EXAMPLE OF INSTALLATION WITH **BOLLY® 2 ST**

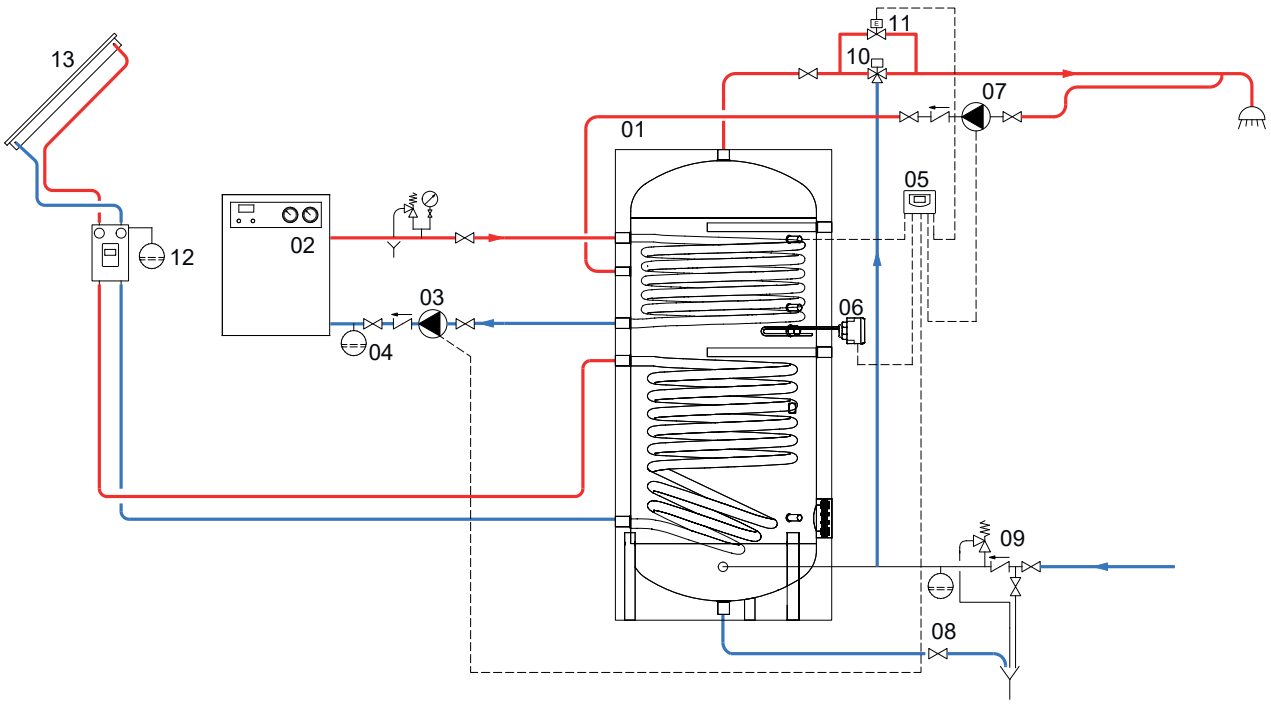

1	Bolly® 2 St	5	Easy Control electronic display/ thermostat	9	Hydraulic safety group	13	Solar panels
2	Generator	6	Electric immersion heater (optional)	10	Thermostatic mixing valve		
3	Circulation group	7	D.H.W. recirculation group	11	By-pass solenoid valve		
4	Expansion vessel	8	Blowdown valve	12	Solar system circulation group		

BOLLY® **1 BC**

POLYWARM® COATED DOMESTIC HOT WATER CALORIFIER WITH 1 FIXED HEAT EXCHANGER AND CONNECTIONS ALIGNED ON THE BACK



APPLICATION
Production and storage of domestic hot water (DHW).
MATERIAL
Mild steel Polywarm® coated (Attestation ACS - SSICA - DVGW - W270 - WRAS)
HEAT EXCHANGER
Mild steel Polywarm® coated heat exchanger.
INSULATION
- HARD: High thermal insulation with ecological polyurethane hard foam.
- SOFT: NOFIRE® polyester fleece 100% made of recyclable material, with high thermal insulation. Fire resistance class B-s2d0 according to EN 13501. Grey PVC external lining.

CATHODE PROTECTION
Magnesium anode.
DRAIN
External confluence through drain connection. Models > 500 External confluence through drain connection.
GASKET- FLANGE PLATE
Silicone gaskets suitable for water intended for human consumption (tested according to 98/83/CE), max temperature up to 200°C. Mild steel inspection flange plate with Polywarm®.
WARRANTY
5 years - See general sales conditions and warranty
ACCESSORIES AND SPARE PARTS
See Accessories section for the entire list.

NEW

POLYWARM® COATED DHW STORAGE

POLYWARM® COATED HEAT EXCHANGER



cordivari.com/erp

On line ErP label tool

BOLLY® 1 BC WB

Model	HARD FOAM insulation Art. Nr.	HEAT EXCHANGER SURFACE [m²]	ENERGY EFFICIENCY CLASS
150	3105162322101	1,03	**B**
200	3105162322102	1,42	**B**
300	3105162325203	1,6	**B**
400	3105162322104	1,93	**C**
500	3105162322105	2,63	**C**

BOLLY® 1 BC WC

Model	DISMOUNTABLE SOFT FLEECE insulation Art. Nr.	HEAT EXCHANGER SURFACE [m²]	ENERGY EFFICIENCY CLASS
800	3103162320108	2,9	**C**
1000	3103162320109	3,5	**C**

ACCESSORIES

ELECTRIC IMMERSION HEATERS

Mod.	Heated volume by electric immersion heater [lt]	MONOPHASE **1,5** kW	**2** kW	**3** kW
		5240000000051	5240000000052	5240000000053
		Ignition time from 10 °C to 45 °C with electric immersion heaters [min]		
150	42	76	57	38
200	72	128	96	64
300	113	202	152	101
400	167	299	225	150
500	184	329	247	165
800	243	395	296	198
1000	351	572	429	286

"Easy Control" Electronic Display-mounted on tank

ART. NR.	FOR MODELS
5005000310002	WC
5005000310003	WB



Electric immersion heater flange plate

See Accessories section



Titanium electronic anode

See Accessories section

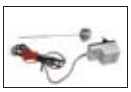

P.E.D. product designed and produced in conformity to the article 4.3 of directive 2014/68/UE - ErP Ecodesgin directive 2009/125/CE

BOLLY® **1 BC**

POLYWARM® COATED DOMESTIC HOT WATER CALORIFIER WITH 1 FIXED HEAT EXCHANGER AND CONNECTIONS ALIGNED ON THE BACK

	STORAGE		HEAT EXCHANGER	
Model	Pmax	Tmax	Pmax	Tmax
150 ÷ 800	10 bar	90 °C	12 bar	110 °C
1000	8 bar			

CORDIVARI Lab

TÜV Rheinland Energie und Umwelt GmbH states that test procedures and Cordivari LAB are certified conforming to European standard EN 15332, as indicated by Ecodesign ErP Directive.

TESTED ErP

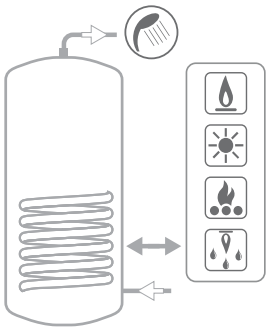

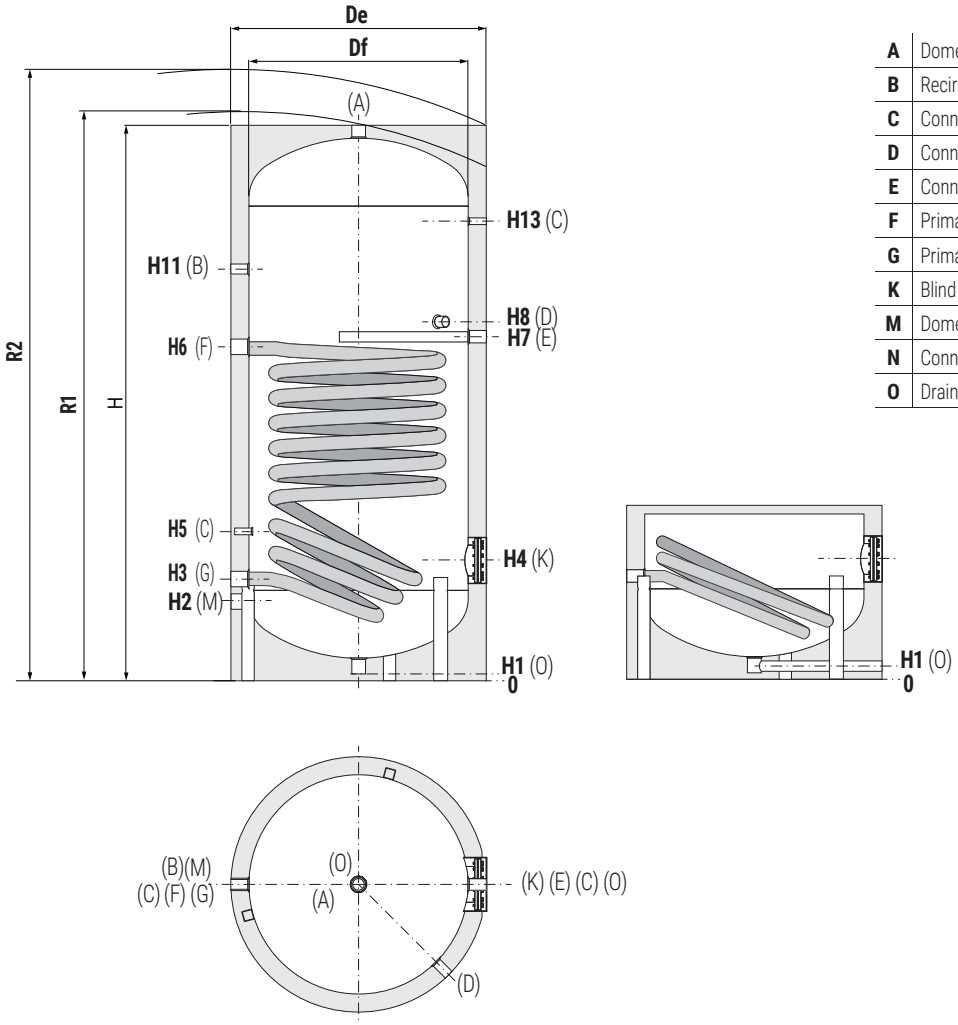

A	Domestic hot water outlet
B	Recirculation
C	Connection for instrumentation 1/2" F
D	Connection for electric immersion heater
E	Connection for magnesium anode 1"1/4 F
F	Primary circuit inlet
G	Primary circuit outlet
K	Blind flange for inspection
M	Domestic cold water circuit inlet
N	Connection for instrumentation 1/2" F
O	Drain 1" 1/4 F. For model 1000 connection 1"1/2 F

BOLLY® 1 BC WB - HARD FOAM INSULATION

Model	Volume	Weight	De	H	R2	H1	H2	H3	H4	H5	H6	H7	H8	H11	H12	K	A -M	B	D	F - G
	[lt]	[kg]	[mm]														Connections F			
150	148	46	500	1410	1500	65	199	307	309	449	887	929	994	1069	1179	Øi120/Øe180	1"1/4	3/4"	1"1/2	1"1/4
200	190	55	550	1430	1530	65	209	314	319	474	952	979	1039	1084	1189	Øi120/Øe180	1"1/4	3/4"	1"1/2	1"1/4
300	292	65	650	1480	1620	65	240	358	375	473	907	945	1005	1095	1215	Øi120/Øe180	1"1/4	1"	1"1/2	1"1/4
400	422	88	700	1760	1890	65	250	358	390	530	977	1027	1085	1274	1480	Øi120/Øe180	1"1/4	1"	1"1/2	1"1/4
500	498	112	750	1780	1930	65	260	368	405	495	1118	1140	1190	1345	1470	Øi120/Øe180	1"1/4	1"	1"1/2	1"1/4

BOLLY® 1 BC WC - DISMOUNTABLE SOFT FLEECE INSULATION

Mod.	Vol.	Weight	De	Df	H	R1	R2	H1	H2	H3	H4	H5	H6	H7	H8	H11	H12	K	A M	B	D	F - G
	[lt]	[kg]	[mm]																Connections F			
800	789	181	970	750	2160	2230	2370	69	338	463	483	648	1339	1263	1468	1632	1788	Øi170/Øe240	1"1/2	1"	2"	1"1/4
1000	1037	211	1070	850	2195	2290	2440	57	359	499	499	639	1339	1259	1439	1629	1819	Øi170/Øe240	1"1/2	1"	2"	1"1/4

P.E.D. product designed and produced in conformity to the article 4.3 of directive 2014/68/UE - ErP Ecodesgin directive 2009/125/CE

BOLLY® **2 BC**

POLYWARM® COATED DOMESTIC HOT WATER CALORIFIER WITH 2 FIXED HEAT EXCHANGERS AND CONNECTIONS ALIGNED ON THE BACK



APPLICATION
Production and storage of domestic hot water (DHW).
MATERIAL
Mild steel Polywarm® coated (Attestation ACS - SSICA - DVGW - W270 - WRAS)
HEAT EXCHANGER
N° 2 mild steel Polywarm® coated heat exchangers.
INSULATION
- HARD: High thermal insulation with ecological polyurethane hard foam.
- SOFT: NOFIRE® polyester fleece 100% made of recyclable material, with high thermal insulation. Fire resistance class B-s2d0 according to EN 13501. Grey PVC external lining.

CATHODE PROTECTION
Magnesium anode.
DRAIN
External confluence through drain connection. Models > 500 External confluence through drain connection.
GASKET- FLANGE PLATE
Silicone gaskets suitable for water intended for human consumption (tested according to 98/83/CE), max temperature up to 200°C. Mild steel inspection flange plate with Polywarm®.
WARRANTY
5 years - See general sales conditions and warranty
ACCESSORIES AND SPARE PARTS
See Accessories section for the entire list.

NEW

POLYWARM® COATED DHW STORAGE

POLYWARM® COATED HEAT EXCHANGER

BOLLY® 2 BC WSB

Model	HARD FOAM insulation	HEAT EXCHANGER SURFACE Upper	Lower	ENERGY EFFICIENCY CLASS
	Art. Nr.	[m²]		
200	3135162322202	0,41	1,25	**B**
300	3135162325103	0,67	1,41	**B**
400	3135162322204	1,34	1,93	**C**
500	3135162322205	0,99	2,63	**C**



cordivari.com/erp



On line ErP label tool

BOLLY® 2 BC WSC

Model	DISMOUNTABLE SOFT FLEECE insulation	HEAT EXCHANGER SURFACE Upper	Lower	ENERGY EFFICIENCY CLASS
	Art. Nr.	[m²]		
800	3138162322208	1,26	2,9	**C**
1000	3138162322209	1,9	3,5	**C**

ACCESSORIES

ELECTRIC IMMERSION HEATERS



Mod.	Heated volume by electric immersion heater [lt]	MONOPHASE **1,5** kW	**2** kW	**3** kW
		5240000000051	5240000000052	5240000000053
		Ignition time from 10 °C to 45 °C with electric immersion heaters [min]		
200	54	88	60	44
300	105	188	141	94
400	167	299	225	150
500	172	307	230	154
800	263	428	321	214
1000	379	618	463	308

"Easy Control" Electronic Display-mounted on tank

ART. NR.	FOR MODELS
5005000310002	WC
5005000310003	WB



Electric immersion heater flange plate

See Accessories section



Titanium electronic anode

See Accessories section



P.E.D. product designed and produced in conformity to the article 4.3 of directive 2014/68/UE - ErP Ecodesgin directive 2009/125/CE

BOLLY® **2 BC**

POLYWARM® COATED DOMESTIC HOT WATER CALORIFIER WITH 2 FIXED HEAT EXCHANGERS AND CONNECTIONS ALIGNED ON THE BACK

	STORAGE		HEAT EXCHANGER	
Model	Pmax	Tmax	Pmax	Tmax
150 ÷ 800	10 bar	90 °C	12 bar	110 °C
1000	8 bar			

CORDIVARI Lab

TÜV Rheinland Energie und Umwelt GmbH states that test procedures and Cordivari LAB are certified conforming to European standard EN 15332, as indicated by Ecodesign ErP Directive.

TESTED ErP

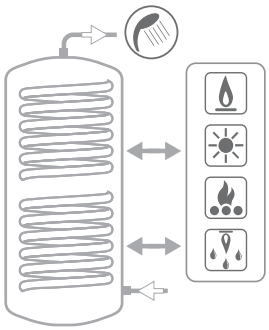

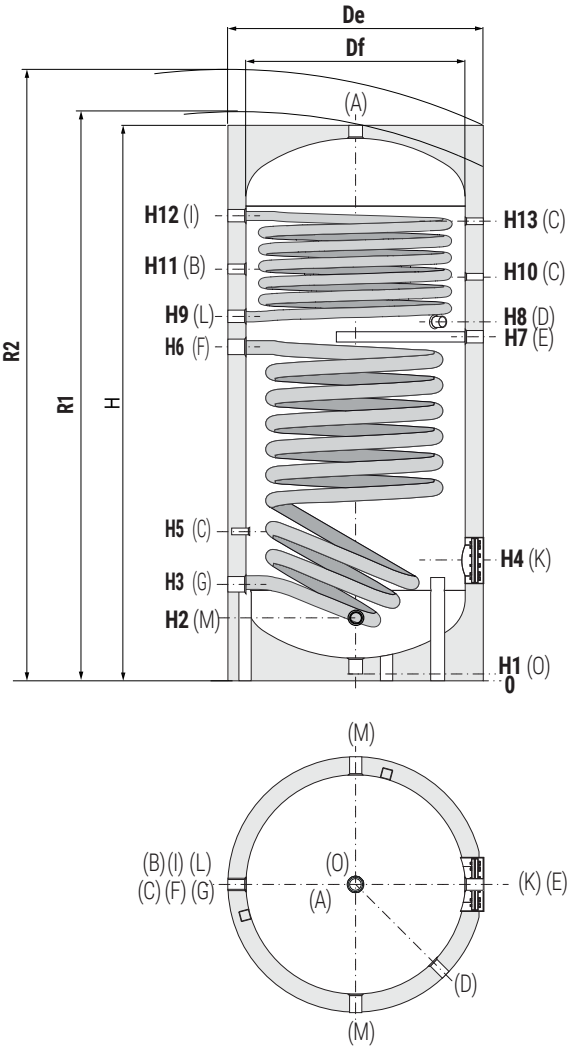

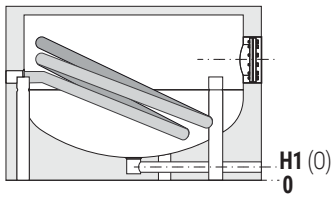

A	Domestic hot water outlet
B	Recirculation
C	Connection for instrumentation 1/2" F
D	Connection for electric immersion heater
E	Connection for magnesium anode 1"1/4 F
F	Primary circuit inlet
G	Primary circuit outlet
I	Upper heat exchanger inlet
K	Blind flange for inspection
L	Upper heat exchanger outlet
M	Domestic cold water circuit inlet
N	Connection for instrumentation 1/2" F
O	Drain 1" 1/4 F. For model 1000 connection 1"1/2 F

BOLLY® 2 BC WSB - HARD FOAM INSULATION

Mod.	Vol.	Weight	DE	H	R2	H1	H2	H3	H4	H5	H6	H7	H8	H9	H10	H11	H12	H13	K	A- M	B	D	F - G - I - L
	[lt]	[kg]	[mm]																	Conn.		F	
200	189	59	550	1430	1530	65	209	269	319	474	859	874	929	968	1024	1084	1199	1189	Øi120/Øe180	1"1/4	3/4"	1"1/2	1"1/4
300	291	73	650	1480	1620	65	240	307	375	495	856	885	945	975	1070	1095	1215	1215	Øi120/Øe180	1"1/4	1"	1"1/2	1"1/4
400	422	104	700	1760	1890	65	250	315	390	530	935	960	1015	1044	1190	1274	1485	1480	Øi120/Øe180	1"1/4	1"	1"1/2	1"1/4
500	498	124	750	1780	1930	65	260	330	405	495	1080	1105	1160	1200	1295	1345	1490	1470	Øi120/Øe180	1"1/4	1"	1"1/2	1"1/4

BOLLY® 2 BC WSC - DISMOUNTABLE SOFT FLEECE INSULATION

Mod.	Vol.	Weight	De	Df	H	R1	R2	H1	H2	H3	H4	H5	H6	H7	H8	H9	H10	H11	H12	H13	K	A M	B	D	F - G - I - L
	[lt]	[kg]	[mm]																			Conn.		F	
800	788	202	970	750	2160	2230	2370	69	338	428	483	618	1304	1323	1398	1443	1588	1632	1808	1788	Øi170/Øe240	1"1/2	1"	2"	1"1/4
1000	1037	239	1070	850	2195	2290	2440	57	354	429	167	285	880	1000	1225	1870	2055	2215	2480	2595	Øi170/Øe240	1"1/2	1"	2"	1"1/4

P.E.D. product designed and produced in conformity to the article 4.3 of directive 2014/68/UE - ErP Ecodesgin directive 2009/125/CE

CORDIVARI

BOLLY® 1 AP - HIGH PERFORMANCES

POLYWARM® COATED DOMESTIC HOT WATER CALORIFIER WITH 1 FIXED HEAT EXCHANGER



APPLICATION
Production and storage of domestic hot water (DHW).
MATERIAL
Mild steel Polywarm® coated (Attestation ACS - SSICA - DVGW - W270 - WRAS)
HEAT EXCHANGER
Mild steel Polywarm® coated heat exchanger.
INSULATION
High thermal insulation with ecological polyurethane hard foam.
Grey PVC external lining.
CATHODE PROTECTION
Magnesium anode.
DRAIN
External confluence through drain connection.
GASKET- FLANGE PLATE
Silicone gaskets suitable for water intended for human consumption (tested according to 98/83/CE), max temperature up to 200°C. Mild steel inspection flange plate with Polywarm®.
WARRANTY
5 years - See general sales conditions and warranty
ACCESSORIES AND SPARE PARTS:
See Accessories section for the entire list.

POLYWARM® COATED DHW STORAGE

POLYWARM® COATED HEAT EXCHANGER

STOCK AVAILABILITY



cordivari.com/erp



On line ErP label tool

BOLLY® 1 AP WB

Model	HARD FOAM insulation Art. Nr.	HEAT EXCHANGER SURFACE [m²]	ENERGY EFFICIENCY CLASS
150	3105162320501	1,1	**B**
200	3105162320502	1,5	**B**
300	3105162320503	1,8	**B**
400	3105162320504	2	**C**
500	3105162320505	2,6	**C**

ACCESSORIES

ELECTRIC IMMERSION HEATERS

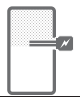

Mod.	Heated volume by electric immersion heater [lt]	MONOPHASE **1,5** kW	MONOPHASE **2** kW	MONOPHASE **3** kW
		5240000000051	5240000000052	5240000000053
		Ignition time from 10 °C to 45 °C with electric immersion heaters [min]		
150	42	76	57	38
200	72	128	96	64
300	113	202	152	101
400	167	299	225	150
500	184	329	247	165

"Easy Control" Electronic Display-mounted on tank

ART. NR.	FOR MODELS
5005000310003	WB



Electric immersion heater flange plate

See Accessories section



Titanium electronic anode

See Accessories section

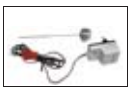

P.E.D. product designed and produced in conformity to the article 4.3 of directive 2014/68/UE - ErP Ecodesgin directive 2009/125/CE

BOLLY® **1 AP - HIGH PERFORMANCES**

POLYWARM® COATED DOMESTIC HOT WATER CALORIFIER WITH 1 FIXED HEAT EXCHANGER

STORAGE		HEAT EXCHANGER	
Pmax	Tmax	Pmax	Tmax
10 bar	90 °C	12 bar	110 °C

CORDIVARI Lab

TÜV Rheinland Energie und Umwelt GmbH states that test procedures and Cordivari LAB are certified conforming to European standard EN 15332, as indicated by Ecodesign ErP Directive.

TESTED ErP

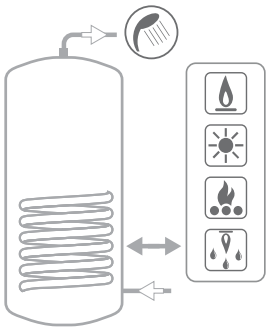

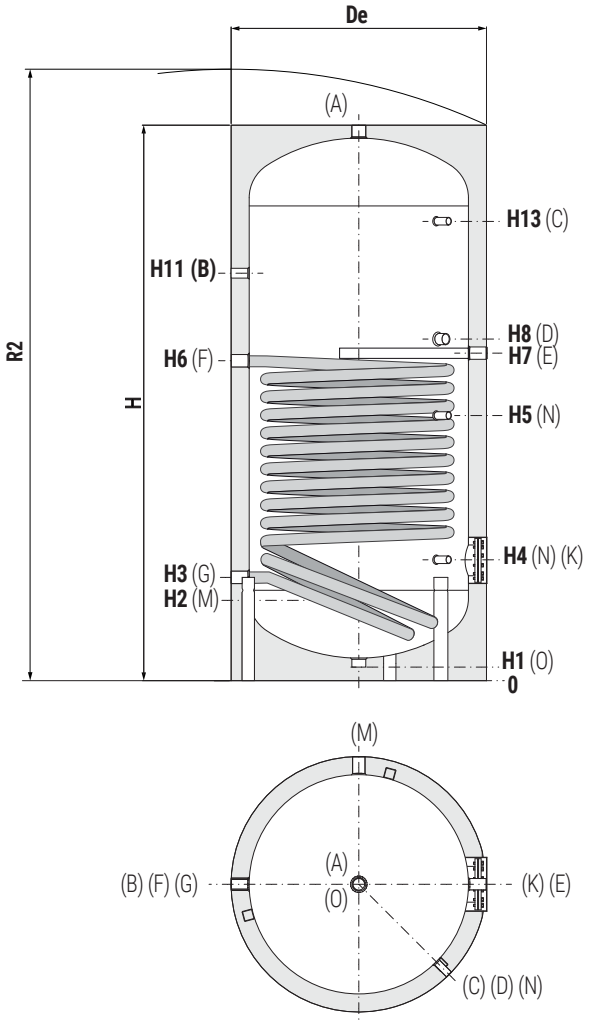

A	Domestic hot water outlet 1"1/4 F
B	Recirculation
C	Connection for instrumentation 1/2" F
D	Connection for electric immersion heater 1"1/2 F
E	Connection for magnesium anode 1"1/4 F
F	Heat exchanger inlet 1"1/4 F
G	Heat exchanger outlet 1"1/4 F
K	Blind flange for inspection Øi120 / Øe180
M	Domestic cold water circuit inlet
N	Connection for instrumentation 1/2" F
O	Drain 1" 1/4 F

Model	Volume	Weight	De	H	R2	H1	H2	H3
	[lt]	[Kg]	[mm]					
150	148	54	500	1414	1500	71	210	275
200	189	63	550	1434	1536	71	220	285
300	291	75	650	1486	1622	71	246	311
400	422	93	700	1766	1900	71	261	326
500	498	118	750	1786	1937	71	271	346

Model	H4	H5	H6	H7	H8	H11	H13	B-M
	[mm]							Connections F
150	315	725	888	956	1011	1065	1185	3/4"
200	325	735	1041	1155	1090	915	1195	3/4"
300	381	671	1020	1136	1071	1146	1221	1"
400	401	886	1116	1166	1236	1386	1486	1"
500	411	896	1135	1174	1142	1346	1476	1"

P.E.D. product designed and produced in conformity to the article 4.3 of directive 2014/68/UE - ErP Ecodesgin directive 2009/125/CE

CORDIVARI

BOLLY® **1 AP**

HEAT EXCHANGERS TECHNICAL DATA



Data have been calculated on following basis:
1) Primary circuit at T1 and proper energy source;
2) Production of DHW in continuous way from 10 °C at t2;
3) DHW that can be taken in the first 10' and in the first hour from storage at 60°C, input 10°C and output 45°C;
4) Sanitary water according to UNI CTI 8065.

LOWER
HEAT EXCHANGER

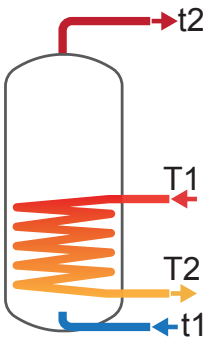

Model	Primary Flow rate	Ignition time (minutes) from 10 °C to t2 and primary at T1				Maximum power exchange (kW) with primary at T1, secondary within 10-45 °C and constant use of DHW production				DHW continuous production lt/h within 10-45 °C and primary at T1			
	[m³/h]	T1/t2				T1				T1			
		55/50	65/60	70/60	80/60	55	65	70	80	55	65	70	80
150	2	56	58	41	27	11,9	17,8	20,7	26,8	294	439	512	662
	1	65	68	48	32	10,8	15,8	18,3	23,4	266	390	452	577
200	2,5	51	53	37	25	16,4	24,4	28,5	36,7	405	603	703	908
	1,25	60	62	44	29	15	21,8	25,2	32,1	369	539	623	795
300	3	65	67	48	31	19,9	29,6	34,5	44,4	490	731	852	1099
	1,5	75	79	56	37	18,2	26,6	30,7	39,1	449	656	759	968
400	3,5	80	83	58	38	22,3	33,2	38,7	49,9	549	820	956	1234
	1,75	92	96	68	45	20,6	30	34,7	44,3	506	741	858	1095
500	3,5	79	82	58	38	28,6	42,3	49,2	63,2	705	1045	1216	1563
	1,75	93	98	69	46	26,2	37,8	43,6	55,2	645	933	1076	1365

Model	Primary Flow rate	DHW produced in the first 10 minutes in lt/10' input 10 °C output 45 °C, storage at t2 and primary at T1				DHW produced in the first hour in lt/60' input 10 °C output 45 °C, storage at t2 and primary at T1				Heat exchanger pressure loss	
	[m³/h]	T1/t2				T1/t2				[mm H_2O]	[mbar]
		55/50	65/60	70/60	80/60	55/50	65/60	70/60	80/60		
150	2	217	283	295	320	403	561	620	740	401,22	39,35
	1	212	275	285	306	381	522	572	672	111,14	10,90
200	2,5	284	371	387	421	540	752	832	996	827,10	81,11
	1,25	278	360	374	403	511	701	768	906	229,11	22,47
300	3	414	538	558	599	725	1001	1097	1295	1391,18	136,43
	1,5	407	525	542	577	692	941	1023	1190	385,37	37,79
400	3,5	573	738	761	807	920	1257	1366	1589	2056,48	201,67
	1,75	565	725	744	784	886	1194	1288	1477	569,66	55,86
500	3,5	686	884	913	971	1132	1546	1683	1960	262,17	2673,43
	1,75	676	866	889	938	1084	1456	1571	1802	72,62	740,56

HEAT EXCHANGERS PRESSURE LOSS

Heat exchangers surface [m²]	
150	1,1
200	1,5
300	1,8
400	2
500	2,6

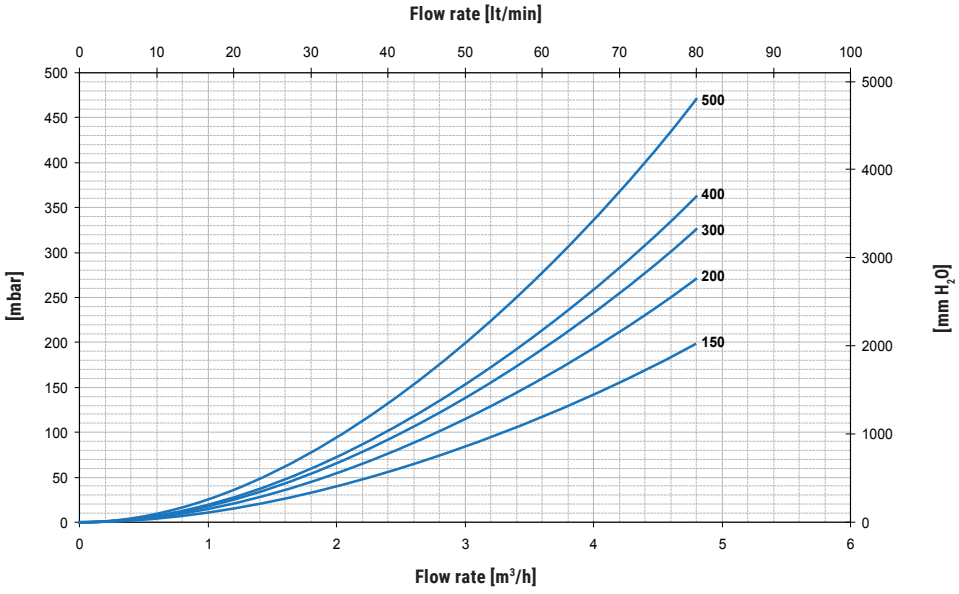

BOLLY® **1 AP**

HEAT EXCHANGERS TECHNICAL DATA



Heat Exchanger output referred to temperature and flow rate of primary circuit and with secondary at 10/45°C at maximum withdrawal of producible DHW (Upper limit of the curves referred to maximum primary flow rate in the heat exchanger, while the lower limit in the curves refer to the minimum primary flow rate)

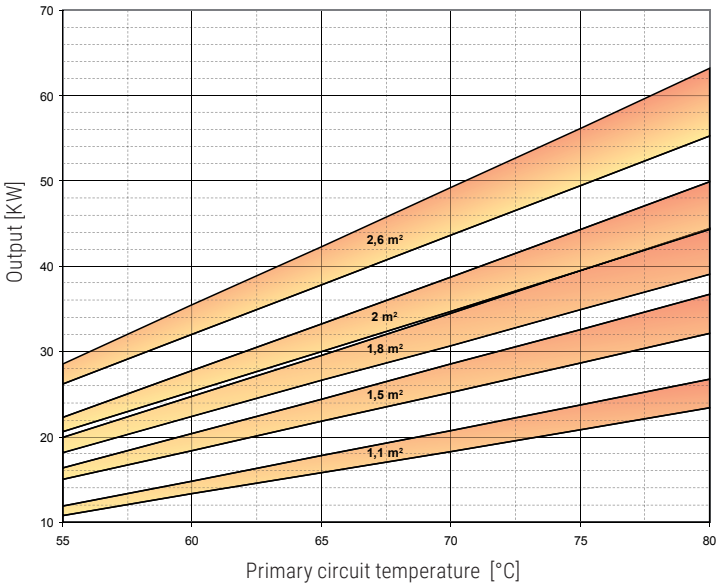

Heat exchanger surface	1,1 m²		1,5 m²		1,8 m²		2 m²		2,6 m²	
	MAX	MIN	MAX	MIN	MAX	MIN	MAX	MIN	MAX	MIN
Flow rate [m³/h]	2	1	2,5	1,25	3	1,5	3,5	1,75	3,5	1,75

EXAMPLE OF INSTALLATION WITH **BOLLY® 1 AP**

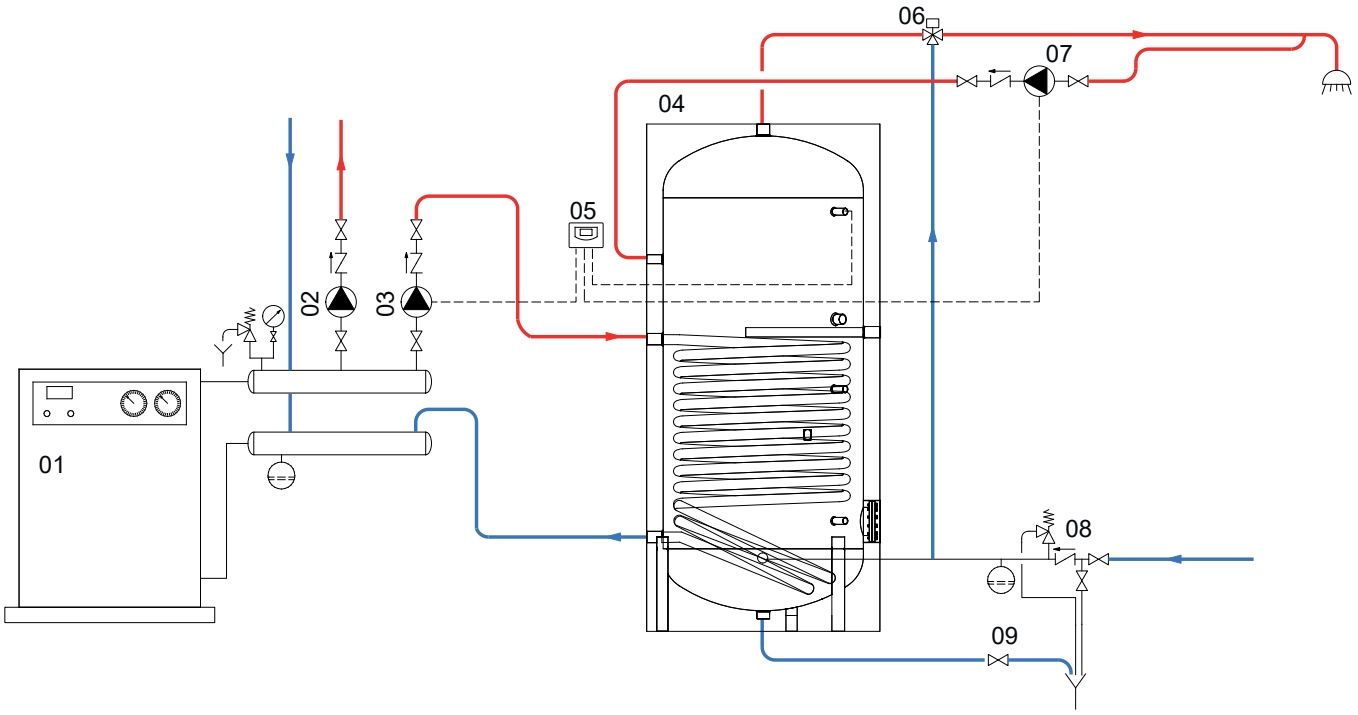

01	Generator	04	Bolly® 1 AP	07	D.H.W. recirculation group
02	Heating system circulation group	05	Easy Control electronic display/thermo-stat	08	Hydraulic safety group
03	D.H.W. circulation group	06	Thermostatic mixing valve	09	Blowdown valve

BOLLY® 2 AP - HIGH PERFORMANCES

POLYWARM® COATED DOMESTIC HOT WATER CALORIFIER WITH 2 FIXED HEAT EXCHANGERS



APPLICATION
Production and storage of domestic hot water (DHW).
MATERIAL
Mild steel Polywarm® coated (Attestation ACS - SSICA - DVGW - W270 - WRAS)
HEAT EXCHANGER
N° 2 mild steel Polywarm® coated heat exchangers.
INSULATION
High thermal insulation with ecological polyurethane hard foam.
Grey PVC external lining.
CATHODE PROTECTION
Magnesium anode.
DRAIN
External confluence through drain connection.
GASKET- FLANGE PLATE
Silicone gaskets suitable for water intended for human consumption (tested according to 98/83/CE), max temperature up to 200°C. Mild steel inspection flange plate with Polywarm®.
WARRANTY
5 years - See general sales conditions and warranty
ACCESSORIES AND SPARE PARTS
See Accessories section for the entire list.

POLYWARM® COATED DHW STORAGE

POLYWARM® COATED HEAT EXCHANGER

STOCK AVAILABILITY



cordivari.com/erp



On line ErP label tool

BOLLY® 2 AP WB

Model	HARD FOAM insulation	HEAT EXCHANGER SURFACE Upper	Lower	ENERGY EFFICIENCY CLASS
	Art. Nr.	[m²]		
200	3135162325102	0,4	1,4	**B**
300	3135162320503	0,9	1,4	**B**
500	3135162320505	1,3	2	**C**

ACCESSORIES

ELECTRIC IMMERSION HEATERS

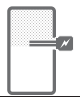

Mod.	Heated volume by electric immersion heater [lt]	MONOPHASE **1,5** kW	**2** kW	**3** kW
		5240000000051	5240000000052	5240000000053
		Ignition time from 10 °C to 45 °C with electric immersion heaters [min]		
200	54	88	60	44
300	105	188	141	94
500	172	307	230	154

"Easy Control" Electronic Display-mounted on tank

ART. NR.	FOR MODELS
5005000310003	WB



Electric immersion heater flange plate

See Accessories section



Titanium electronic anode

Art. Nr.	Model
5200000000008	200, 300
5200000000009	500



P.E.D. product designed and produced in conformity to the article 4.3 of directive 2014/68/UE - ErP Ecodesgin directive 2009/125/CE

BOLLY® **2 AP - HIGH PERFORMANCES**

POLYWARM® COATED DOMESTIC HOT WATER CALORIFIER WITH 2 FIXED HEAT EXCHANGERS

STORAGE		HEAT EXCHANGER	
Pmax	Tmax	Pmax	Tmax
10 bar	90 °C	12 bar	110 °C

CORDIVARI Lab

TÜV Rheinland Energie und Umwelt GmbH states that test procedures and Cordivari LAB are certified conforming to European standard EN 15332, as indicated by Ecodesign ErP Directive.

TESTED ErP

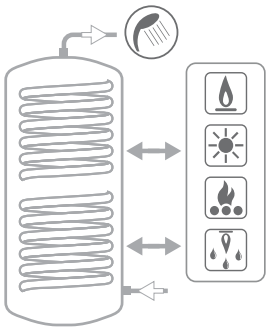

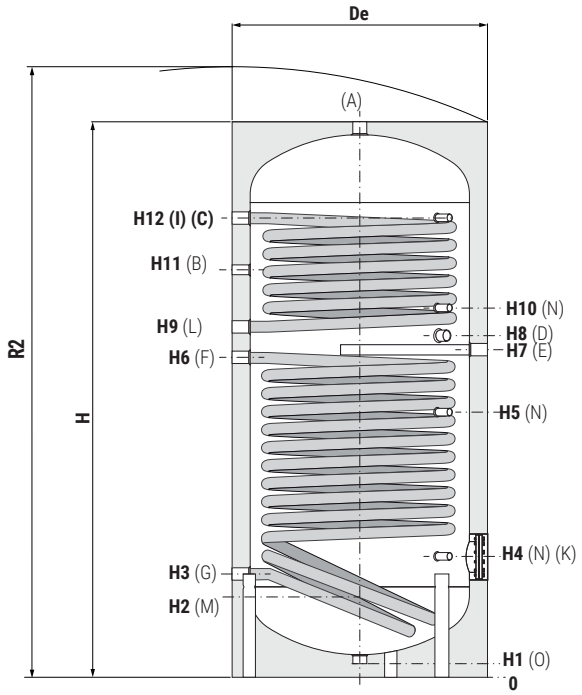

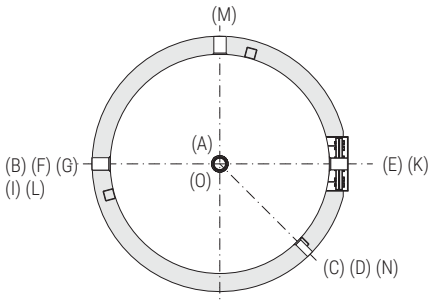

A	Domestic hot water outlet 1"1/4 F
B	Recirculation
C	Connection for instrumentation 1/2" F
D	Connection for electric immersion heater 1"1/2 F
E	Connection for magnesium anode 1"1/4 F
F	Lower heat exchanger inlet 1"1/4 F
G	Lower heat exchanger outlet 1"1/4 F
I	Upper heat exchanger inlet 1"1/4 F
L	Upper heat exchanger outlet 1"1/4 F
K	Blind flange for inspection Øi120 / Øe180
M	Domestic cold water circuit inlet
N	Connection for instrumentation 1/2" F
O	Drain 1" 1/4 F
14	Connection for instrumentation 1/2" F
16	Domestic hot water outlet 1"1/4 F

Model	Volume	Weight	De	H	R2	H1	H2	H3
	[lt]	[Kg]	[mm]					
200	189	67	550	1434	1536	71	220	285
300	291	82	650	1486	1622	71	246	311
500	498	131	750	1786	1937	71	271	346

Model	H4	H5	H6	H7	H8	H9	H10	H11	H12	B-M
	[mm]									
200	325	745	760	955	995	1015	1105	1115	1205	3/4"
300	381	671	832	871	931	981	1076	1101	1221	1"
500	411	896	1036	1076	1144	1186	1296	1331	1476	1"

P.E.D. product designed and produced in conformity to the article 4.3 of directive 2014/68/UE - ErP Ecodesgin directive 2009/125/CE

CORDIVARI

BOLLY® **2 AP**

HEAT EXCHANGERS TECHNICAL DATA



Data have been calculated on following basis:
1) Primary circuit at T1 and proper energy source;
2) Production of DHW in continuous way from 10 °C at t2;
3) DHW that can be taken in the first 10' and in the first hour from storage at 60°C, input 10°C and output 45°C;
4) Sanitary water according to UNI CTI 8065.

UPPER HEAT EXCHANGER

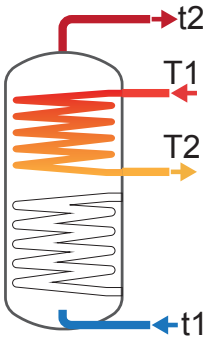

Model	Primary Flow rate	Ignition time (minutes) from 10 °C to t2 and primary at T1				Maximum power exchange (kW) with primary at T1, secondary within 10-45 °C and constant use of DHW production				DHW continuous production lt/h within 10-45 °C and primary at T1			
	[m³/h]	T1/t2				T1				T1			
		55/50	65/60	70/60	80/60	55	65	70	80	55	65	70	80
300	3	41	43	30	20	9,9	15	17,5	22,8	243	368	432	562
	1,5	47	48	34	22	9,1	13,6	15,8	20,4	223	333	389	503
500	3,5	49	51	35	23	14,4	22,5	25,9	32,8	353	532	623	809
	1,75	55	57	40	26	13,3	19,6	22,8	29,3	326	482	562	724

Model	Primary Flow rate	DHW produced in the first 10 minutes in lt/10' input 10 °C output 45 °C, storage at t2 and primary at T1				DHW produced in the first hour in lt/60' input 10 °C output 45 °C, storage at t2 and primary at T1				Heat exchanger pressure loss	
	[m³/h]	T1/t2				T1/t2				[mm H_2O]	[mbar]
		55/50	65/60	70/60	80/60	55/50	65/60	70/60	80/60		
300	3	397	512	528	561	640	877	954	1113	1082,03	106,11
	1,5	392	503	517	545	616	833	901	1038	299,73	29,39
500	3,5	660	847	869	916	1007	1366	1475	1697	2056,48	201,67
	1,75	652	834	853	893	973	1303	1396	1586	569,66	55,86

LOWER HEAT EXCHANGER

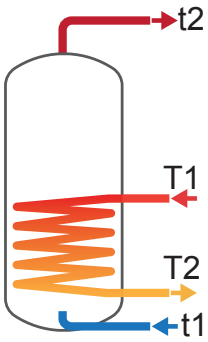

Model	Primary Flow rate	Ignition time (minutes) from 10 °C to t2 and primary at T1				Maximum power exchange (kW) with primary at T1, secondary within 10-45 °C and constant use of DHW production				DHW continuous production lt/h within 10-45 °C and primary at T1			
	[m³/h]	T1/t2				T1				T1			
		55/50	65/60	70/60	80/60	55	65	70	80	55	65	70	80
300	3	82	85	60	39	15,6	23,4	27,3	36,3	384	576	673	871
	1,5	94	98	69	45	14,6	21,2	24,6	31,6	354	522	607	778
500	3,5	100	104	73	48	22,3	33,2	38,7	49,9	549	820	956	1234
	1,75	115	120	85	56	20,6	30	34,7	44,3	506	741	858	1095

Model	Primary Flow rate	DHW produced in the first 10 minutes in lt/10' input 10 °C output 45 °C, storage at t2 and primary at T1				DHW produced in the first hour in lt/60' input 10 °C output 45 °C, storage at t2 and primary at T1				Heat exchanger pressure loss	
	[m³/h]	T1/t2				T1/t2				[mm H_2O]	[mbar]
		55/50	65/60	70/60	80/60	55/50	65/60	70/60	80/60		
300	3	397	512	528	561	640	877	954	1113	1082,03	106,11
	1,5	392	503	517	545	616	833	901	1038	299,73	29,39
500	3,5	660	847	869	916	1007	1366	1475	1697	2056,48	201,67
	1,75	652	834	853	893	973	1303	1396	1586	569,66	55,86

HEAT EXCHANGERS PRESSURE LOSS

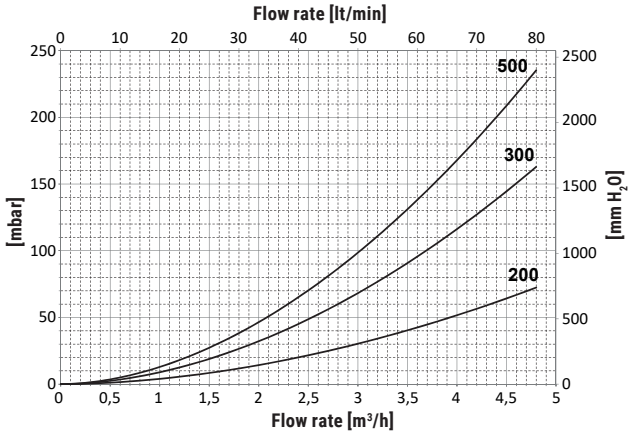

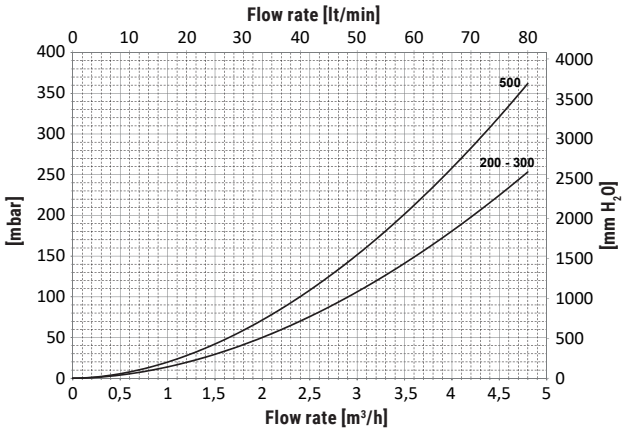

UPPER

Heat exchangers surface [m²]	
200	0,4
300	0,9
500	1,3

LOWER

Heat exchangers surface [m²]	
200	1,4
300	1,4
500	2

BOLLY® **2 AP**

HEAT EXCHANGERS TECHNICAL DATA



Heat Exchanger output referred to temperature and flow rate of primary circuit and with secondary at 10/45°C at maximum withdrawal of producible DHW (Upper limit of the curves referred to maximum primary flow rate in the heat exchanger, while the lower limit in the curves refer to the minimum primary flow rate)

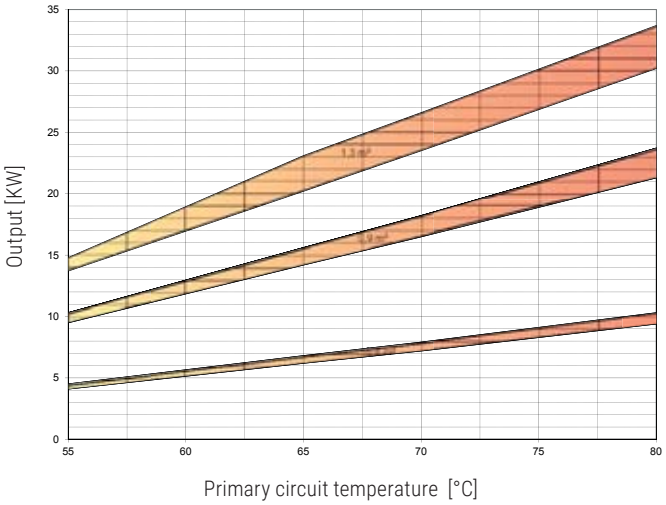

Heat exchanger surface	0,4 m²		0,9 m²		1,3 m²	
Flow rate [m³/h]	MAX	MIN	MAX	MIN	MAX	MIN
	2	1	3	1,5	3,5	1,75

UPPER HEAT EXCHANGERS

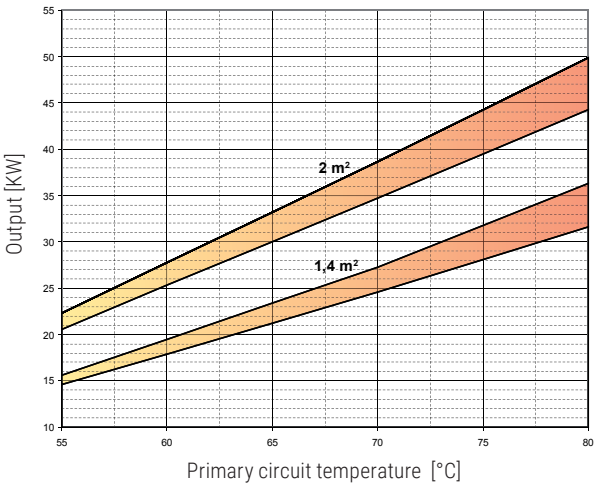

Heat exchanger surface	1,4 m²		2 m²	
Flow rate [m³/h]	MAX	MIN	MAX	MIN
	3	1,5	3,5	1,75

LOWER HEAT EXCHANGERS

EXAMPLE OF INSTALLATION WITH **BOLLY® 2 AP**

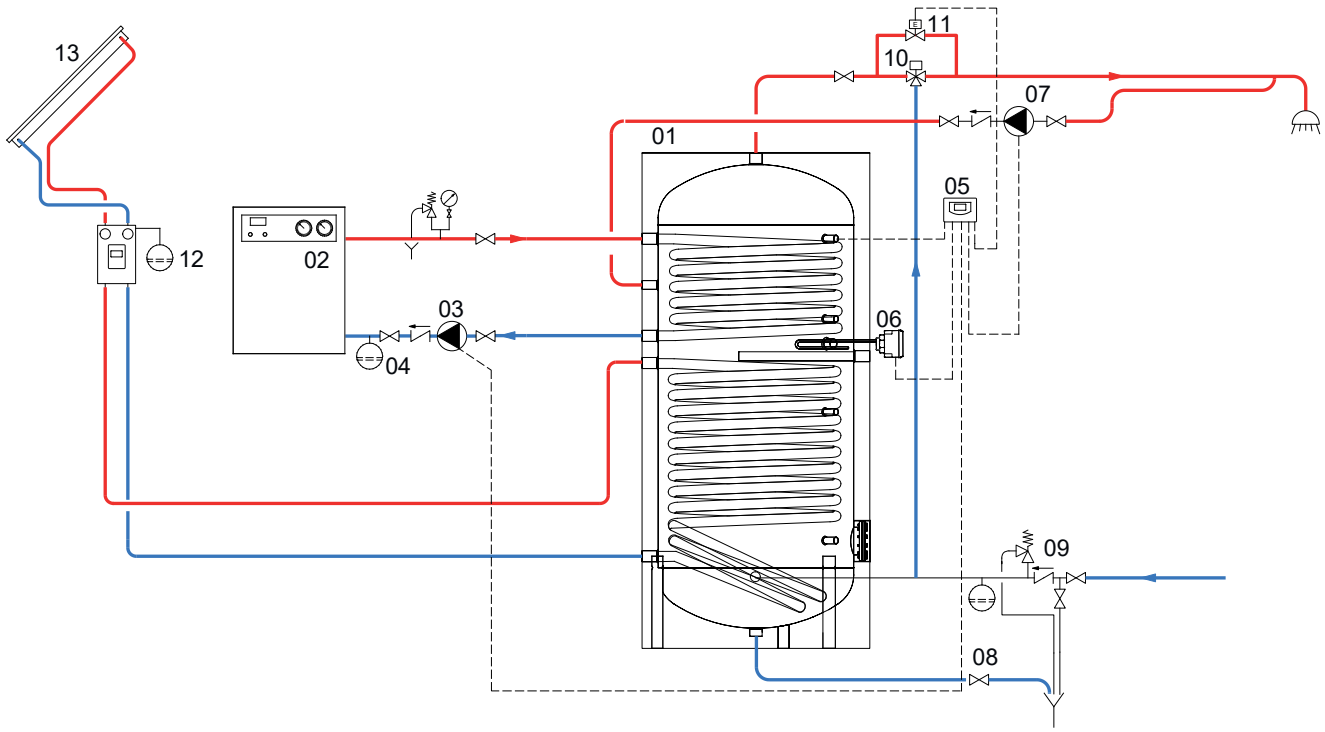

1	Bolly® 2 AP	5	Easy Control electronic display/ thermostat	9	Hydraulic safety group	13	Solar panels
2	generator	6	Electric immersion heater (optional)	10	Thermostatic mixing valve		
3	Circulation group	7	D.H.W. recirculation group	11	By-pass solenoid valve		
4	Expansion vessel	8	Blowdown valve	12	Solar system circulation group		

BOLLY® **1 SLIM CLASSE A**

POLYWARM® COATED DOMESTIC HOT WATER CALORIFIER WITH 1 FIXED HEAT EXCHANGER



APPLICATION
Production and storage of domestic hot water (DHW).
MATERIAL
Mild steel Polywarm® coated (Attestation ACS - SSICA - DVGW - W270 - WRAS)
HEAT EXCHANGER
Mild steel Polywarm® coated heat exchanger.
INSULATION
Fixed polyurethane foam with high thermal insulation with a sheet of highly insulating vacuum material.
Grey PVC external lining.
CATHODE PROTECTION
Magnesium anode.
DRAIN
External confluence through drain connection.
GASKET- FLANGE PLATE
Silicone gaskets suitable for water intended for human consumption (tested according to 98/83/CE), max temperature up to 200°C. Mild steel inspection flange plate with Polywarm®.
WARRANTY
5 years - See general sales conditions and warranty
ACCESSORIES AND SPARE PARTS
See Accessories section for the entire list.





cordivari.com/erp



On line ErP label tool

BOLLY® 1 SLIM CLASSE A

Model	HARD FOAM insulation Art. Nr.	HEAT EXCHANGER SURFACE [m²]	ENERGY EFFICIENCY CLASS
200	3105162321114	1,42	**A**
300	3105162321115	1,6	**A**
500	3105162321116	2,63	**A**



ACCESSORIES

ELECTRIC IMMERSION HEATERS

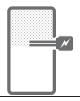

Mod.	Heated volume by electric immersion heater [lt]	MONOPHASE **1,5** kW	**2** kW	**3** kW
		5240000000051	5240000000052	5240000000053
		Ignition time from 10 °C to 45 °C with electric immersion heaters [min]		
200	72	128	96	64
300	113	202	152	101
500	184	329	247	165

"Easy Control" Electronic Display-mounted on tank

ART. NR.	FOR MODELS
5005000310003	WB



Thermometer

Art. Nr.
5032240000107
5 units box



Titanium electronic anode

See Accessories section

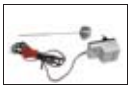

P.E.D. product designed and produced in conformity to the article 4.3 of directive 2014/68/UE - ErP Ecodesgin directive 2009/125/CE

BOLLY® **1 SLIM CLASSE A**

POLYWARM® COATED DOMESTIC HOT WATER CALORIFIER WITH 1 FIXED HEAT EXCHANGER

STORAGE		HEAT EXCHANGER	
Pmax	Tmax	Pmax	Tmax
10 bar	90 °C	12 bar	110 °C

CORDIVARI Lab

TÜV Rheinland Energie und Umwelt GmbH states that test procedures and Cordivari LAB are certified conforming to European standard EN 15332, as indicated by Ecodesign ErP Directive.

TESTED ErP

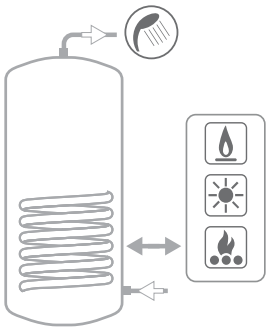

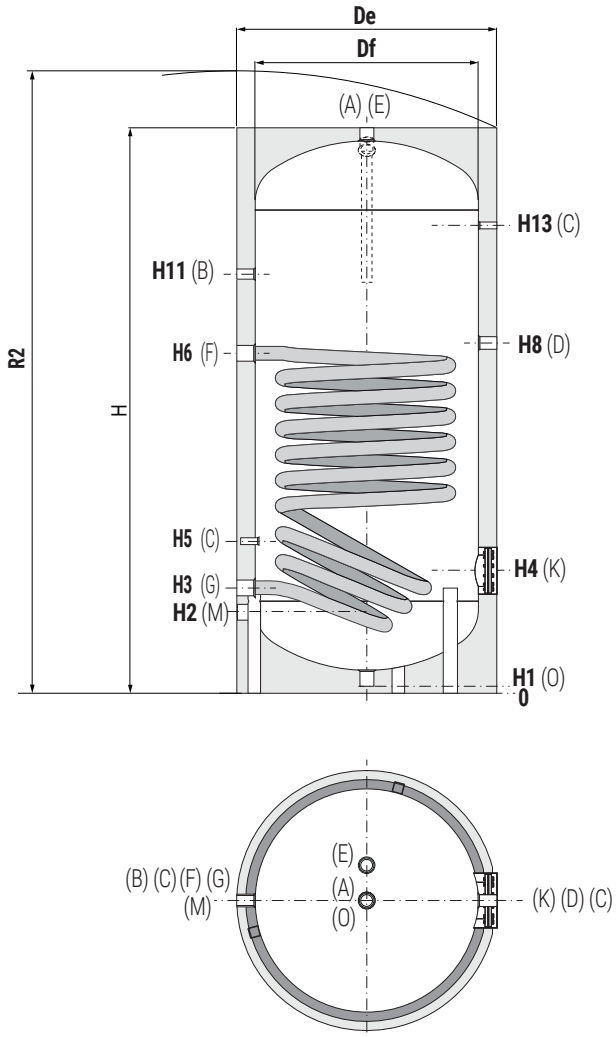

A	Domestic hot water outlet 1"1/4 F
B	Recirculation
C	Connection for instrumentation 1/2" F
D	Connection for electric immersion heater 1"1/2 F
E	Connection for magnesium anode 1"1/4 F
F	Primary circuit inlet 1"1/4 F
G	Primary circuit outlet 1"1/4 F
K	Blind flange for inspection
M	Domestic cold water circuit inlet 1"1/4 F
N	Connection for instrumentation 1/2" F
O	Drain 1"1/4 F

Model	Volume	Weight	De	H	R2	H1	H2	H3	H4	H5	H6	H8	H11	H13	K	B
	[lt]	[Kg]	[mm]													Conn. F
200	189	55	550	1430	1540	65	209	314	319	474	952	1039	1084	1189	Øi120/Øe180	3/4"
300	291	65	650	1480	1625	65	240	358	375	473	907	1005	1095	1215	Øi120/Øe180	1"
500	498	112	750	1830	1930	65	260	368	405	495	1118	1190	1345	1470	Øi120/Øe180	1"

P.E.D. product designed and produced in conformity to the article 4.3 of directive 2014/68/UE - ErP Ecodesgin directive 2009/125/CE

CORDIVARI

BOLLY® **2 SLIM CLASSE A**

POLYWARM® COATED DOMESTIC HOT WATER CALORIFIER WITH 2 FIXED HEAT EXCHANGERS



APPLICATION
Production and storage of domestic hot water (DHW).
MATERIAL
Mild steel Polywarm® coated (Attestation ACS - SSICA - DVGW - W270 - WRAS)
HEAT EXCHANGER
N° 2 mild steel Polywarm® coated heat exchangers.
INSULATION
Fixed polyurethane foam with high thermal insulation with a sheet of highly insulating vacuum material.
Grey PVC external lining.
CATHODE PROTECTION
Magnesium anode.
DRAIN
External confluence through drain connection.
GASKET- FLANGE PLATE
Silicone gaskets suitable for water intended for human consumption (tested according to 98/83/CE), max temperature up to 200°C. Mild steel inspection flange plate with Polywarm®.
WARRANTY
5 years - See general sales conditions and warranty
ACCESSORIES AND SPARE PARTS
See Accessories section for the entire list.



POLYWARM® COATED DHW STORAGE

POLYWARM® COATED HEAT EXCHANGER





On line ErP label tool

BOLLY® 2 SLIM CLASSE A

Model	HARD FOAM insulation	HEAT EXCHANGER SURFACE Upper	HEAT EXCHANGER SURFACE Lower	ENERGY EFFICIENCY CLASS
	Art. Nr.	[m²]		
200	3135162321216	0,41	1,25	**A**
300	3135162321217	0,67	1,41	**A**
500	3135162321218	0,99	2,63	**A**



ACCESSORIES

ELECTRIC IMMERSION HEATERS

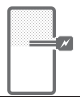

Mod.	Heated volume by electric immersion heater [lt]	MONOPHASE **1,5** kW	MONOPHASE **2** kW	MONOPHASE **3** kW
		5240000000051	5240000000052	5240000000053
		Ignition time from 10 °C to 45 °C with electric immersion heaters [min]		
200	72	128	96	64
300	113	202	152	101
500	184	329	247	165

"Easy Control" Electronic Display-mounted on tank

ART. NR.	FOR MODELS
5005000310002	WB



Thermometer

Art. Nr.
5032240000107
5 units box



Titanium electronic anode

See Accessories section



P.E.D. product designed and produced in conformity to the article 4.3 of directive 2014/68/UE - ErP Ecodesgin directive 2009/125/CE

BOLLY® **2 SLIM CLASSE A**

POLYWARM® COATED DOMESTIC HOT WATER CALORIFIER WITH 2 FIXED HEAT EXCHANGERS

STORAGE		HEAT EXCHANGER	
Pmax	Tmax	Pmax	Tmax
10 bar	90 °C	12 bar	110 °C

CORDIVARI Lab

TÜV Rheinland Energie und Umwelt GmbH states that test procedures and Cordivari LAB are certified conforming to European standard EN 15332, as indicated by Ecodesign ErP Directive.

TESTED ErP

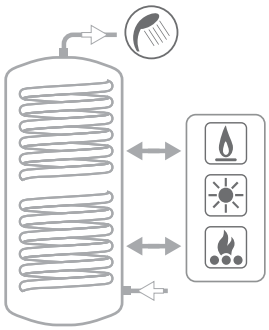

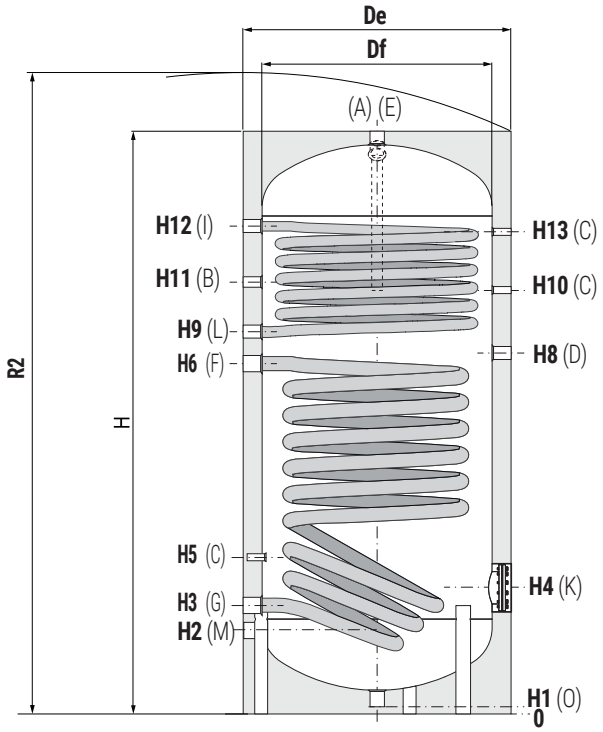

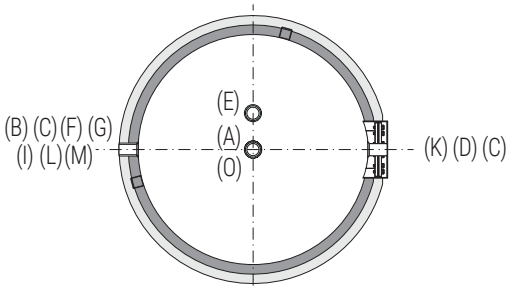

A	Domestic hot water outlet 1"1/4 F
B	Recirculation
C	Connection for instrumentation 1/2" F
D	Connection for electric immersion heater 1"1/2 F
E	Connection for magnesium anode 1"1/4 F
F	Primary circuit inlet 1"1/4 F
G	Primary circuit outlet 1"1/4 F
I	Upper heat exchanger inlet 1"1/4 F
K	Blind flange for inspection
L	Upper heat exchanger outlet 1"1/4 F
M	Domestic cold water circuit inlet 1"1/4 F
N	Connection for instrumentation 1/2" F
O	Drain 1"1/4 F

Model	Volume netto	Weight	De	H	R2	H1	H2	H3	H4	H5	H6	H8	H9	H10	H11	H12	H13	K	B
	[lt]	[Kg]	[mm]																Conn. F
200	189	59	550	1430	1540	65	209	269	319	474	859	929	968	1024	1084	1199	1189	Øi120/Øe180	3/4"
300	291	73	650	1480	1625	65	240	307	375	495	856	945	975	1070	1095	1215	1215	Øi120/Øe180	1"
500	498	124	750	1830	1930	65	260	330	405	495	1080	1160	1200	1295	1345	1490	1470	Øi120/Øe180	1"

P.E.D. product designed and produced in conformity to the article 4.3 of directive 2014/68/UE - ErP Ecodesgin directive 2009/125/CE

BOLLY® **1 XL**

POLYWARM® COATED DOMESTIC HOT WATER CALORIFIER WITH 1 FIXED HEAT EXCHANGER



APPLICATION
Production and storage of domestic hot water (DHW).
MATERIAL
Mild steel Polywarm® coated (Attestation ACS - SSICA - DVGW - W270 - WRAS)
HEAT EXCHANGER
Mild steel Polywarm® coated heat exchangers.
INSULATION
High thermal insulation with ecological polyurethane hard foam.
Grey PVC external lining.
CATHODE PROTECTION
Magnesium anode.
DRAIN
External confluence through drain connection.
GASKET- FLANGE PLATE
Silicone gaskets suitable for water intended for human consumption (tested according to 98/83/CE), max temperature up to 200°C. Mild steel inspection flange plate with Polywarm® treatment and connection for electric immersion heater.
WARRANTY
5 years - See general sales conditions and warranty
ACCESSORIES AND SPARE PARTS
See Accessories section for the entire list.

POLYWARM® COATED DHW STORAGE

POLYWARM® COATED HEAT EXCHANGER

STOCK AVAILABILITY



cordivari.com/erp



On line ErP label tool



BOLLY® 1 XL WB

Model	HARD FOAM insulation Art. Nr.	HEAT EXCHANGER SURFACE [m²]	ENERGY EFFICIENCY CLASS ErP
200	3105162320702	2	**B**
300	3105162320703	3,4	**B**
400	3105162320706	4,4	**C**
500	3105162320705	5,4	**C**
800	3105162320710	6,0	**B**
1000	3105162320711	6,5	**B**



BOLLY® 1 XL WC

Model	DISMOUNTABLE SOFT FLEECE insulation Art. Nr.	HEAT EXCHANGER SURFACE [m²]	ENERGY EFFICIENCY CLASS ErP
800	3103162321158	6,0	**C**
1000	3103162321159	6,5	**C**

For technical data and performance charts see CALORIFIERS FOR HEAT PUMPS section

ACCESSORIES

ELECTRIC IMMERSION HEATERS

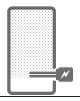

Mod.	Heated volume by electric immersion heater [lt]	MONOPHASE 1,5 kW	2 kW	3 kW
		5240000000051	5240000000052	5240000000053
		Ignition time from 10 °C to 45 °C with electric immersion heaters [min]		
200	166	298	223	149
300	245	439	329	219
400	354	634	476	317
500	424	759	569	380
800	607	989	742	495
1000	783	1275	956	638

"Easy Control" Electronic Display-mounted on tank

ART. NR.	FOR MODELS
5005000310002	WC
5005000310003	WB



Thermometer

Art. Nr.
5032240000107
5 units box



Titanium electronic anode

See Accessories section

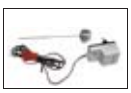

P.E.D. product designed and produced in conformity to the article 4.3 of directive 2014/68/UE - ErP Ecodesgin directive 2009/125/CE

BOLLY® **1 XL**

POLYWARM® COATED DOMESTIC HOT WATER CALORIFIER WITH 1 FIXED HEAT EXCHANGER

STORAGE		HEAT EXCHANGER	
Pmax	Tmax	Pmax	Tmax
10 bar	90 °C	12 bar	110 °C

CORDIVARI Lab

TÜV Rheinland Energie und Umwelt GmbH states that test procedures and Cordivari LAB are certified conforming to European standard EN 15332, as indicated by Ecodesign ErP Directive.

TESTED ErP

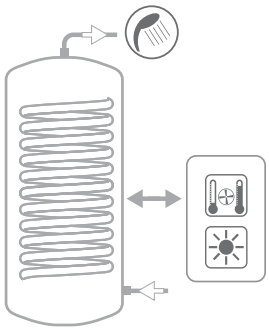

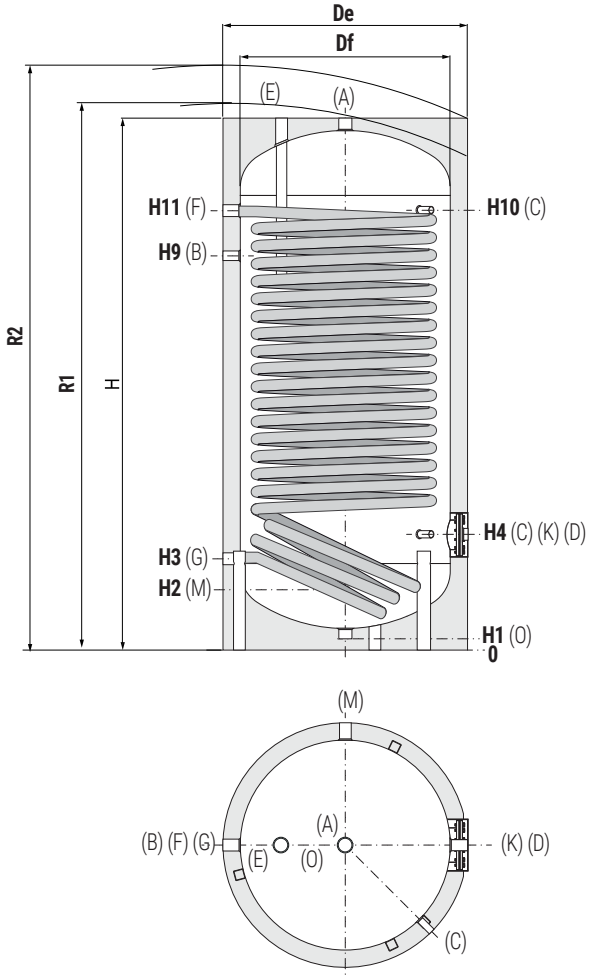

A	Domestic hot water outlet
B	Recirculation
C	Connection for instrumentation 1/2" F
D	Connection for electric immersion heater
E	Connection for magnesium anode 1"1/4 F
F	Primary circuit inlet 1"1/4 F
G	Primary circuit outlet 1"1/4 F
K	Blind flange for inspection
M	Domestic cold water circuit inlet
N	Connection for instrumentation 1/2" F
O	Drain 1"1/4 F, for models > 800 Lt 3/4" F

BOLLY® 1 XL WB - HARD FOAM INSULATION

Model	Volume	De	H	R2	H1	H2	H3	H4	H9	H10	H11	K	M	B	A	D
	[lt]	[mm]											Connections F			
200	189	550	1440	1560	71	220	285	325	1055	1190	1190	Øi120/Øe180	3/4"	3/4"	1"1/4	1"1/2
300	291	650	1500	1650	71	246	321	381	1091	1211	1211	Øi120/Øe180	1"	1"	1"1/4	1"1/2
400	422	700	1766	1910	71	261	321	396	1316	1471	1471	Øi120/Øe180	1"	1"	1"1/4	1"1/5
500	498	750	1800	1960	71	271	346	411	1326	1486	1486	Øi120/Øe180	1"	1"	1"1/4	1"1/2
800	789	900	2180	2370	107	344	424	489	1604	1794	1814	Øi170/Øe240	1"	1"	1"1/4	2"
1000	1038	1000	2230	2460	95	365	445	505	1590	1825	1536	Øi170/Øe240	1"1/4	1"	1"1/2	2"

BOLLY® 1 XL WC - DISMOUNTABLE SOFT FLEECE INSULATION

Model	Volume	Df	De	H	R1	R2	H1	H2	H3	H4	H9	H10	H11	K	M	B	A	D
	[lt]	[mm]													Connections F			
800	789	750	970	2180	2210	2400	107	344	424	489	1604	1794	1814	Øi170/Øe240	1"	1"	1"1/4	2"
1000	1038	850	1070	2230	2265	2480	95	365	445	505	1590	1825	1536	Øi170/Øe240	1"1/4	1"	1"1/2	2"

P.E.D. product designed and produced in conformity to the article 4.3 of directive 2014/68/UE - ErP Ecodesgin directive 2009/125/CE

BOLLY® **2 XL**

POLYWARM® COATED DOMESTIC HOT WATER CALORIFIER WITH 2 FIXED HEAT EXCHANGERS



APPLICATION
Production and storage of domestic hot water (DHW).
MATERIAL
Mild steel Polywarm® coated (Attestation ACS - SSICA - DVGW - W270 - WRAS)
HEAT EXCHANGER
N° 2 mild steel Polywarm® coated heat exchangers.
INSULATION
High thermal insulation with ecological polyurethane hard foam.
Grey PVC external lining.
CATHODE PROTECTION
Magnesium anode.
DRAIN
External confluence through drain connection.
GASKET- FLANGE PLATE
Silicone gaskets suitable for water intended for human consumption (tested according to 98/83/CE), max temperature up to 200°C. Mild steel inspection flange plate with Polywarm®.
WARRANTY
5 years - See general sales conditions and warranty
ACCESSORIES AND SPARE PARTS
See Accessories section for the entire list.

POLYWARM® COATED DHW STORAGE

POLYWARM® COATED HEAT EXCHANGER



cordivari.com/erp

On line ErP label tool

BOLLY® 2 XL WB

Model	HARD FOAM insulation	HEAT EXCHANGER SURFACE Upper	Lower	ENERGY EFFICIENCY CLASS
	Art. Nr.	[m²]		
200	3135162320510	1,4	0,4	**B**
300	3135162320511	1,9	0,9	**B**
500	3135162320512	3,1	1,4	**C**

For technical data and performance charts see CALORIFIERS FOR HEAT PUMPS section

ACCESSORIES

ELECTRIC IMMERSION HEATERS

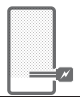

Mod.	Heated volume by electric immersion heater [lt]	MONOPHASE **1,5** kW	**2** kW	**3** kW
		5240000000051	5240000000052	5240000000053
		Ignition time from 10 °C to 45 °C with electric immersion heaters [min]		
200	127	207	155	104
300	173	281	211	140
500	313	509	382	255

"Easy Control" Electronic Display-mounted on tank

ART. NR.	FOR MODELS
5005000310003	WB



Electric immersion heater flange plate

See Accessories section



Titanium electronic anode

Art. Nr.	Model
5200000000008	200, 300
5200000000009	500



P.E.D. product designed and produced in conformity to the article 4.3 of directive 2014/68/UE - ErP Ecodesgin directive 2009/125/CE

BOLLY® **2 XL**

POLYWARM® COATED DOMESTIC HOT WATER CALORIFIER WITH 2 FIXED HEAT EXCHANGERS

STORAGE		HEAT EXCHANGER	
Pmax	Tmax	Pmax	Tmax
10 bar	90 °C	12 bar	110 °C

CORDIVARI Lab

TÜV Rheinland Energie und Umwelt GmbH states that test procedures and Cordivari LAB are certified conforming to European standard EN 15332, as indicated by Ecodesign ErP Directive.

TESTED ErP

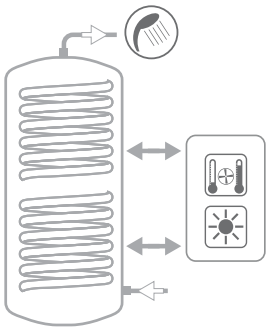

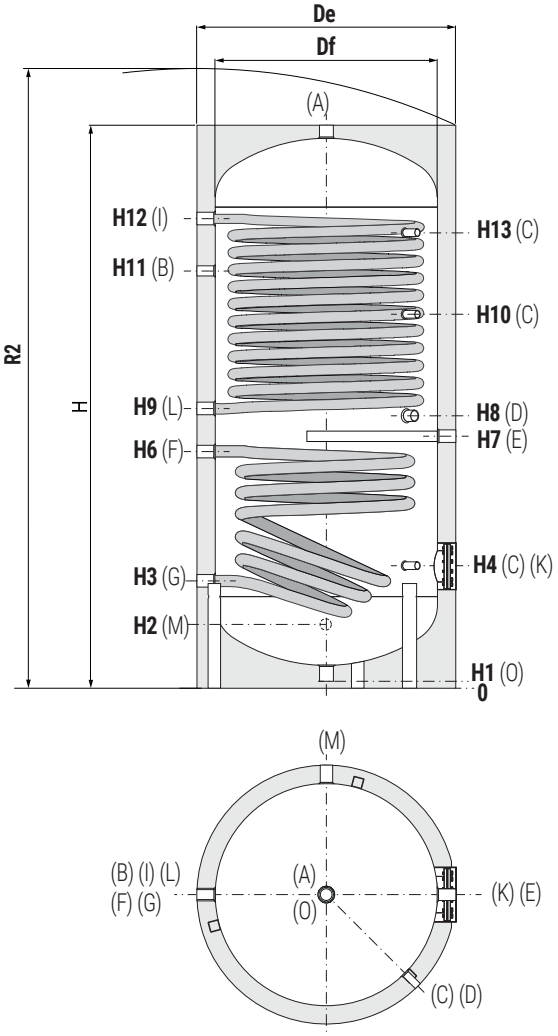

A	Domestic hot water outlet
B	Recirculation
C	Connection for instrumentation 1/2" F
D	Connection for electric immersion heater
E	Connection for magnesium anode 1"1/4 F
F	Lower heat exchanger inlet 1"1/4 F
G	Lower heat exchanger outlet 1"1/4 F
I	Upper heat exchanger inlet 1"1/4 F
J	Connection for 2nd magnesium anode 1"1/4 F (only for models >500)
K	Blind flange for inspection
L	Upper heat exchanger outlet 1"1/4 F
M	Domestic cold water circuit inlet
N	Connection for instrumentation 1/2" F
O	Drain 1" 1/4 F. For models 800 and 1000 connection 3/4" F. For models > 1000 connection 1"" F "

Model	Volume	Weight	DE	H	R2	H1	H2	H3	H4	H6	H7	H8	H9	H10
	[lt]	[Kg]	[mm]											
200	189	65	550	1440	1540	65	220	285	325	475	500	535	570	1105
300	291	83	650	1486	1620	65	246	311	381	596	616	651	686	1076
500	498	134	750	1786	1940	65	271	346	411	671	691	726	761	1296

Model	H11	H12	H13	K	O	M	D	B	A
	[mm]								
200	1089	1200	1195	Øi120/Øe180	1"1/4	3/4"	1"1/2	3/4"	1"1/4
300	1090	1226	1196	Øi120/Øe180	1"1/4	1"	1"1/2	1"	1"1/4
500	1091	1473	1197	Øi120/Øe180	1"1/4	1"	1"1/2	1"	1"1/4

P.E.D. product designed and produced in conformity to the article 4.3 of directive 2014/68/UE - ErP Ecodesgin directive 2009/125/CE

CORDIVARI

BOLLY® **MURALE**

HANGED POLYWARM® COATED CALORIFIER FOR D.H.W. PRODUCTION WITH 1 FIXED HIGH EFFICIENCY HEAT EXCHANGER



APPLICATION
Production and storage of domestic hot water (DHW).
MATERIAL
Mild steel Polywarm® coated (Attestation ACS - SSICA - DVGW - W270 - WRAS) .
Complete with wall brackets.
HEAT EXCHANGER
Mild steel Polywarm® coated heat exchanger.
INSULATION
Ecological hard polyurethane foam with high thermal insulation or painted galvanized metallic cover PVC external lining complete with top cover.

CATHODE PROTECTION
Magnesium anode.
DRAIN
External confluence through drain connection.
WARRANTY
5 years - See general sales conditions and warranty
ACCESSORIES AND SPARE PARTS
See Accessories section for the entire list.

POLYWARM® COATED DHW STORAGE

POLYWARM® COATED HEAT EXCHANGER

STOCK AVAILABILITY

cordivari.com/erp

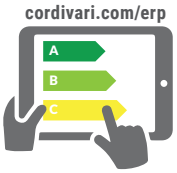

On line ErP label tool



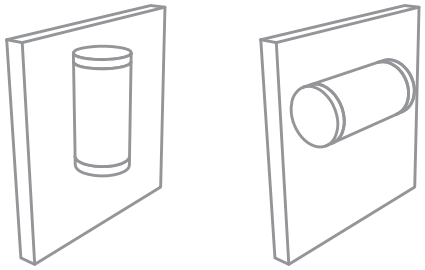

Vertical or horizontal wall hanged

BOLLY® MURALE WB

Model	HARD FOAM insulation + PVC Art. Nr.	HEAT EXCHANGER SURFACE [m²]	ENERGY EFFICIENCY CLASS
80	3104160900021	0,44	C
100	3104160900022	0,44	C
150	3104160900023	0,63	C
200	3104160900024	0,84	C
300	3104160900025	1,22	C

BOLLY® MURALE WBL

Model	HARD FOAM insulation + METALLIC COVER Art. Nr.	HEAT EXCHANGER SURFACE [m²]	ENERGY EFFICIENCY CLASS
80	3104160900026	0,44	C
100	3104160900027	0,44	C
150	3104160900028	0,63	C
200	3104160900029	0,84	C
300	3104160900030	1,22	C

Model	Output	Ignition time	Production of D.H.W.	
	Data have been calculated with primary water at 80°C - DHW production from 10°C to 45°C, and storage at 60 °C			
	[kW]	[min]	[lt/h]	[lt/10']
80	14	26	345	171
100	14	32	345	200
150	21	33	508	298
200	29	32	704	403
300	42	34	1027	599

ACCESSORIES

Easy control unit mounted on the wall

ART. NR.	FOR MODELS
5005000310001	WB



Thermometer

Art. Nr.
5032240000107
5 units box



Magnesium anode

ART. NR.	Model
5200000041015	80÷150
5200000041010	200÷300
2 units box	



Electric immersion heater with thermostat

Art. Nr.	Output	Connection
5240000000042	1,5 kW	1" 1/4



P.E.D. product designed and produced in conformity to the article 4.3 of directive 2014/68/UE - ErP Ecodesgin directive 2009/125/CE

BOLLY® **MURALE**

HANGED POLYWARM® COATED CALORIFIER FOR D.H.W. PRODUCTION WITH 1 FIXED HIGH EFFICIENCY HEAT EXCHANGER

STORAGE		HEAT EXCHANGER	
Pmax	Tmax	Pmax	Tmax
10 bar	90 °C	12 bar	110 °C

CORDIVARI Lab

TÜV Rheinland Energie und Umwelt GmbH states that test procedures and Cordivari LAB are certified conforming to European standard EN 15332, as indicated by Ecodesign ErP Directive.

TESTED ErP

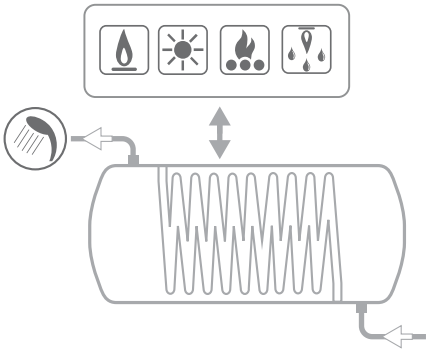

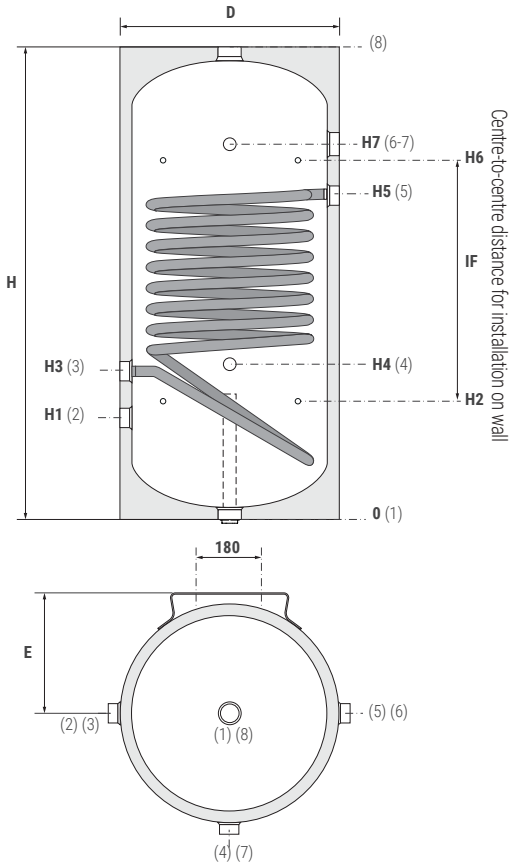

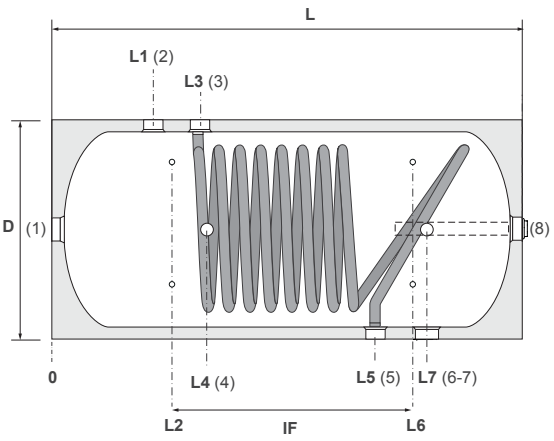

1	Connection 1"1/4 F
2	Domestic cold water circuit inlet 1"1/4 F
3	Primary circuit outlet 1"1/4 F
4	Instrumentation 1/2" F
5	Primary circuit inlet 1"1/4 F
6	Instrumentation 1/2" F
7	Domestic hot water outlet 1"1/4 F
8	Magnesium anode 1"1/4 F

Model	Volume	Weight	D	H/L	H1/L1	H2/L2	H3/L3	H4/L4	H5/L5	H6/L6	H7/L7	IF	E
	[lt]	[Kg]	[mm]										
80	84	25	456	800	195	235	290	315	510	600	605	365	250
100	103	29	456	954	205	222	300	315	655	732	750	510	250
150	149	40	456	1330	205	335	300	315	1030	1005	1125	670	250
200	191	47	510	1350	215	320	310	325	1040	1035	1135	715	275
300	293	62	610	1400	240	345	335	350	1065	1060	1160	715	325

P.E.D. product designed and produced in conformity to the article 4.3 of directive 2014/68/UE - ErP Ecodesgin directive 2009/125/CE

BOLLY® **MURALE**

HEAT EXCHANGERS TECHNICAL DATA



Data have been calculated on following basis:
1) Primary circuit at T1 and proper energy source;
2) Production of DHW in continuous way from 10 °C at t2;
3) DHW that can be taken in the first 10' and in the first hour from storage at 60°C, input 10°C and output 45°C;
4) Sanitary water according to UNI CTI 8065.

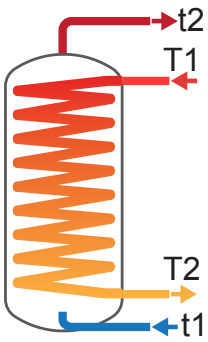

Model	Primary Flow rate	Ignition time (minutes) from 10 °C to t2 and primary at T1				Maximum power exchange (kW) with primary at T1, secondary within 10-45 °C and constant use of DHW production				DHW continuous production lt/h within 10-45 °C and primary at T1			
	[m³/h]	T1/t2				T1				T1			
		55/50	65/60	70/60	80/60	55	65	70	80	55	65	70	80
80	2	80	85	55	35	4,9	7,3	8,6	11,2	114	175	207	270
	1	90	96	61	39	4,5	6,7	7,9	10,2	105	160	188	245
100	2	99	105	68	43	4,9	7,3	8,6	11,2	114	175	207	270
	1	111	119	76	48	4,5	6,7	7,9	10,2	105	160	188	245
150	2	105	111	74	47	6,5	9,7	11,3	14,7	154	234	275	358
	1	119	126	84	54	6	8,8	10,3	13,2	141	218	248	322
200	2,5	91	95	65	42	9,2	13,8	16,2	21	223	337	395	513
	1,25	102	108	73	48	8,6	12,7	14,7	19	206	308	359	464
300	3	98	102	70	46	13,1	19,6	22,9	29,6	318	479	561	727
	1,5	110	115	80	52	12,2	17,9	20,8	26,7	296	438	510	656

Model	Primary Flow rate	DHW produced in the first 10 minutes in lt/10' input 10 °C output 45 °C, storage at t2 and primary at T1				DHW produced in the first hour in lt/60' input 10 °C output 45 °C, storage at t2 and primary at T1				Heat exchanger pressure loss	
	[m³/h]	T1/t2				T1/t2				[mm H_2O]	[mbar]
		55/50	65/60	70/60	80/60	55/50	65/60	70/60	80/60		
80	2	110	143	149	159	183	254	280	330	175	17
	1	109	141	146	155	175	242	265	310	51	5
100	2	133	172	177	188	205	283	308	359	175	17
	1	132	170	174	184	198	271	293	339	51	5
150	2	191	246	253	267	289	394	427	494	229	22
	1	189	243	248	261	279	382	406	465	67	7
200	2,5	249	320	330	350	390	534	580	675	472	46
	1,25	246	316	324	342	376	511	551	635	139	14
300	3	379	487	501	528	580	790	856	989	908	89
	1,5	375	480	492	516	563	758	815	932	268	26

HEAT EXCHANGERS PRESSURE LOSS

Heat exchangers surface [m²]	
80	0,44
100	0,44
150	0,63
200	0,84
300	1,22

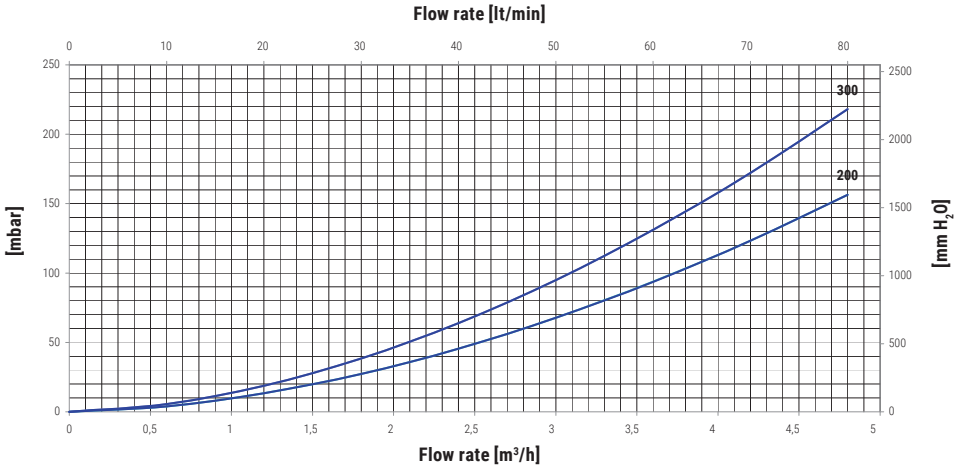

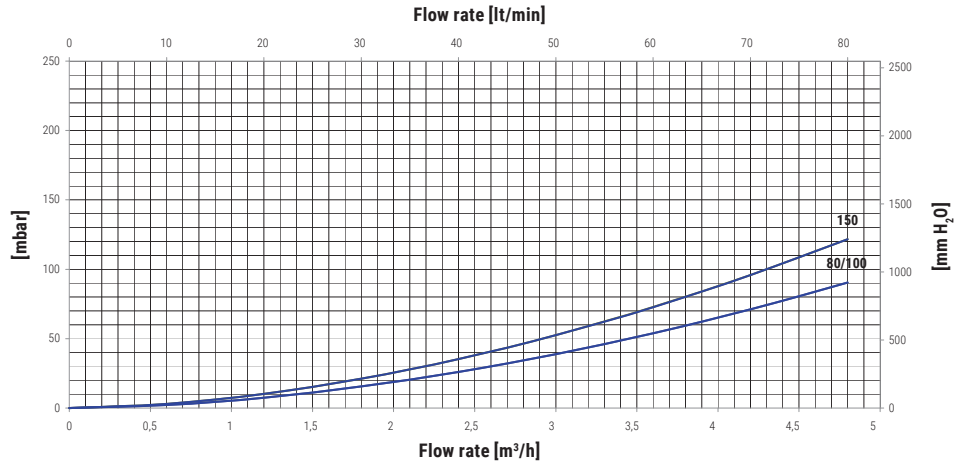

BOLLY® **MURALE**

HEAT EXCHANGERS TECHNICAL DATA



Heat Exchanger output referred to temperature and flow rate of primary circuit and with secondary at 10/45°C at maximum withdrawal of producible DHW (Upper limit of the curves referred to maximum primary flow rate in the heat exchanger, while the lower limit in the curves refer to the minimum primary flow rate)

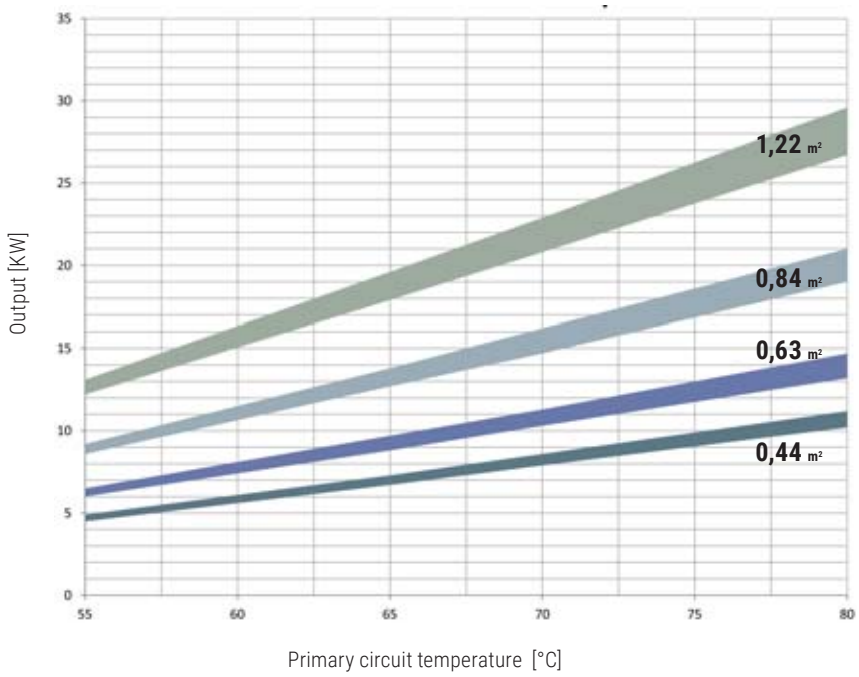

Heat exchanger surface [m²]	0,44		0,63		0,84		1,22	
Flow rate [m³/h]	MAX	MIN	MAX	MIN	MAX	MIN	MAX	MIN
	2	1	2	1	2,5	1,25	3	1,5

EXAMPLE OF INSTALLATION WITH **BOLLY® MURALE**

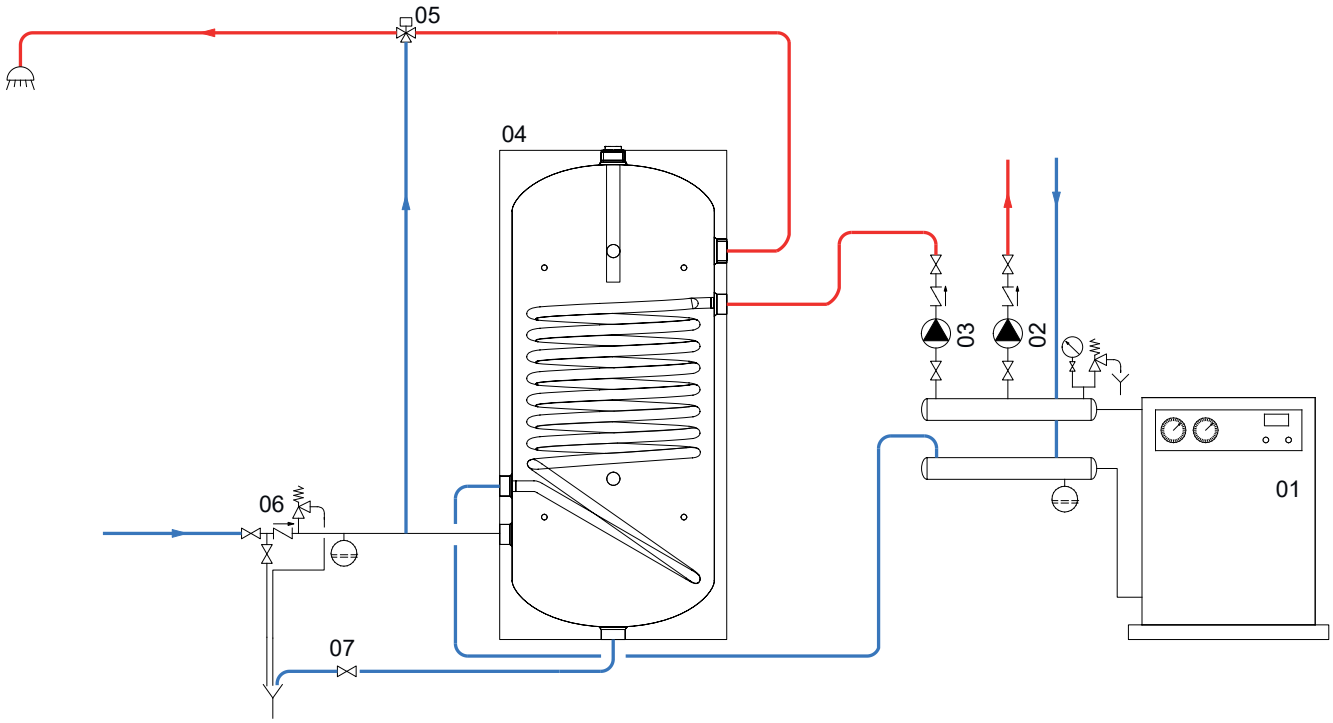

01	Generator	03	D.H.W. circulation group	05	Thermostatic mixing valve	07	Blowdown valve
02	Heating system circulation group	04	Bolly® Murale	06	Hydraulic safety group		

BOLLY® **PRIMO**

POLYWARM® COATED CALORIFIER FOR D.H.W. PRODUCTION WITH 1 FIXED HEAT EXCHANGER FOR WALL OR FLOOR STANDING INSTALLATION



APPLICATION
Production and storage of domestic hot water (DHW).
MATERIAL
Mild steel Polywarm® coated (Attestation ACS - SSICA - DVGW - W270 - WRAS)
HEAT EXCHANGER
Mild steel Polywarm® coated heat exchanger.
INSULATION
High thermal insulation with ecological polyurethane hard foam.
Grey PVC external lining.
CATHODE PROTECTION
Magnesium anode.

DRAIN
External confluence through drain connection (vertical version).
WARRANTY
2 years - See general sales conditions and warranty
ACCESSORIES AND SPARE PARTS
See Accessories section for the entire list.

NEW

POLYWARM® COATED DHW STORAGE

POLYWARM® COATED HEAT EXCHANGER



cordivari.com/erp



On line ErP label tool

BOLLY® PRIMO

Model	HARD FOAM insulation		HEAT EXCHANGER SURFACE	ENERGY EFFICIENCY CLASS
	Pallet Art. Nr.	PIECES per pallet	[m²]	ErP
100	310416090005206	**6**	0,44	**C**
150	310416090005306	**6**	0,63	**C**
200	310416090005404	**4**	0,84	**C**
300	310416090005504	**4**	1,22	**C**

Model	Output	Ignition time	Production of D.H.W.	
	Data have been calculated with primary water at 80°C - DHW production from 10°C to 45°C, and storage at 60 °C			
	[kW]	[min]	[lt/h]	[lt/10']
100	14	32	345	200
150	21	33	508	298
200	29	32	704	403
300	42	34	1027	599

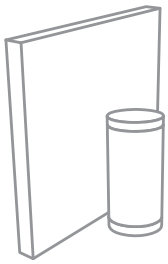

Floor standing

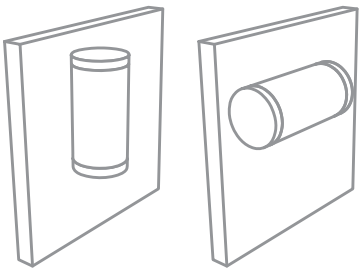

With the wall mounting kit (optional) it is possible to install the tank vertically or horizontally

ACCESSORIES

Wall fixing kit

ART. NR.	For model
5221000000069	100
5221000000070	150
5221000000071	200
5221000000072	300
zinc-coated brackets +PVC bottom cover	



Thermometer

Art. Nr.
5032240000107
5 units box



Electric immersion heater with thermostat

Art. Nr.	Output	Connection
5240000000042	1,5 kW	1" 1/4



Magnesium anode

ART. NR.	Model
5200000041015	100÷150
5200000041010	200÷300
2 units box	



P.E.D. product designed and produced in conformity to the article 4.3 of directive 2014/68/UE - ErP Ecodesgin directive 2009/125/CE

BOLLY® **PRIMO**

POLYWARM® COATED CALORIFIER FOR D.H.W. PRODUCTION WITH 1 FIXED HEAT EXCHANGER FOR WALL OR FLOOR STANDING INSTALLATION

STORAGE		HEAT EXCHANGER	
Pmax	Tmax	Pmax	Tmax
10 bar	90 °C	12 bar	110 °C

CORDIVARI Lab

TÜV Rheinland Energie und Umwelt GmbH states that test procedures and Cordivari LAB are certified conforming to European standard EN 15332, as indicated by Ecodesign ErP Directive.

TESTED ErP

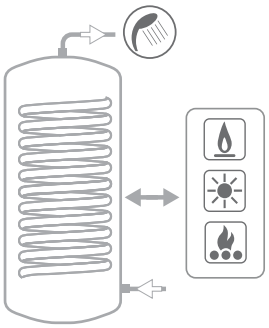

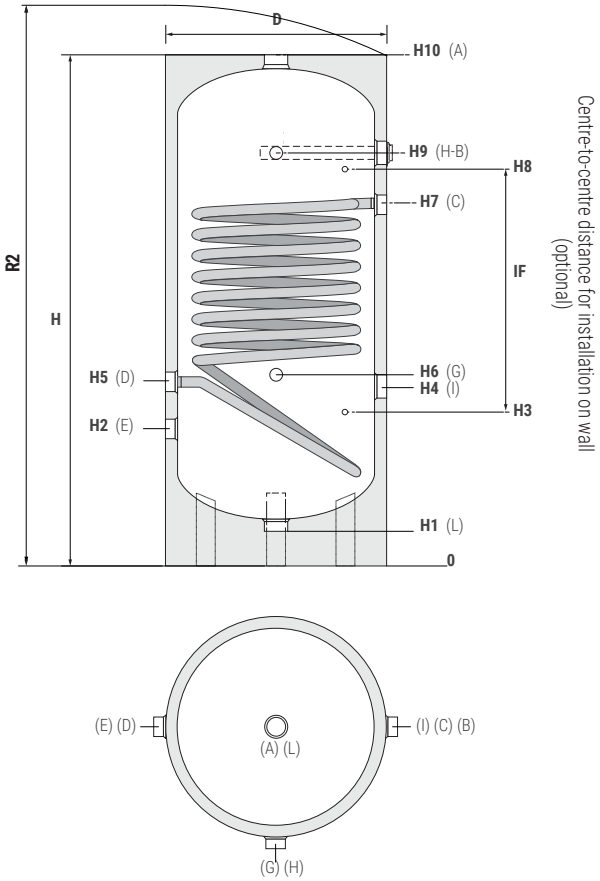

Centre-to-centre distance for installation on wall (optional)

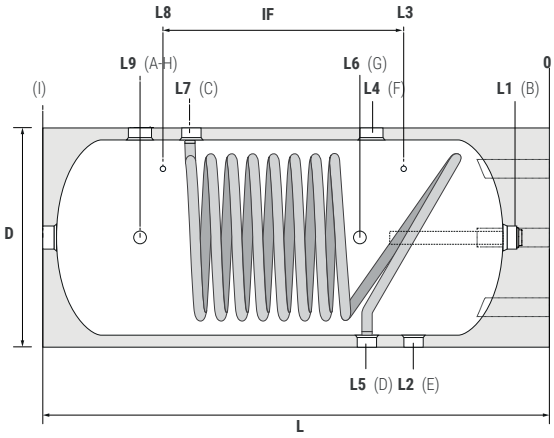

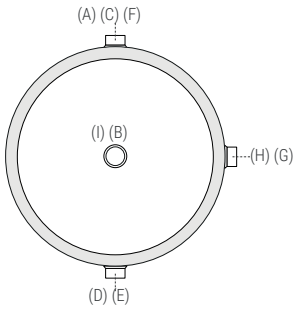

A	Domestic hot water outlet 1"1/4 F
B	Magnesium anode 1"1/4 F
C	Primary circuit inlet 1" F
D	Primary circuit outlet 1" F
E	Domestic cold water circuit inlet 1"1/4 F
G	Instrumentation 1/2" F
H	Instrumentation 1/2" F
I	Connection for electric immersion heater 1"1/4 F
L	Drain 1"1/4 F

Model	Volume	Weight	D	H/L	H1/L1	H2/L2	H3/L3	H4/L4	H5/L5	H6/L6	H7/L7	H8/L8	H9/L9	IF	R2
	[lt]	[kg]	[mm]												
100	103	29	450	1026	73	277	295	362	372	387	727	805	822	510	1124
150	149	40	450	1401	73	277	407	437	372	387	1102	1067	1197	670	1471
200	191	47	510	1424	76	290	395	450	385	400	1115	1105	1210	715	1513
300	293	62	610	1471	71	311	416	421	406	421	1136	1126	1231	715	1592

P.E.D. product designed and produced in conformity to the article 4.3 of directive 2014/68/UE - ErP Ecodesgin directive 2009/125/CE

CORDIVARI

INTERKA

POLYWARM® COATED DOUBLE WALLED CALORIFIERS FOR D.H.W. PRODUCTION



APPLICATION
Production and storage of domestic hot water (DHW).
MATERIAL
Mild steel Polywarm® coated (Attestation ACS - SSICA - DVGW - W270 - WRAS) .
HEAT EXCHANGER
Heat exchanger ad intercapedine posizionato sulla virola del Water tank.

INSULATION
High thermal insulation with ecological polyurethane hard foam.
Grey PVC external lining.
CATHODE PROTECTION
Magnesium anode.
WARRANTY
5 years - See general sales conditions and warranty
ACCESSORIES AND SPARE PARTS
See Accessories section for the entire list.

POLYWARM® COATED DHW STORAGE

STOCK AVAILABILITY



INTERKA WB

Model	HARD FOAM insulation Art. Nr.	DOUBLE WALLED HEAT EXCHANGER SURFACE [m²]	ENERGY EFFICIENCY CLASS
80	3203160310001	0,36	**C**
100	3203160310002	0,54	**C**
150	3203160310003	0,82	**C**
200	3203160310004	1,00	**C**
300	3203160310015	1,40	**C**



cordivari.com/erp



On line ErP label tool

Model	Output [KW]	Ignition time [min]	Production of D.H.W. [lt/h]	Production of D.H.W. [lt/10']	Weight [Kg]
80	8	27	190	112	24
100	11	24	263	144	30
150	15	26	372	212	41
200	20	25	508	285	49
300	24	31	606	401	65

Data have been calculated with primary water at 80°C - DHW production from 10°C to 45°C, and storage at 60 °C

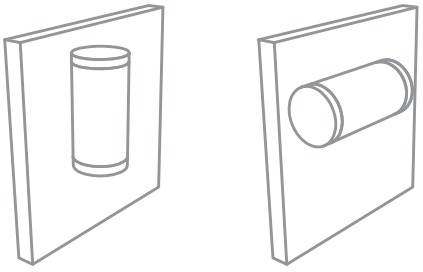

VERTICAL or HORIZONTAL WALL HANGED

ACCESSORIES

Easy control unit mounted on the wall

ART. NR.	FOR MODELS
5005000310001	WB



Thermometer

Art. Nr.
5032240000107
5 units box



Magnesium anode

ART. NR.	Model
5200000041015	80÷150
5200000041010	200÷300
2 units box	



Electric immersion heater with thermostat

Art. Nr.	Output	Connection
5240000000042	1,5 kW	1" 1/4



P.E.D. product designed and produced in conformity to the article 4.3 of directive 2014/68/UE - ErP Ecodesgin directive 2009/125/CE

INTERKA

POLYWARM® COATED DOUBLE WALLED TANK IN TANK CALORIFIERS FOR D.H.W. PRODUCTION

STORAGE		HEAT EXCHANGER	
Pmax	Tmax	Pmax	Tmax
6 bar	90 °C	1,5 bar	99 °C

CORDIVARI Lab

TÜV Rheinland Energie und Umwelt GmbH states that test procedures and Cordivari LAB are certified conforming to European standard EN 15332, as indicated by Ecodesign ErP Directive.

TESTED ErP

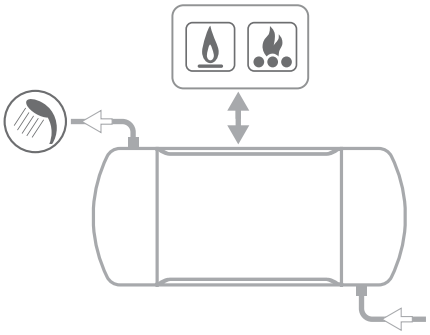

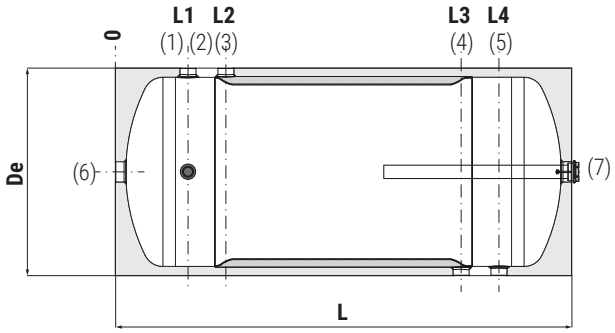

1	Instrumentation 1/2" F
2	Domestic hot water outlet 1"1/4 F
3	Primary circuit inlet
4	Primary circuit outlet
5	Domestic cold water circuit inlet 1"1/4 F
6	Recirculation/electric immersion heater 1"1/4 F
7	Connection for magnesium anode 1"1/4 F

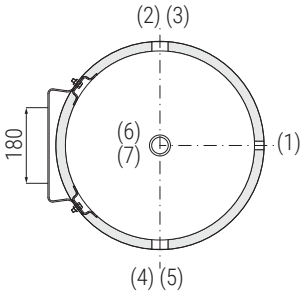

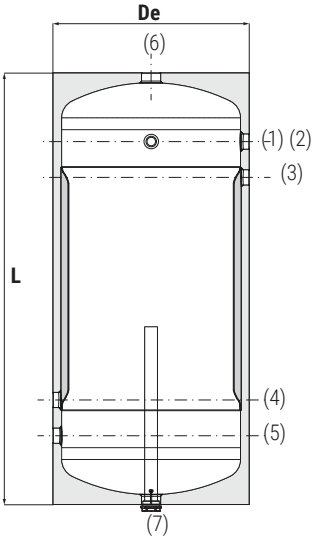

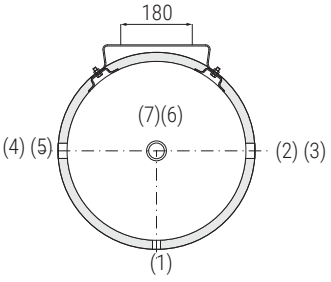

POSSIBLE VERTICAL INSTALLATION

NOTE:
THIS INSTALLATION MAY REDUCE THE D.H.W. STORAGE VOLUME.

Model	Volume	De	L	L1	L2	L3	L4	3-4
	[lt]	[mm]						Connections F
80	82	456	770	165	260	510	605	1"
100	100	456	920	165	260	660	755	1"
150	152	510	1086	173	268	818	913	1"
200	203	560	1170	190	285	885	980	1"
300	293	610	1399	230	325	1075	1170	1"

P.E.D. product designed and produced in conformity to the article 4.3 of directive 2014/68/UE - ErP Ecodesgin directive 2009/125/CE

INTERKA **SOLARE EVO**

POLYWARM® COATED DOUBLE WALLED CALORIFIERS FOR D.H.W. PRODUCTION SUITABLE FOR SOLAR THERMAL SYSTEMS



APPLICATION
Production and storage of domestic hot water (DHW).
MATERIAL
Mild steel Polywarm® coated (Attestation ACS - SSICA - DVGW - W270 - WRAS) .
HEAT EXCHANGER
Double walled heat exchanger.

INSULATION
High thermal insulation with ecological polyurethane hard foam.
Pre-painted sheet external lining and ABS cupels.
CATHODE PROTECTION
Magnesium anode.
WARRANTY
5 years - See general sales conditions and warranty
ACCESSORIES AND SPARE PARTS
See Accessories section for the entire list.

POLYWARM® COATED DHW STORAGE

STOCK AVAILABILITY



cordivari.com/erp



On line ErP label tool

INTERKA SOLARE EVO WB

Model	HARD FOAM insulation	DOUBLE WALLED HEAT EXCHANGER SURFACE		ENERGY EFFICIENCY CLASS
	Art. Nr.	Surface [m²]	Volume [lt]	ErP
150	3068160980112	0,80	8,0	**B**
200	3068160980113	1,20	12,0	**B**
300	3068160980124	2,05	21,0	**B**

ACCESSORIES

Electric immersion heater with cover

Art. Nr.	Output	Con-nection	
5240000000062	1,5 kW	1" 1/4	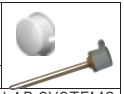
See CORDIVARI INTEGRATED THERMAL SOLAR SYSTEMS CATALOGUE			

Thermometer

Art. Nr.	
5032240000107	
5 units box	

Magnesium anode

ART. NR.	Model	
5200000041008	150	
5200000041009	200,300	
2 units box		

P.E.D. product designed and produced in conformity to the article 4.3 of directive 2014/68/UE - ErP Ecodesgin directive 2009/125/CE

INTERKA **SOLARE EVO**

POLYWARM® COATED DOUBLE WALLED TANK IN TANK CALORIFIERS FOR D.H.W. PRODUCTION SUITABLE FOR SOLAR THERMAL SYSTEMS

STORAGE		HEAT EXCHANGER	
Pmax	Tmax	Pmax	Tmax
6 bar	90 °C	2,5 bar	99 °C

CORDIVARI Lab

TÜV Rheinland Energie und Umwelt GmbH states that test procedures and Cordivari LAB are certified conforming to European standard EN 15332, as indicated by Ecodesign ErP Directive.

TESTED ErP

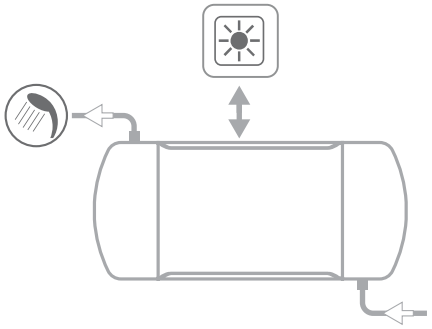

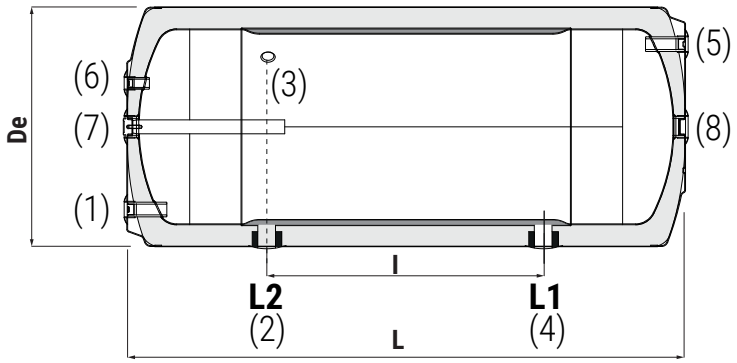

1	Domestic water inlet 3/4" F
2	Solar collector connection 3/4" F
3	Purge volume 1/2" F
4	Solar collector connection 3/4" F
5	Domestic hot water outlet 3/4" F
6	Instrumentation 1/2" F
7	Magnesium anode
8	Electric immersion heater 1"1/4 F (optional)



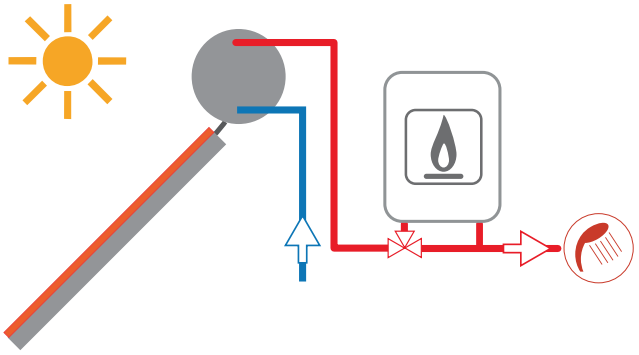

Model	Volume	De	L	I	L1	L2
	[lt]	[mm]				
150	143	550	1040	430	298	728
200	183	550	1300	640	323	963
300	270	550	1839	890	475	1365

P.E.D. product designed and produced in conformity to the article 4.3 of directive 2014/68/UE - ErP Ecodesgin directive 2009/125/CE

CORDIVARI

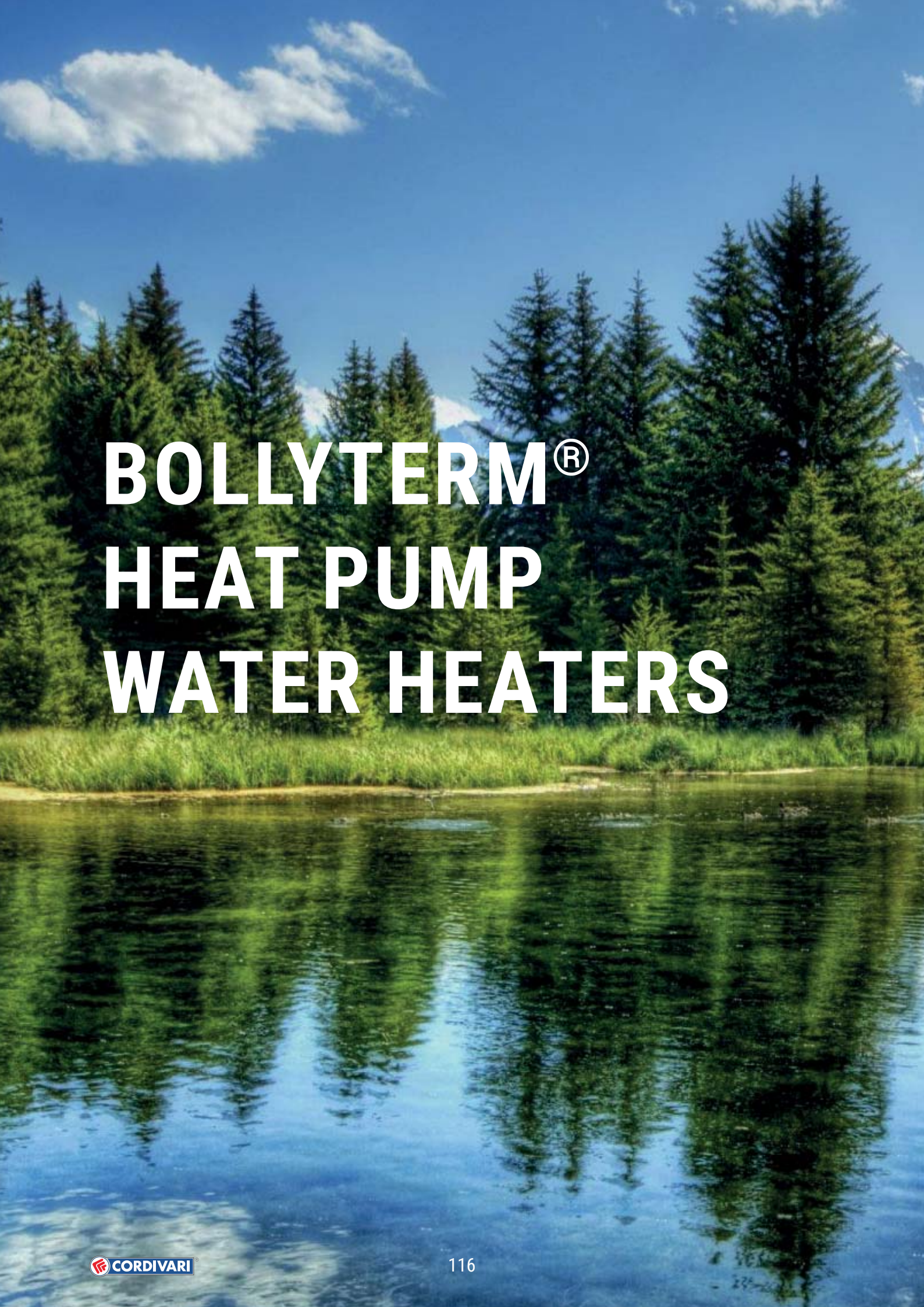

BOLLYTERM® HEAT PUMP WATER HEATERS



BOLLYTERM® RANGE

DHW production





	Bollyterm® HP	Bollyterm® HP 1
Heat exchanger model	Water heater with integrated heat pump	- Water heater with integrated heat pump - 1 Fixed coil heat exchanger
Number of heat exchangers		
Energy source		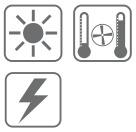
Energy efficiency class	**A+**	**A+**
Insulation	Polyurethane hard foam	Polyurethane hard foam
Available range	200 - 300	200 - 300
Installation	Floor standing	Floor standing
Suggested Application	Traditional installations	Traditional, solar and condensation installations

	Bollyterm® HP 2	Bollyterm® HOME
		
	- Water heater with integrated heat pump - 2 Fixed coil heat exchangers	- Water heater with integrated heat pump
		
		
	A+	**A+**
	Polyurethane hard foam	Polyurethane hard foam
	300	80 - 110
	Floor standing	Wall hanging
	Traditional, solar and condensation installations	Traditional installations

BOLLYTERM® **HP**

POLYWARM® COATED CALORIFIER WITH INTEGRATED HEAT PUMP



APPLICATION
Production and storage of domestic hot water (DHW).
MATERIAL
Mild steel Polywarm® coated (Attestation ACS - SSICA - DVGW - W270 - WRAS)
HEAT PUMP
The water inside the tank is warmed up by an integrated insulated compressor heat pump, equipped with external condensing coil. A 1500 Watt electric resistance with "BOOST" option is already installed.
Electronic central unit with graphic display allows controlling and planning.
INSULATION
High thermal insulation with ecological polyurethane hard foam.
EXTERNAL LINING
Upper cover and flange cover in ABS.
CATHODE PROTECTION
Magnesium anode.
DRAIN
External confluence through drain connection.
GASKET- FLANGE PLATE
Silicone gaskets suitable for water intended for human consumption (tested according to 98/83/CE), max temperature up to 200°C. Mild steel Polywarm® coated flange plate with electrical immersion resistance .
WARRANTY
5 years (tank)
See general sales conditions and warranty for electrical parts.
ACCESSORIES AND SPARE PARTS
See Accessories section for the entire list.

POLYWARM® COATED DHW STORAGE

STOCK AVAILABILITY

cordivari.com/erp

On line ErP label tool

Percorso Efficienza Innovazione
MCE - EXPOCOMFORT



BOLLYTERM® HP

Model	HARD FOAM insulation	ENERGY EFFICIENCY CLASS
	Art. Nr.	ErP
200	3180162330102	**A+**
300	3180162330103	**A+**

Model	Net volume heated by heat pump	Room temperature output	C.O.P.	ErP Energy efficiency class (Reg EU 812/2013)	Ignition time (Air temperature 20 °C - Water temperature from 15 °C to 55 °C)	Electric integration power	Maximum absorption	
							Heat pump	Total
	[lt]	[°C]			[min]	[W]	[W]	
200	176	-5/+43	2,98(*)	A+	236'	1500	805	2305
300	264		2,91(*)	A+	353'			

(*) Data obtained under the following conditions (T air 20 °C - T water from 15 °C to 55 °C)

INTEGRATED HEAT PUMP

The Bollyterm HP produces DHW thanks to the heat energy naturally present in the air, allowing considerable energy savings.
The functioning of the heat pump is based on the exploitation of a particular ecological gas (R134a) that, through its compression and expansion, ensures high performance and cost efficiency.
The energy (heat) is transferred from the air to the water through a condenser coil wrapped outside the tank, avoiding any possible contact between the fluid and the sanitary water, ensuring therefore maximum hygiene and safety.
The output is indicated by the coefficient of performance C.O.P. indicating the relation between used and obtained energy.



HEAT PUMP TECHNICAL DATA						
Power supply	Max water temperature	Coolant type	Coolant Pressure	Max ducts length/ Max static P	Minimum pipes diameter	Acoustic level
[V / Ph / Hz]	[°C]	[tipo]	[g]	[m / Pa]	[mm]	[dB]
220-240 / 1 / 50	60	R134a	800	8 / 60	180	59 (*)

(*) Test complaint with European standard EN 12102:2013 – EN ISO 3741:2010

ACCESSORIES

Thermometer

Art. Nr.
5032240000107
5 units box



Titanium electronic anode

See Accessories section

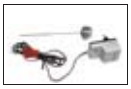

P.E.D. product designed and produced in conformity to the article 4.3 of directive 2014/68/UE - ErP Ecodesgin directive 2009/125/CE

BOLLYTERM® **HP**

POLYWARM® COATED CALORIFIER WITH INTEGRATED HEAT PUMP

STORAGE	
Pmax	Tmax
10 bar	90 °C

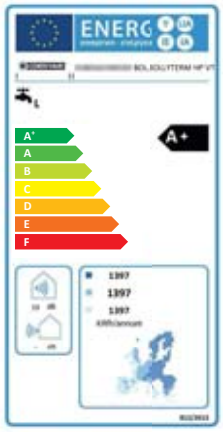

CORDIVARI Lab

TÜV Rheinland Energie und Umwelt GmbH states that test procedures and Cordivari LAB are certified conforming to European standard EN 15332, as indicated by Ecodesign ErP Directive.

TESTED ErP

IMQ CLIMA

CENTRO DI INNOVAZIONE TECNOLOGICA AGEMONT

POLITECNICO DI MILANO
DIPARTIMENTO DI ENERGIA
REALAB- RENEWABLE HEATING AND COOLING LAB

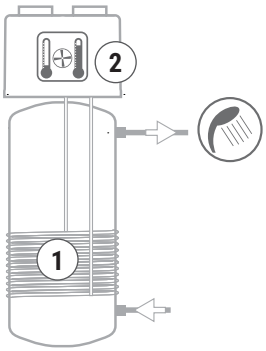

See TECHNICAL SUPPORT chapter for example of installation

1 External to the storage, condensator coil avoiding any contact between coolant - D.H.W.

2 Electronic central unit (included):
- set point hot water
- self check
- anti-legionellosis treatement
- operating programs
- "BOOST" mode

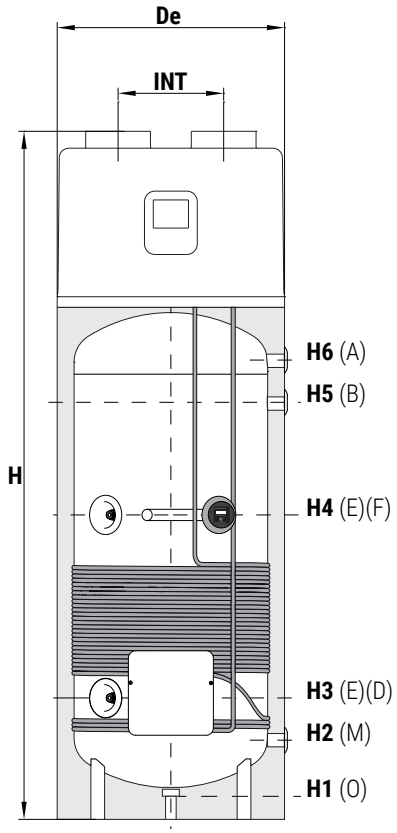

A	Domestic hot water circuit outlet 1" F
B	Recirculation 1" F
D	Flange for inspection Ø 75 mm / Electric immersion heater
E	Probe 1/2" F
F	Magnesium anode 1"1/4 F
M	Domestic cold water circuit inlet 1" F
O	Drain 1" 1/4 F

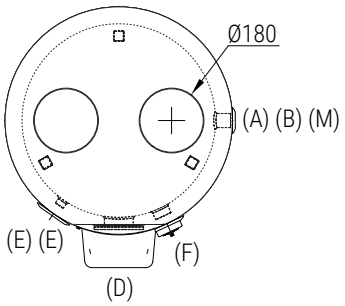

Model	Volume	De	INT	H	H1	H2	H3	H4	H5	H6
	[lt]	[mm]								
200	205	640	340	1585	71	240	350	800	815	925
300	293	640	340	1960	71	240	350	860	1190	1300

P.E.D. product designed and produced in conformity to the article 4.3 of directive 2014/68/UE - ErP Ecodesgin directive 2009/125/CE

BOLLYTERM® **HP 1**

POLYWARM® COATED CALORIFIER WITH INTEGRATED HEAT PUMP AND 1 FIXED HEAT EXCHANGER



APPLICATION
Production and storage of domestic hot water (DHW).
MATERIAL
Mild steel Polywarm® coated (Attestation ACS - SSICA - DVGW - W270 - WRAS)
HEAT PUMP
The water inside the tank is warmed up by an integrated insulated compressor heat pump equipped with external condensing coil. A 1500 Watt electric resistance with "BOOST" option is already installed.
Electronic central unit with graphic display allows controlling and planning.
HEAT EXCHANGER:
Polywarm® coated fixed heat exchanger.
INSULATION
High thermal insulation with ecological polyurethane hard foam.
EXTERNAL LINING
Upper cover and flange cover in ABS.
CATHODE PROTECTION
Magnesium anode.
DRAIN
External confluence through drain connection.
GASKET- FLANGE PLATE
Silicone gaskets suitable for water intended for human consumption (tested according to 98/83/CE), max temperature up to 200°C. Mild steel Polywarm® coated flange plate with electrical immersion resistance .
WARRANTY
5 years (tank)
See general sales conditions and warranty for electrical parts.
ACCESSORIES AND SPARE PARTS
See Accessories section for the entire list.

POLYWARM® COATED DHW STORAGE

POLYWARM® COATED HEAT EXCHANGER

STOCK AVAILABILITY

cordivari.com/erp

On line ErP label tool

Percorso Efficienza Innovazione
MCE - EXPOCOMFORT



BOLLYTERM® HP 1

Model	HARD FOAM insulation Art. Nr.	HEAT EXCHANGER SURFACE [m²]	ENERGY EFFICIENCY CLASS ErP
200	3181162330102	0,8	**A+**
300	3181162330103	1,2	**A+**

Model	Net volume heated by heat pump	Room temperature output	C.O.P.	ErP Energy efficiency class (Reg EU 812/2013)	Ignition time (Air temperature 20 °C - Water temperature from 15 °C to 55 °C)	Electric integration power	Maximum absorption	
							Heat pump	Total
	[lt]	[°C]			[min]	[W]	[W]	
200	176	-5/+43	2,98(*)	A+	236'	1500	805	2305
300	264		2,91(*)	A+	353'			

(*) Data obtained under the following conditions: T air 20 °C - T water from 15 °C to 55 °C, according to EN 16147

INTEGRATED HEAT PUMP

The Bollyterm HP produces DHW thanks to the heat energy naturally present in the air, allowing considerable energy savings.
The functioning of the heat pump is based on the exploitation of a particular ecological gas (R134a) that, through its compression and expansion, ensures high performance and cost efficiency.
The energy (heat) is transferred from the air to the water through a condenser coil wrapped outside the tank, avoiding any possible contact between the fluid and the sanitary water, ensuring therefore maximum hygiene and safety.
The output is indicated by the coefficient of performance C.O.P. indicating the relation between used and obtained energy.



HEAT PUMP TECHNICAL DATA						
Power supply	Max water temperature	Coolant	Coolant Pressure	Max ducts length/ Max static P	Minimum pipes diameter	Acoustic level
[V / Ph / Hz]	[°C]	[tipo]	[g]	[m / Pa]	[mm]	[dB]
220-240 / 1 / 50	60	R134a	800	8 / 60	180	59 (*)

(*) Test complaint with European standard EN 12102:2013 – EN ISO 3741:2010

ACCESSORIES

Thermometer

Art. Nr.
5032240000107
5 units box



Titanium electronic anode

See Accessories section

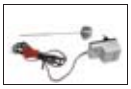

P.E.D. product designed and produced in conformity to the article 4.3 of directive 2014/68/UE - ErP Ecodesgin directive 2009/125/CE

BOLLYTERM® **HP 1**

POLYWARM® COATED CALORIFIER WITH INTEGRATED HEAT PUMP AND 1 FIXED HEAT EXCHANGER

STORAGE		HEAT EXCHANGER	
Pmax	Tmax	Pmax	Tmax
10 bar	90 °C	12 bar	110 °C

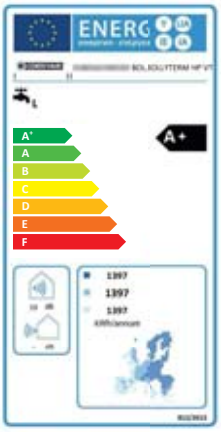

CORDIVARI Lab

TÜV Rheinland Energie und Umwelt GmbH states that test procedures and Cordivari LAB are certified conforming to European standard EN 15332, as indicated by Ecodesign ErP Directive.

TESTED ErP

IMQ CLIMA

CENTRO DI INNOVAZIONE TECNOLOGICA AGEMONT

POLITECNICO DI MILANO
DIPARTIMENTO DI ENERGIA
REALAB- RENEWABLE HEATING AND COOLING LAB

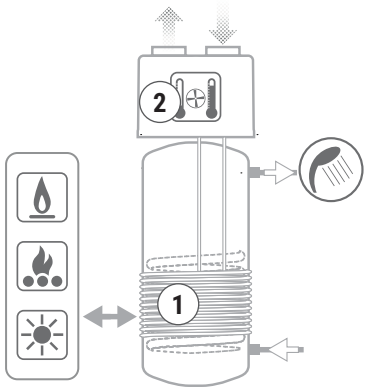

See TECHNICAL SUPPORT chapter for example of installation

BOLLYTERM® HEAT PUMP WATER HEATERS

1 External to the storage, condensator coil avoiding any contact between coolant - D.H.W.

2 Electronic central unit (included):
- set point hot water
- self check
- anti-legionellosis treatement
- operating programs
- "BOOST" mode

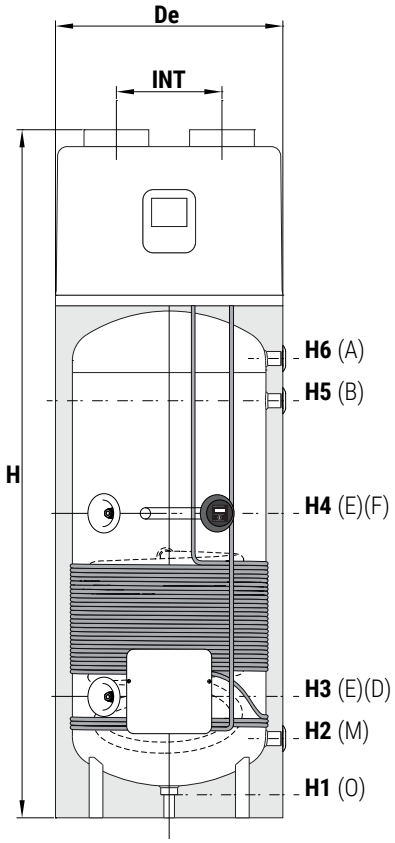

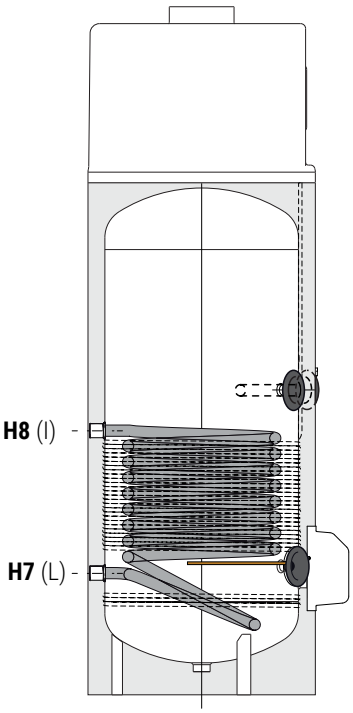

A	Domestic hot water circuit outlet 1" F
B	Recirculation 1" F
D	Flange for inspection Ø 75 mm / Electric immersion heater
E	Probe 1/2" F
E	Probe 1/2" F
F	Magnesium anode 1"1/4 F
I	Heat exchanger inlet 1"1/4 F
L	Heat exchanger outlet 1"1/4 F
M	Domestic cold water circuit inlet 1" F
O	Drain 1" 1/4 F

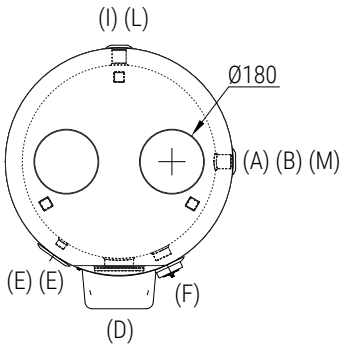

Model	Volume	De	INT	H	H1	H2	H3	H4	H5	H6	H7	H8
	[lt]	[mm]										
200	205	640	340	1585	71	240	350	800	815	925	345	765
300	293	640	340	1960	71	240	350	860	1190	1300	351	755

P.E.D. product designed and produced in conformity to the article 4.3 of directive 2014/68/UE - ErP Ecodesgin directive 2009/125/CE

CORDIVARI®

BOLLYTERM® **HP 2**

POLYWARM® COATED CALORIFIER WITH INTEGRATED HEAT PUMP AND 2 FIXED HEAT EXCHANGERS



APPLICATION
Production and storage of domestic hot water (DHW).
MATERIAL
Mild steel Polywarm® coated (Attestation ACS - SSICA - DVGW - W270 - WRAS)
HEAT PUMP
The water inside the tank is warmed up by an integrated insulated compressor heat pump equipped with external condensing coil. A 1500 Watt electric resistance with "BOOST" option is already installed.
Electronic central unit with graphic display allows controlling and planning.
HEAT EXCHANGER:
N° 2 Polywarm® coated fixed heat exchangers.
INSULATION
High thermal insulation with ecological polyurethane hard foam.
EXTERNAL LINING
Upper cover and flange cover in ABS.
CATHODE PROTECTION
Magnesium anode.
DRAIN
External confluence through drain connection.
GASKET- FLANGE PLATE
Silicone gaskets suitable for water intended for human consumption (tested according to 98/83/CE), max temperature up to 200°C. Mild steel Polywarm® coated flange plate with electrical immersion resistance .
WARRANTY
5 years (tank)
See general sales conditions and warranty for electrical parts.
ACCESSORIES AND SPARE PARTS
See Accessories section for the entire list.

POLYWARM® COATED DHW STORAGE

POLYWARM® COATED HEAT EXCHANGER

STOCK AVAILABILITY

cordivari.com/erp

On line ErP label tool

Percorso Efficienza Innovazione
MCE - EXPOCOMFORT



BOLLYTERM® HP 2

Model	HARD FOAM insulation	HEAT EXCHANGER SURFACE Lower	Upper	ENERGY EFFICIENCY CLASS
	Art. Nr.	[m²]		
300	3180162330013	1,2	0,67	**A+**

Model	Net volume heated by heat pump	Room temperature output	C.O.P.	ErP Energy efficiency class (Reg EU 812/2013)	Ignition time (Air temperature 20 °C - Water temperature from 15 °C to 55 °C)	Electric integration power	Maximum absorption	
							Heat pump	Total
	[lt]	[°C]			[min]	[W]	[W]	
300	264	-5/+43	2,91(*)	A+	353'	1500	805	2305

(*) Data obtained under the following conditions: T air 20 °C - T water from 15 °C to 55 °C, according to EN 16147

INTEGRATED HEAT PUMP

The Bollyterm HP produces DHW thanks to the heat energy naturally present in the air, allowing considerable energy savings.
The functioning of the heat pump is based on the exploitation of a particular ecological gas (R134a) that, through its compression and expansion, ensures high performance and cost efficiency.
The energy (heat) is transferred from the air to the water through a condenser coil wrapped outside the tank, avoiding any possible contact between the fluid and the sanitary water, ensuring therefore maximum hygiene and safety.
The output is indicated by the coefficient of performance C.O.P. indicating the relation between used and obtained energy.



HEAT PUMP TECHNICAL DATA						
Power supply	Max water temperature	Coolant	Coolant Pressure	Max ducts length/ Max static P	Minimum pipes diameter	Acoustic level
[V / Ph / Hz]	[°C]	[tipo]	[g]	[m / Pa]	[mm]	[dB]
220-240 / 1 / 50	60	R134a	800	8 / 60	180	59 (*)

(*) Test complaint with European standard EN 12102:2013 – EN ISO 3741:2010

ACCESSORIES

Thermometer

Art. Nr.
5032240000107
5 units box



Titanium electronic anode

See Accessories section

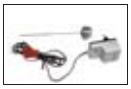

P.E.D. product designed and produced in conformity to the article 4.3 of directive 2014/68/UE - ErP Ecodesgin directive 2009/125/CE

BOLLYTERM® **HP 2**

POLYWARM® COATED CALORIFIER WITH INTEGRATED HEAT PUMP AND 2 FIXED HEAT EXCHANGERS

STORAGE		HEAT EXCHANGER	
Pmax	Tmax	Pmax	Tmax
10 bar	90 °C	12 bar	110 °C

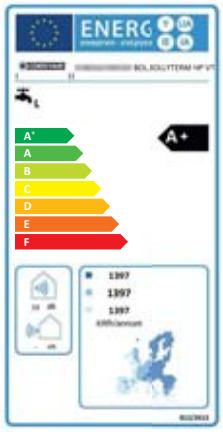

CORDIVARI Lab

TÜV Rheinland Energie und Umwelt GmbH states that test procedures and Cordivari LAB are certified conforming to European standard EN 15332, as indicated by Ecodesign ErP Directive.

TESTED ErP

IMQ CLIMA

CENTRO DI INNOVAZIONE TECNOLOGICA AGEMONT

POLITECNICO DI MILANO
DIPARTIMENTO DI ENERGIA
REALAB- RENEWABLE HEATING AND COOLING LAB

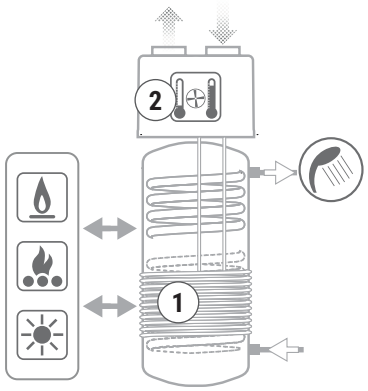

See TECHNICAL SUPPORT chapter for example of installation

BOLLYTERM® HEAT PUMP WATER HEATERS

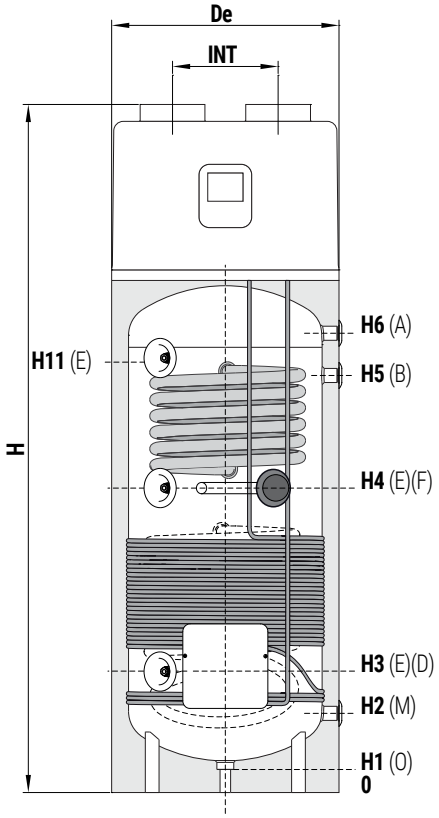

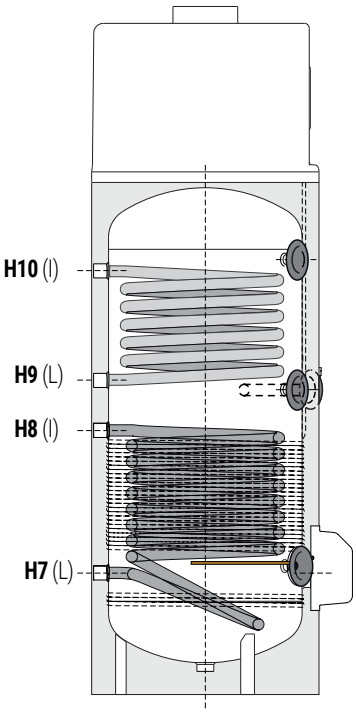

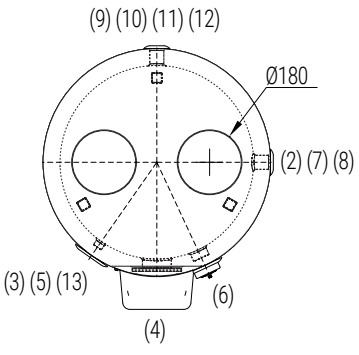

1. External to the storage, condensator coil avoiding any contact between coolant - D.H.W.

2. Electronic central unit (included):
- set point hot water
- self check
- anti-legionellosis treatement
- operating programs
- "BOOST" mode

A	Domestic hot water circuit outlet 1" F
B	Recirculation 1" F
D	Ispezione Ø 75 / Integrazione elettrica
E	Probe 1/2" F
F	Magnesium anode 1"1/4 F
I	Upper/Lower heat exchanger inlet 1" 1/4 F
L	Upper/Lower heat exchanger outlet 1" 1/4 F
M	Domestic cold water circuit inlet 1" F
O	Drain 1" 1/4 F

Model	Volume	De	INT	H	H1	H2	H3	H4	H5	H6	H7	H8	H9	H10	H11
	[lt]	[mm]													
300	293	640	340	1960	71	240	350	860	1190	1300	351	755	900	1140	1210

P.E.D. product designed and produced in conformity to the article 4.3 of directive 2014/68/UE - ErP Ecodesgin directive 2009/125/CE

CORDIVARI

BOLLYTERM® **HOME**

WALL HANGING WATER HEATER WITH INTEGRATED HEAT PUMP



APPLICATION
Production and storage of domestic hot water (DHW).
MATERIAL
Mild steel Polywarm® coated (Attestation ACS - SSICA - DVGW - W270 - WRAS)
HEAT PUMP
The water inside the tank is warmed up by an integrated insulated compressor heat pump equipped with external condensing coil. A 1500 Watt electric resistance with "BOOST" option is already installed.
Electronic central unit with graphic display allows controlling and planning.
INSULATION
High thermal insulation with ecological polyurethane hard foam.
EXTERNAL LINING
Painted metallic cover.

DRAIN
External confluence through drain connection.
WARRANTY
5 years (tank)
See general sales conditions and warranty for electrical parts.
ACCESSORIES AND SPARE PARTS
See Accessories section for the entire list.

NEW

POLYWARM® COATED DHW STORAGE

STOCK AVAILABILITY

cordivari.com/erp



On line ErP label tool



External to the storage, condensator coil avoiding any contact between coolant - D.H.W.

Electronic Central Unit (included):
- set point hot water
- self check
- anti-legionellosis treatement
- operating programs
- "BOOST" mode

BOLLYTERM® HOME

Model	HARD FOAM insulation	ENERGY EFFICIENCY CLASS
	Art. Nr.	ErP
80	3180162330050	**A+**
110	3180162330051	**A+**



TECHNICAL DATA						
Model	Net volume heated by heat pump	Room temperature output	C.O.P.	ErP Energy efficiency class (Reg EU 812/2013)	IGNITION TIME (heat pump)	IGNITION TIME (heat pump+electric immersion heater)
	[lt]	[°C]			[min]	[min]
80	80	-5/+43	2,83(*)	A+	255' (4h:10')(*)	104' (1 h: 44')(**)
110	102,5		2,60(*)	A+	377' (6h:17')(*)	142' (2 h: 22')(**)

(*) Data obtained under the following conditions: T air 20 °C - T water from 10 °C to 55 °C, according to EN 16147
(*) Data obtained under the following conditions: T air 20 °C - T water from 15 °C to 55 °C, according to EN 16147

HEAT PUMP TECHNICAL DATA								
Power supply	Output	Maximum absorption (heat pump+electric immersion heater)	Max water temperature [°C]		Coolant	Coolant Pressure	Max ducts length	Acoustic level
			heat pump	heat pump+electric immersion heater				
[V / Ph / Hz]	[W]	[W]			[type]	[g]	[mm]	[dB]
220-240 / 1 / 50	1000	430 (+1500)	60	80	R134a	500	125	55 (*)

(*) test conformi a EN 12102:2013 - EN ISO 3741:2010

P.E.D. product designed and produced in conformity to the article 4.3 of directive 2014/68/UE - ErP Ecodesgin directive 2009/125/CE

BOLLYTERM® **HOME**

WALL HANGING WATER HEATER WITH INTEGRATED HEAT PUMP

STORAGE	
Pmax	Tmax
10 bar	90 °C

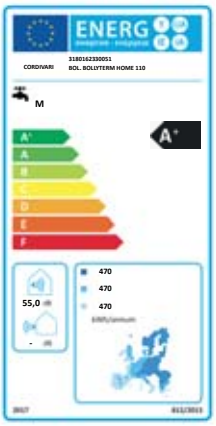

CORDIVARI Lab

TÜV Rheinland Energie und Umwelt GmbH states that test procedures and Cordivari LAB are certified conforming to European standard EN 15332, as indicated by Ecodesign ErP Directive.

TESTED ErP

Dipartimento di ingegneria industriale e scienze
Università Politecnica delle Marche

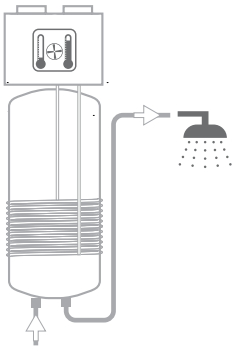

BOLLYTERM® HEAT PUMP WATER HEATERS

1	Domestic hot water circuit outlet 1/2" M
2	Drain/Condensate
3	Domestic cold water circuit inlet 1/2" M

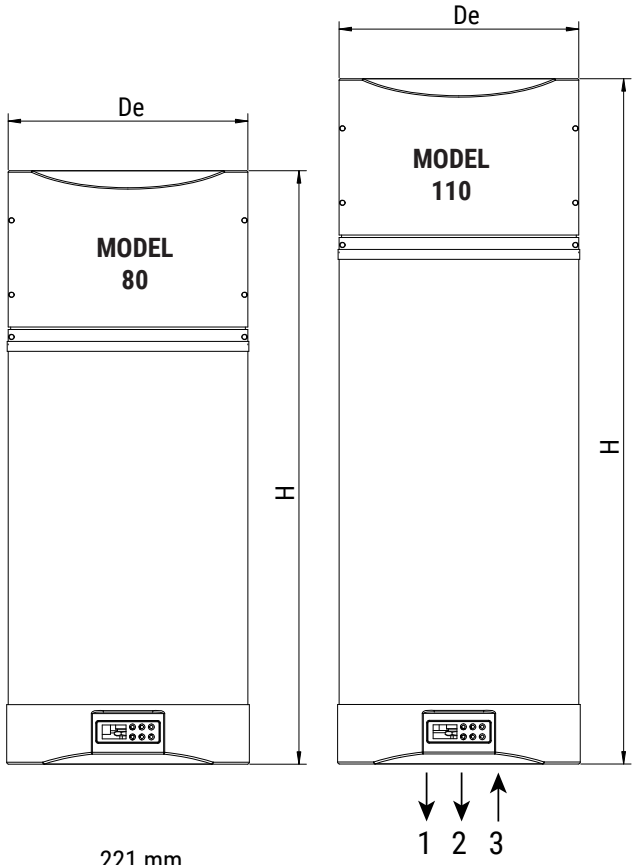

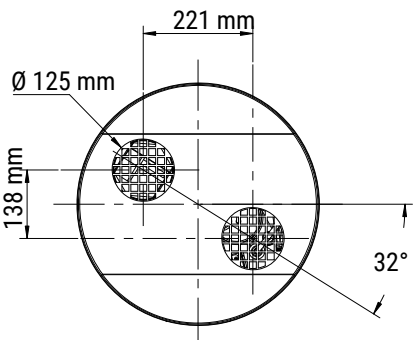

Model	Volume	De	H
	[lt]	[mm]	
80	80	483	1208
110	102,5	483	1392

CANALIZATION EXAMPLES

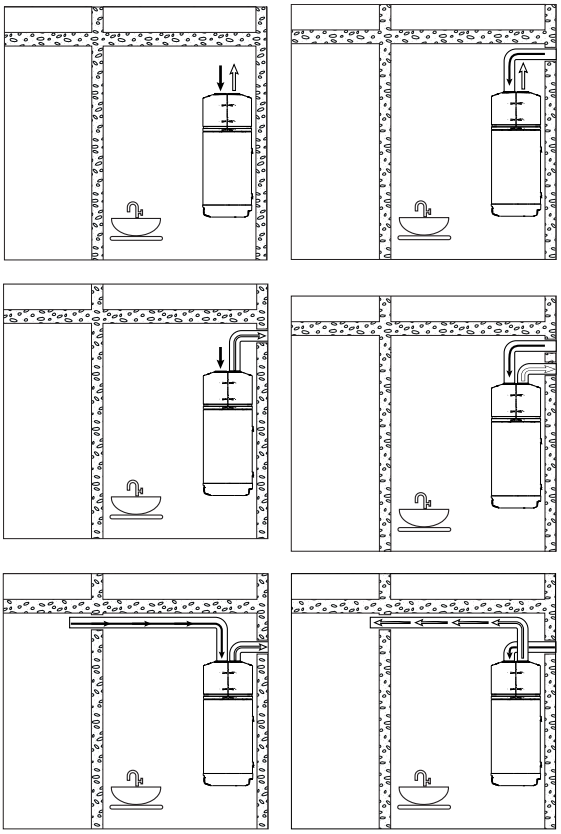

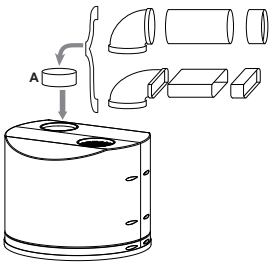

See ACCESSORIES section for complete elements range for canalization.

P.E.D. product designed and produced in conformity to the article 4.3 of directive 2014/68/UE - ErP Ecodesgin directive 2009/125/CE

CORDIVARI



PLASTIC ELEMENTS FOR CANALIZATION

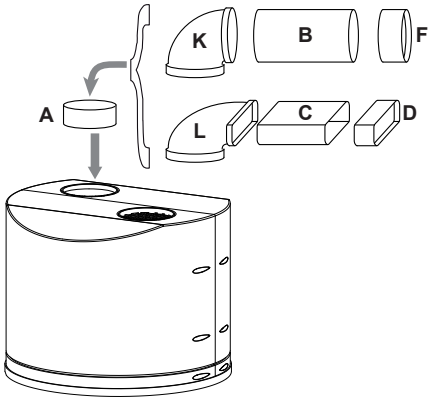

		Art. Nr.	Description
	A	5221000000085	Stub pipe of Ø 125 mm Length 75 mm
	B	5221000000086	Tube of Ø 125 Mm Length 1200 mm
	C	5221000000087	Rectangular tube of Ø 150x70 mm Length 1200 mm
	D	5221000000088	Rectangular plastic joint Ø 150x70 mm
		5221000000089	Horizontal joint from round pipe of Ø125 mm Rectangular Ø 150x70 mm
	F	5221000000090	Round joint Ø 125 mm
		5221000000091	Flexible tube Ø 125 mm Length 1000 mm
		5221000000092	Flexible rectangular tube Ø 150x70 mm Length 1000 mm
		5221000000093	Rectangular curve Ø 150x70 mm horizontal

		Art. Nr.	Description
		5221000000094	Rectangular curve Ø 150x70 mm vertical
	K	5221000000095	Round elbow curve Ø125 mm
	L	5221000000096	Vertical curve from round Ø 125 mm to rectangular Ø 150x70 mm
		5221000000097	Pair of pipe clamps Ø 150 mm
		5221000000098	Pair of brackets for rectangular tubes Ø 150x70 mm
		5221000000099	Plastic grid with fixed fins for tubes of Ø 125 mm
		5221000000100	Roll of adhesive white tape for tubes, width 50 x length 10 mt
		5221000000101	Plastic pipe flange for tubes of Ø 125 mm



CANALIZATION EXAMPLES

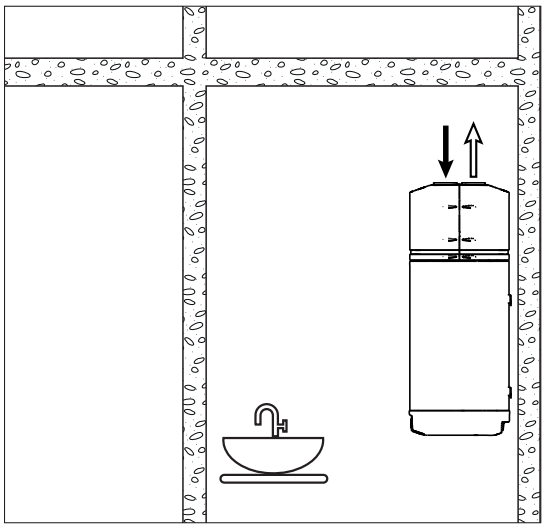

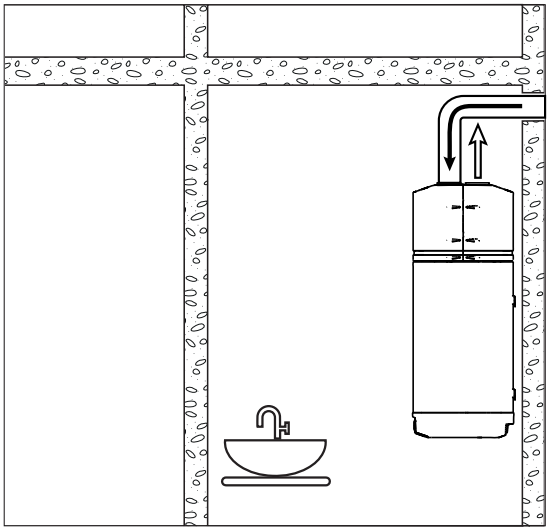

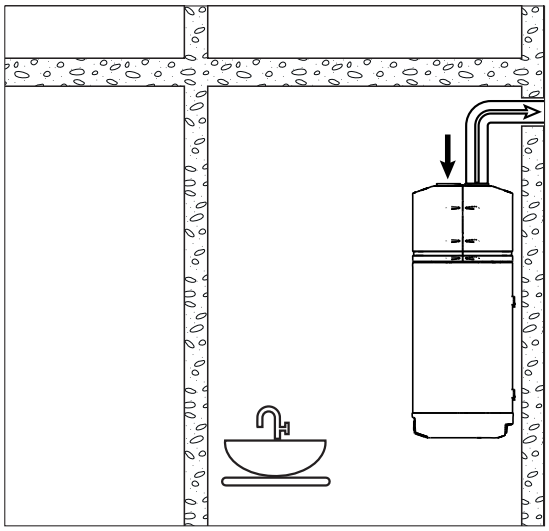

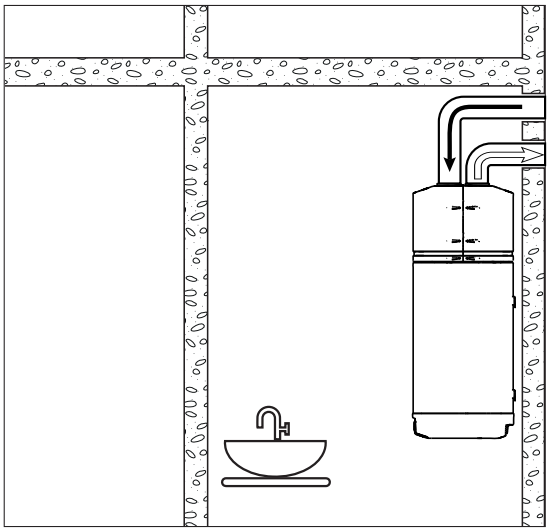

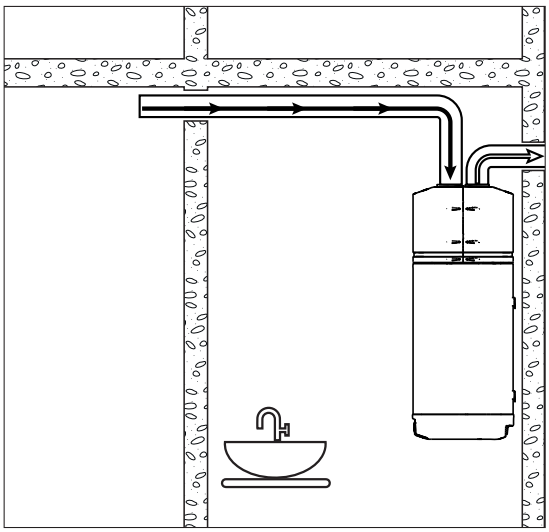

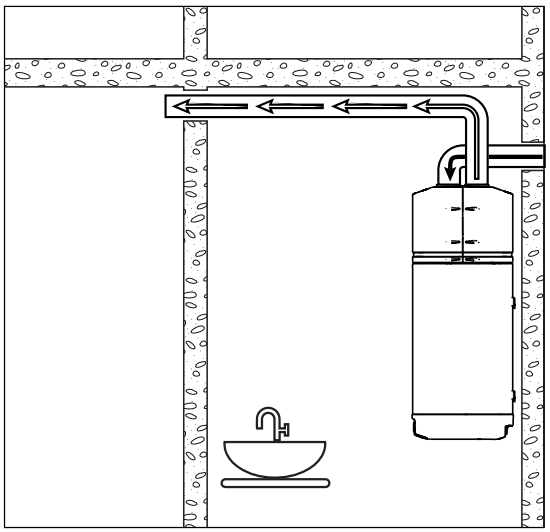



CALORIFIERS IN STAINLESS STEEL

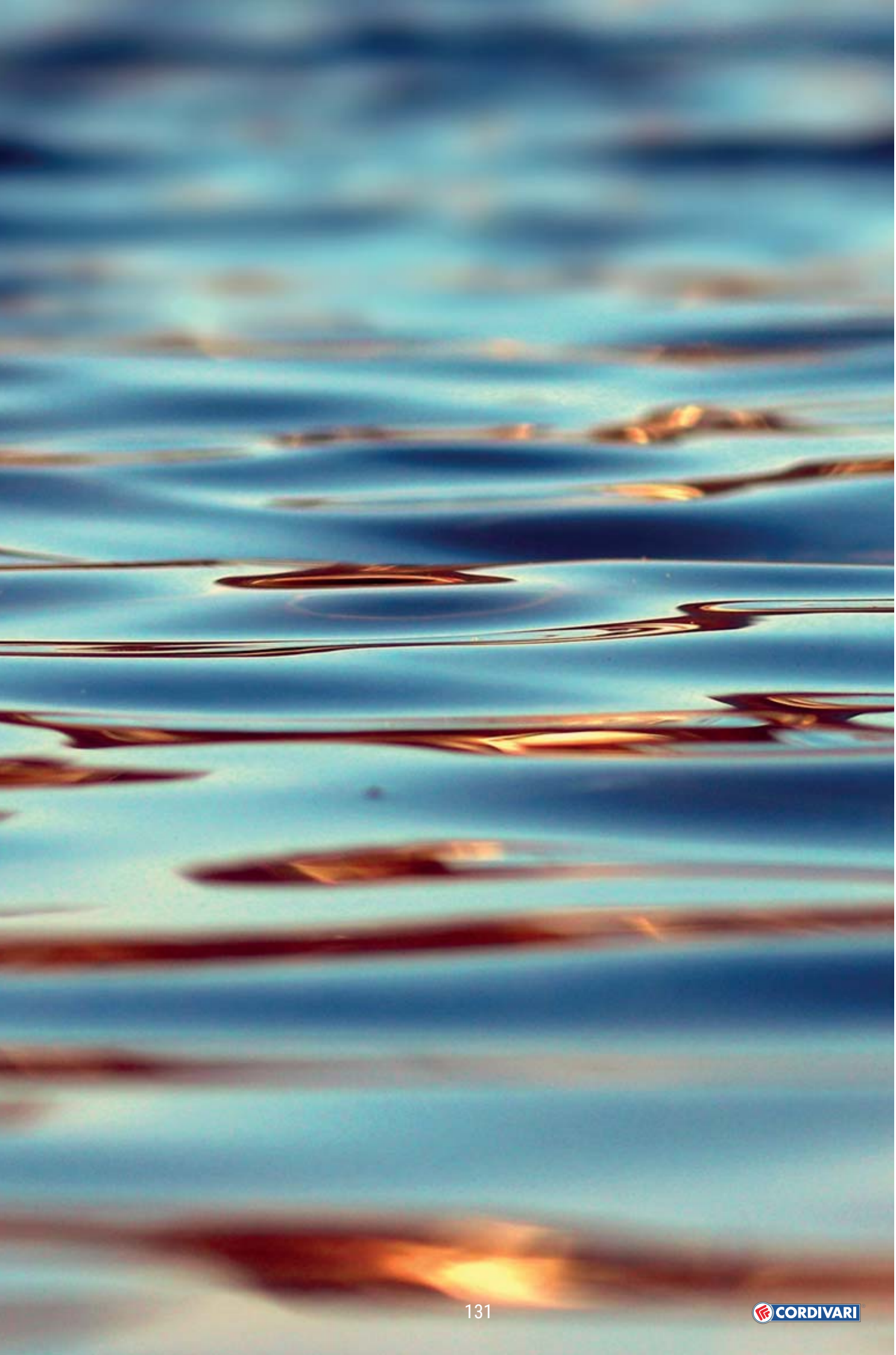

EXTRA **1 INOX**

STAINLESS STEEL 316L CALORIFIER WITH 1 STAINLESS STEEL EXTRACTABLE HEAT EXCHANGER



APPLICATION
Production and storage of domestic hot water (DHW).
MATERIAL
Stainless Steel 316 L suitable for domestic hot water
HEAT EXCHANGER
Stainless steel 316L Antilegionella® heat exchanger, with tubes bent to the bottom
INSULATION
- HARD: High thermal insulation with ecological polyurethane hard foam.
- SOFT: NOFIRE® polyester fleece 100% made of recyclable material, with high thermal insulation. Fire resistance class B-s2d0 according to EN 13501.

Grey PVC external lining.

CATHODE PROTECTION
Magnesium anode - Models > 1500 n° 2 magnesium anodes.
DRAIN
External confluence through drain connection.
GASKET- FLANGE PLATE
Silicone gaskets suitable for water intended for human consumption (tested according to 98/83/CE), max temperature up to 200°C. Mild steel exchanger head with anticorrosion treatment.
WARRANTY
5 years - See general sales conditions and warranty
ACCESSORIES AND SPARE PARTS
See Accessories section for the entire list.

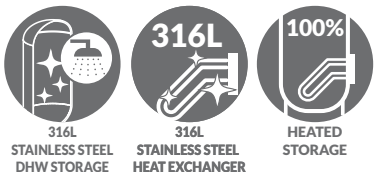

316L STAINLESS STEEL DHW STORAGE
316L STAINLESS STEEL HEAT EXCHANGER
HEATED STORAGE

EXTRA 1 XXB

Model	HARD FOAM insulation Art. Nr.	HEAT EXCHANGER SURFACE [m²]	ENERGY EFFICIENCY CLASS
200	3072052300422	0,5	**B**
300	3072052300423	0,75	**C**
500	3072052300424	1	**C**



cordivari.com/erp



On line ErP label tool

EXTRA 1 XXC

Model	DISMOUNTABLE SOFT FLEECE insulation Art. Nr.	HEAT EXCHANGER SURFACE [m²]	ENERGY EFFICIENCY CLASS
800	3072052300430	1,5	**C**
1000	3072052300431	2	**C**
1300	3072052300432	3	**C**
1500	3072052300433	3	**C**
2000	3072052300434	4	**C**
2500	3072052300410	5	
3000	3072052300412	6	
4000	3072052300414	8	
5000	3072052300416	10	

ACCESSORIES

ELECTRIC IMMERSION HEATERS

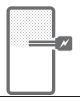

Mod.	Heated volume by electric immersion heater [lt]	MONOPHASE 1,5 kW	MONOPHASE 2 kW	MONOPHASE 3 kW	THREEPHASE 4 kW	THREEPHASE 5 kW	THREEPHASE 6 kW	THREEPHASE 9 kW	THREEPHASE 12 kW
		5240000000051	5240000000052	5240000000053	5240000000047	5240000000048	5240000000049	5240000000050	5240000000031
		Ignition time from 10 °C to 45 °C with electric immersion heaters [min]			Ignition time from 10 °C to 45 °C with electric immersion heaters [min]				
200	49	87	65	44	//	//	//	//	//
300	76	136	102	68	//	//	//	//	//
500	127	228	171	114	//	//	//	//	//
800	178	318	239	159	//	//	//	//	//
1000	243	436	327	218	163	131	109	73	54
1500	288	516	387	258	194	155	129	86	65
2000	443	793	595	396	297	238	198	132	99
2500	577	1033	775	517	387	310	258	172	129
3000	577	1033	775	517	387	310	258	172	129
4000	797	1428	1071	714	535	428	357	238	178
5000	1040	1864	1398	932	699	559	466	311	233

"Easy Control" Electronic Display-mounted on tank

ART. NR.	FOR MODELS
5005000310002	XXC
5005000310003	XXB



Titanium electronic anode (for stainless steel calorifiers)

See Accessories section



P.E.D. product designed and produced in conformity to the article 4.3 of directive 2014/68/UE - ErP Ecodesgin directive 2009/125/CE

EXTRA **1 INOX**

STAINLESS STEEL 316L CALORIFIER WITH 1 STAINLESS STEEL EXTRACTABLE HEAT EXCHANGER

STORAGE		HEAT EXCHANGER	
Pmax	Tmax	Pmax	Tmax
6 bar	95 °C	12 bar	110 °C

CORDIVARI Lab

TÜV Rheinland Energie und Umwelt GmbH states that test procedures and Cordivari LAB are certified conforming to European standard EN 15332, as indicated by Ecodesign ErP Directive.

TESTED ErP

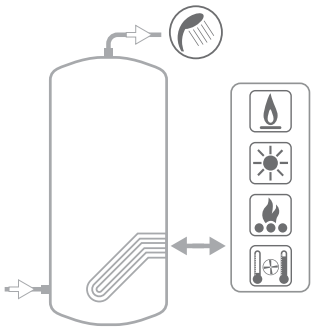

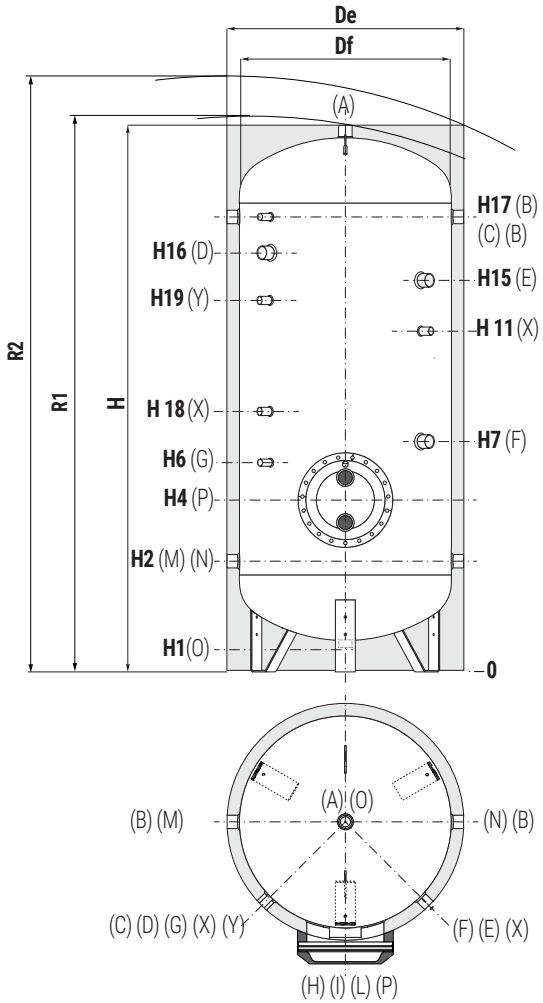

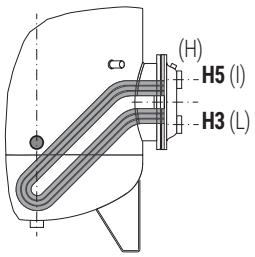

A	Domestic hot water outlet
B	Recirculation / Domestic hot water outlet
C	Connection for instrumentation 1/2" F
D	Connection for electric immersion heater
E	Connection for 2nd magnesium anode 1"1/4 F (only for models > 1500)
F	Connection for magnesium anode/Titanium electronic anode 1" 1/4 F
G	Connection for instrumentation 1/2" F
M	Domestic cold water circuit inlet
N	Alternative domestic cold water circuit inlet or connection for more boilers
L	Primary circuit outlet
I	Primary circuit inlet
O	Drain. For model 1000 connection 1"1/2 F. For models > 1000 1" F
P	Flange
H	Heat exchanger drain 3/8" F
X	Connection for titanium electronic anode 3/4" F (>1300)
Y	Connection for titanium electronic anode 3/4" F (>3000)

Model	Volume	Df (vers. XXC)	De (vers. XXC)	De (vers. XXB)	H	R1	R2	H1	H2	H3	H4	H5	H6
	[lt]	[mm]			[mm]								
200	192	//	//	550	1451	1552	//	81	316	351	401	451	511
300	294	//	//	650	1569	1698	//	149	409	444	494	544	604
500	504	//	//	750	1861	2006	//	141	426	461	511	561	621
800	762	790	1010	//	1943	2008	2200	113	428	473	563	653	713
1000	905	800	1020	//	2212	2270	2450	112	437	482	572	662	722
1300	1277	950	1210	//	2193	2275	2510	118	433	578	668	758	818
1500	1403	1000	1260	//	2177	2266	2530	112	447	592	682	772	832
2000	2024	1250	1510	//	2099	2231	2600	134	529	649	754	859	929
2500	2320	1250	1350	//	2299	2396	2680	134	529	649	754	859	929
3000	2925	1250	1350	//	2799	2879	3120	134	529	709	814	919	989
4000	3776	1400	1500	//	2872	2968	3250	117	557	737	842	947	1017
5000	4995	1600	1700	//	2909	3031	3380	94	564	734	839	944	1014

Model	H7	H11	H15	H16	H17	H18	H19	P	O	B M N	L I	D	A
									Connections F				
200	701	//	//	1066	1176	//	//	Øi220/Øe300	3/4"	1"1/4	1"	1"1/2	1"1/4
300	794	//	//	1159	1269	//	//	Øi220/Øe300	3/4"	1"1/4	1"	1"1/2	1"1/4
500	811	//	//	1380	1536	//	//	Øi220/Øe300	3/4"	1"1/4	1"	1"1/2	1"1/4
800	863	//	//	1382	1538	//	//	Øi300/Øe380	3/4"	1"1/4	2"	1"1/2	1"1/2
1000	922	//	//	1642	1797	//	//	Øi300/Øe380	3/4"	1"1/2	2"	2"	1"1/2
1300	918	//	//	1638	1793	//	//	Øi300/Øe380	1"	1"1/2	2"	2"	2"
1500	982	//	1552	1602	1757	//	//	Øi300/Øe380	1"	1"1/2	2"	2"	2"
2000	1004	//	1524	1473	1629	1159	//	Øi300/Øe380	1"	2"	2"	2"	2"
2500	954	1529	1794	1710	1879	1179	//	Øi350/Øe430	1"	2"	2"	2"	2"
3000	1014	1629	2294	2210	2369	1279	//	Øi350/Øe430	1"	2"	2"	2"	2"
4000	1022	1657	2302	2225	2397	1307	2090	Øi350/Øe430	1"	2"	2"	2"	2"
5000	1019	1664	2319	2159	2404	1314	2024	Øi350/Øe430	1"	2"	2"	2"	2"

P.E.D. product designed and produced in conformity to the article 4.3 of directive 2014/68/UE - ErP Ecodesgin directive 2009/125/CE

CORDIVARI

EXTRA **2 INOX**

STAINLESS STEEL 316L CALORIFIER WITH 2 STAINLESS STEEL EXTRACTABLE HEAT EXCHANGERS



APPLICATION
Production and storage of domestic hot water (DHW).
MATERIAL
Stainless Steel 316 L suitable for domestic hot water
HEAT EXCHANGER
N° 2 Stainless steel 316L Antilegionella® heat exchangers (upper exchanger is straight and the lower is bent to the bottom).
INSULATION
- HARD: High thermal insulation with ecological polyurethane hard foam.
- SOFT: NOFIRE® polyester fleece 100% made of recyclable material, with high thermal insulation. Fire resistance class B-s2d0 according to EN 13501. Grey PVC external lining.

CATHODE PROTECTION
Magnesium anode - Models > 1500 n° 2 magnesium anodes.
DRAIN
External confluence through drain connection.
GASKET- FLANGE PLATE
Silicone gaskets suitable for water intended for human consumption (tested according to 98/83/CE), max temperature up to 200°C. Mild steel exchanger head with anticorrosion treatment.
WARRANTY
5 years - See general sales conditions and warranty
ACCESSORIES AND SPARE PARTS
See Accessories section for the entire list.

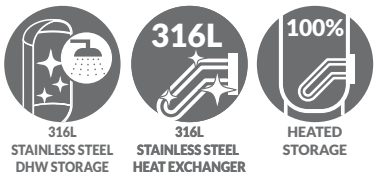

316L STAINLESS STEEL DHW STORAGE
316L STAINLESS STEEL HEAT EXCHANGER
HEATED STORAGE

EXTRA 2 XXB

Model	HARD FOAM insulation	HEAT EXCHANGER SURFACE Lower	Upper	ENERGY EFFICIENCY CLASS
	Art. Nr.	[m²]		
200	3082052300222	0,5	0,5	**B**
300	3082052300223	0,75	0,75	**C**
500	3082052300224	1,5	1,5	**C**



cordivari.com/erp



On line ErP label tool

EXTRA 2 XXC

Model	DISMOUNTABLE SOFT FLEECE insulation	HEAT EXCHANGER SURFACE Lower	Upper	ENERGY EFFICIENCY CLASS
	Art. Nr.	[m²]		
800	3082052300230	2	2	**C**
1000	3082052300231	3	2	**C**
1300	3082052300232	3	3	**C**
1500	3082052300233	3	3	**C**
2000	3082052300234	4	4	**C**
2500	3082052300210	5	5	
3000	3082052300212	6	6	
4000	3082052300214	8	8	
5000	3082052300216	10	10	

ACCESSORIES

ELECTRIC IMMERSION HEATERS



Mod.	Heated volume by electric immersion heater [lt]	MONOPHASE 1,5 kW	2 kW	3 kW	THREEPHASE 4 kW	5 kW	6 kW	9 kW	12 kW
		5240000000051	5240000000052	5240000000053	5240000000047	5240000000048	5240000000049	5240000000050	5240000000031
		Ignition time from 10 °C to 45 °C with electric immersion heaters [min]			Ignition time from 10 °C to 45 °C with electric immersion heaters [min]				
200	49	87	65	44	//	//	//	//	//
300	76	136	102	68	//	//	//	//	//
500	127	228	171	114	//	//	//	//	//
800	178	318	239	159	//	//	//	//	//
1000	243	436	327	218	163	131	109	73	54
1500	288	516	387	258	194	155	129	86	65
2000	443	793	595	396	297	238	198	132	99
2500	577	1033	775	517	387	310	258	172	129
3000	577	1033	775	517	387	310	258	172	129
4000	797	1428	1071	714	535	428	357	238	178
5000	1040	1864	1398	932	699	559	466	311	233

"Easy Control" Electronic Display-mounted on tank

ART. NR.	FOR MODELS
5005000310002	XXC
5005000310003	XXB



Titanium electronic anode (for stainless steel calorifiers)

See Accessories section



P.E.D. product designed and produced in conformity to the article 4.3 of directive 2014/68/UE - ErP Ecodesgin directive 2009/125/CE

EXTRA **2 INOX**

STAINLESS STEEL 316L CALORIFIER WITH 2 STAINLESS STEEL EXTRACTABLE HEAT EXCHANGERS

STORAGE		HEAT EXCHANGER	
Pmax	Tmax	Pmax	Tmax
6 bar	95 °C	12 bar	110 °C

CORDIVARI Lab

TÜV Rheinland Energie und Umwelt GmbH states that test procedures and Cordivari LAB are certified conforming to European standard EN 15332, as indicated by Ecodesign ErP Directive.

TESTED ErP

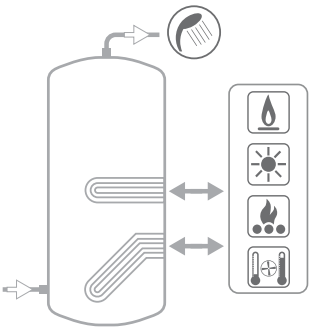

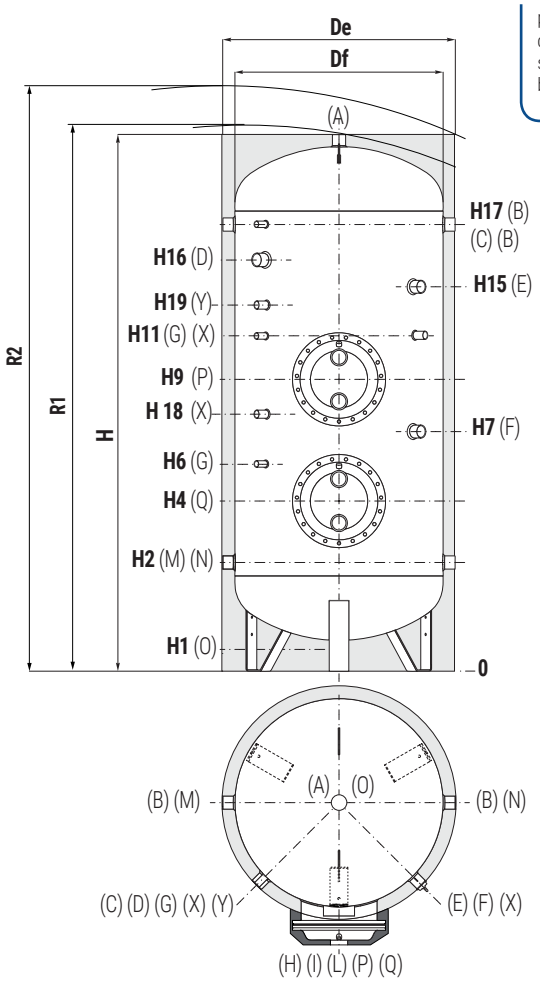

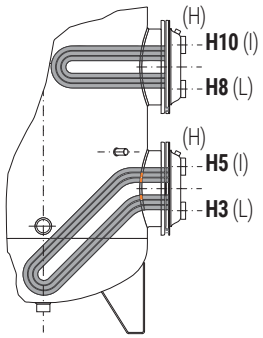

Models with 3 extractable heat exchangers available upon request

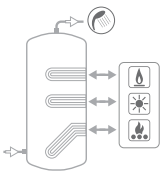

A	Domestic hot water outlet
B	Recirculation / Domestic hot water outlet 2" F
C	Connection for instrumentation 1/2" F
D	Connection for electric immersion heater
E	Connection for 2nd magnesium anode/Titanium electronic anode 1"1/4 F (only for models > 1500)
F	Connection for magnesium anode/Titanium electronic anode 1" 1/4 F
G	Connection for instrumentation 1/2" F
M	Domestic cold water circuit inlet
N	Alternative domestic cold water circuit inlet or connection for more boilers
L	Primary circuit outlet
I	Primary circuit inlet
O	Drain. For model 1000 connection 1"1/2 F. For models > 1000 1" F
P	Flange
H	Heat exchanger drain 3/8" F
X	Connection for titanium electronic anode 3/4" F (>1300)
Y	Connection for titanium electronic anode 3/4" F (>2500)

Model	Volume	Df (vers. XXC)	De (vers. XXC)	De (vers. XXB)	H	R1	R2	H1	H2	H3	H4	H5	H6	H7	H8	H9
	[lt]	[mm]			[mm]											
200	195	//	//	550	1451	-	1560	81	316	351	401	451	511	701	801	851
300	297	//	//	650	1569	-	1700	149	409	444	494	544	604	794	894	944
500	507	//	//	750	1861	-	2010	141	426	461	511	561	621	811	911	961
800	768	790	1010	//	1943	2008	2190	113	428	473	563	653	713	863	1003	1093
1000	910	800	1020	//	2212	2270	2440	112	437	482	572	662	722	922	1032	1122
1300	1283	950	1210	//	2193	2275	2510	118	433	578	668	758	818	918	1078	1168
1500	1409	1000	1260	//	2177	2266	2520	112	447	592	682	772	832	982	1142	1232
2000	2032	1250	1510	//	2099	2231	2590	134	529	649	754	859	929	1004	1229	1334
2500	2320	1250	1350	//	2299	2396	2670	134	529	649	754	859	929	954	1249	1354
3000	2925	1250	1350	//	2799	2879	3110	134	529	709	814	919	989	1014	1349	1454
4000	3776	1400	1500	//	2872	2968	3250	117	557	737	842	947	1017	1022	1377	1482
5000	4995	1600	1700	//	2909	3031	3370	94	564	734	839	944	1014	1019	1384	1489

Model	H10	H11	H12	H15	H16	H17	H18	H19	Q P	O	B M N	I L	D	A
	[mm]									Connections F				
200	901	961	//	//	1066	1176	//	//	Øi220/Øe300	3/4"	1"1/4	1"	1"1/2	1"1/4
300	994	1054	//	//	1159	1269	//	//	Øi220/Øe300	3/4"	1"1/4	1"	1"1/2	1"1/4
500	1011	1071	//	//	1380	1536	//	//	Øi220/Øe300	3/4"	1"1/4	1"	1"1/2	1"1/4
800	1183	1243	//	//	1382	1538	//	//	Øi300/Øe380	3/4"	1"1/4	2"	1"1/2	1"1/2
1000	1212	1272	//	//	1642	1797	//	//	Øi300/Øe380	3/4"	1"1/2	2"	2"	1"1/2
1300	1258	1318	//	//	1638	1793	//	//	Øi300/Øe380	1"	1"1/2	2"	2"	2"
1500	1322	1382	//	1552	1602	1757	1057	//	Øi300/Øe380	1"	1"1/2	2"	2"	2"
2000	1439	1404	//	1524	1473	1629	1159	//	Øi350/Øe430	1"	2"	2"	2"	2"
2500	1459	1529	//	1794	1710	1879	1179	//	Øi350/Øe430	1"	2"	2"	2"	2"
3000	1559	1629	//	2294	2210	2369	1279	2075	Øi350/Øe430	1"	2"	2"	2"	2"
4000	1587	1657	1980	2302	2225	2397	1307	2090	Øi350/Øe430	1"	2"	2"	2"	2"
5000	1594	1664	1992	2319	2159	2404	1314	2024	Øi350/Øe430	1"	2"	2"	2"	2"

P.E.D. product designed and produced in conformity to the article 4.3 of directive 2014/68/UE - ErP Ecodesgin directive 2009/125/CE

EXTRA **1 INOX COMPACT**

STAINLESS STEEL 316L CALORIFIER WITH 1 STAINLESS STEEL EXTRACTABLE HEAT EXCHANGER SUITABLE FOR LOW-CEILINGED ROOM



APPLICATION
Production and storage of domestic hot water (DHW). Suitable for low-ceilinged room.
MATERIAL
Stainless Steel 316 L suitable for domestic hot water
HEAT EXCHANGER
Stainless steel 316L Antilegionella® heat exchanger, with tubes bent to the bottom
INSULATION (DISMOUNTABLE)
NOFIRE® polyester fleece 100% made of recyclable material, with high thermal insulation. Fire resistance class B-s2d0 according to EN 13501.
Grey PVC external lining.

CATHODE PROTECTION
N° 2 magnesium anodes.
DRAIN
External confluence through drain connection.
GASKET- FLANGE PLATE
Silicone gaskets suitable for water intended for human consumption (tested according to 98/83/CE), max temperature up to 200°C. Mild steel exchanger head with anticorrosion treatment.
WARRANTY
5 years - See general sales conditions and warranty
ACCESSORIES AND SPARE PARTS
See Accessories section for the entire list.

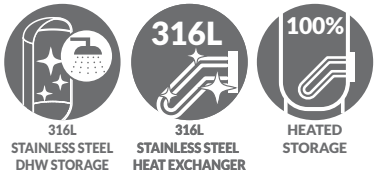



EXTRA 1 COMPACT XXC

Model	DISMOUNTABLE SOFT FLEECE insulation	HEAT EXCHANGER SURFACE
	Art. Nr.	[m²]
2500	3072052300411	5
3000	3072052300413	6
4000	3072052300415	8



cordivari.com/erp



On line ErP label tool

ACCESSORIES

ELECTRIC IMMERSION HEATERS



Mod.	Heated volume by electric immersion heater [lt]	MONOPHASE 1,5 kW	2 kW	3 kW	THREEPHASE 4 kW	5 kW	6 kW	9 kW	12 kW
		5240000000051	5240000000052	5240000000053	5240000000047	5240000000048	5240000000049	5240000000050	5240000000031
		Ignition time from 10 °C to 45 °C with electric immersion heaters [min]			Ignition time from 10 °C to 45 °C with electric immersion heaters [min]				
2500	797	1428	1071	714	535	428	357	238	178
3000	874	1565	1173	782	587	469	391	261	196
4000	924	1655	1241	828	621	497	414	276	207

"Easy Control" Electronic Display-mounted on tank

ART. NR.	
5005000310002	

Thermometer

Art. Nr.	
5032240000107	
5 units box	

Titanium electronic anode (for stainless steel calorifiers)

See Accessories section	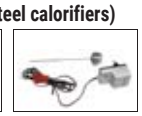

P.E.D. product designed and produced in conformity to the article 4.3 of directive 2014/68/UE - ErP Ecodesgin directive 2009/125/CE

EXTRA **1 INOX COMPACT**

STAINLESS STEEL 316L CALORIFIER WITH 1 STAINLESS STEEL EXTRACTABLE HEAT EXCHANGER SUITABLE FOR LOW-CEILINGED ROOM

STORAGE		HEAT EXCHANGER	
Pmax	Tmax	Pmax	Tmax
6 bar	95 °C	12 bar	110 °C

CORDIVARI Lab

TÜV Rheinland Energie und Umwelt GmbH states that test procedures and Cordivari LAB are certified conforming to European standard EN 15332, as indicated by Ecodesign ErP Directive.

TESTED ErP

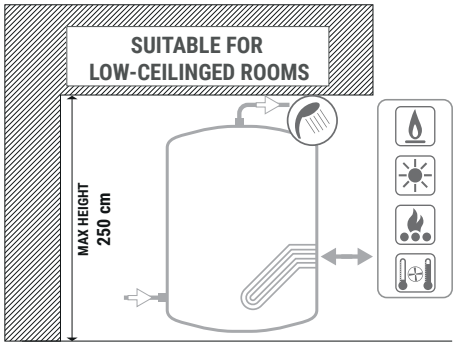

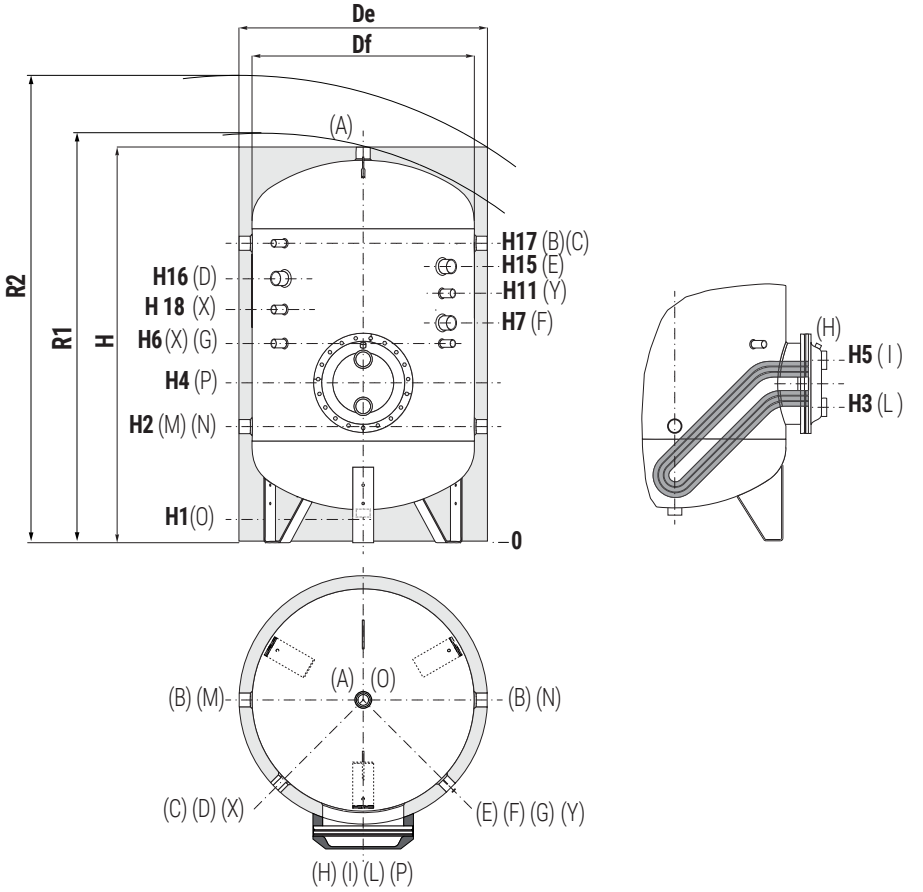

A	Domestic hot water outlet 2" F
B	Recirculation / Domestic hot water outlet 2" F
C	Connection for instrumentation 1/2" F
D	Connection for electric immersion heater 2" F
E	Connection for 2nd magnesium anode/Titanium electronic anode 1"1/4 F
F	Connection for magnesium anode/Titanium electronic anode 1" 1/4 F
G	Connection for instrumentation 1/2" F
M	Domestic cold water circuit inlet 2" F
N	Alternative domestic cold water circuit inlet or connection for more boilers 2" F
L	Primary circuit outlet 2" F
I	Primary circuit inlet 2" F
O	Drain 1" F
P	Flange
H	Heat exchanger drain 3/8" F
X	Connection for titanium electronic anode 3/4" F
Y	Connection for titanium electronic anode 3/4" F (solo 4000)

Model	Volume	Df	De	H	R1	R2	H1	H2	H3
	[lt]	[mm]							
2500	2627	1400	1500	2122	2251	2610	117	557	677
3000	3029	1500	1600	2131	2276	2670	106	556	736
4000	3990	1600	1700	2409	2555	2960	94	564	744

Model	H4	H5	H6	H7	H11	H15	H16	H17	H18	P
	[mm]									
2500	782	887	957	1077	//	1552	1501	1657	1180	Øi350/Øe430
3000	841	946	956	1076	//	1551	1500	1656	1180	Øi350/Øe430
4000	849	954	1024	1144	1611	1809	1732	1904	1250	Øi350/Øe430

P.E.D. product designed and produced in conformity to the article 4.3 of directive 2014/68/UE - ErP Ecodesgin directive 2009/125/CE

CORDIVARI

EXTRA **2 INOX COMPACT**

STAINLESS STEEL 316L CALORIFIER WITH 2 STAINLESS STEEL EXTRACTABLE HEAT EXCHANGERS SUITABLE FOR LOW-CEILINGED ROOMS



APPLICATION
Production and storage of domestic hot water (DHW). Suitable for low-ceilinged room.
MATERIAL
Stainless Steel 316 L suitable for domestic hot water
HEAT EXCHANGER
N° 2 Stainless steel 316L Antilegionella® heat exchangers (upper exchanger is straight and the lower is bent to the bottom).
INSULATION (DISMOUNTABLE)
NOFIRE® polyester fleece 100% made of recyclable material, with high thermal insulation. Fire resistance class B-s2d0 according to EN 13501. Grey PVC external lining.

CATHODE PROTECTION
N° 2 magnesium anodes.
DRAIN
External confluence through drain connection.
GASKET- FLANGE PLATE
Silicone gaskets suitable for water intended for human consumption (tested according to 98/83/CE), max temperature up to 200°C. Mild steel exchanger head with anticorrosion treatment.
WARRANTY
5 years - See general sales conditions and warranty
ACCESSORIES AND SPARE PARTS
See Accessories section for the entire list.

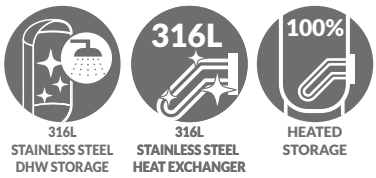



cordivari.com/erp



On line ErP label tool



EXTRA 2 COMPACT XXC

Model	DISMOUNTABLE SOFT FLEECE insulation	HEAT EXCHANGER SURFACE Lower	Upper
	Art. Nr.	[m²]	
2500	3082052300211	5	5
3000	3082052300213	6	6
4000	3082052300215	8	8

ACCESSORIES

ELECTRIC IMMERSION HEATERS



Mod.	Heated volume by electric immersion heater [lt]	MONOPHASE **1,5** kW	**2** kW	**3** kW	THREEPHASE **4** kW	**5** kW	**6** kW	**9** kW	**12** kW
		5240000000051	5240000000052	5240000000053	5240000000047	5240000000048	5240000000049	5240000000050	5240000000031
		Ignition time from 10 °C to 45 °C with electric immersion heaters [min]			Ignition time from 10 °C to 45 °C with electric immersion heaters [min]				
2500	797	1428	1071	714	535	428	357	238	178
3000	874	1565	1173	782	587	469	391	261	196
4000	924	1655	1241	828	621	497	414	276	207

"Easy Control" Electronic Display-mounted on tank

ART. NR.	FOR MODELS
5005000310002	XXC



Thermometer

Art. Nr.
5032240000107
5 units box



Titanium electronic anode (for stainless steel calorifiers)

See Accessories section

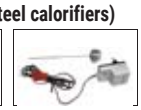

P.E.D. product designed and produced in conformity to the article 4.3 of directive 2014/68/UE - ErP Ecodesgin directive 2009/125/CE

EXTRA **2 INOX COMPACT**

STAINLESS STEEL 316L CALORIFIER WITH 2 STAINLESS STEEL EXTRACTABLE HEAT EXCHANGERS SUITABLE FOR LOW-CEILINGED ROOMS

STORAGE		HEAT EXCHANGER	
Pmax	Tmax	Pmax	Tmax
6 bar	95 °C	12 bar	110 °C

CORDIVARI Lab

TÜV Rheinland Energie und Umwelt GmbH states that test procedures and Cordivari LAB are certified conforming to European standard EN 15332, as indicated by Ecodesign ErP Directive.

TESTED ErP

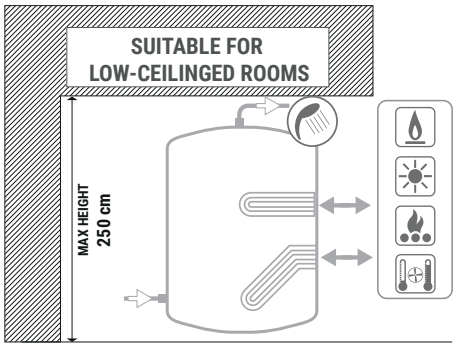

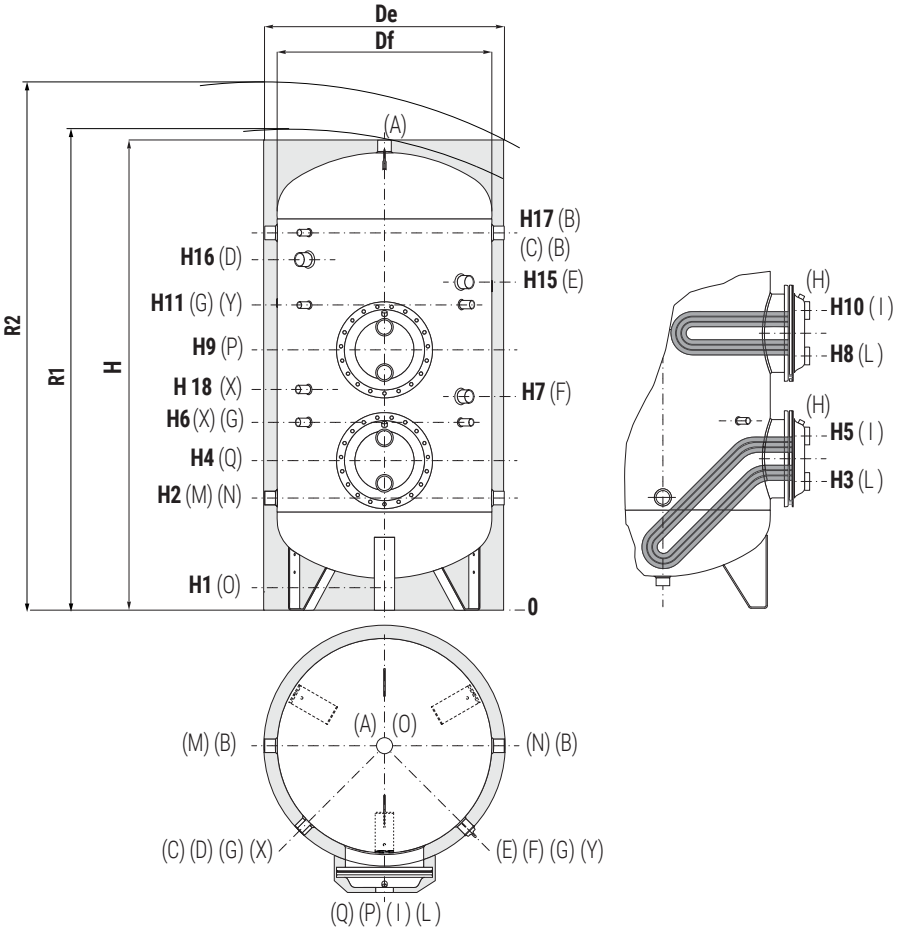

A	Domestic hot water outlet 2" F
B	Recirculation / Domestic hot water outlet 2" F
C	Connection for instrumentation 1/2" F
D	Connection for electric immersion heater 2" F
E	Connection for 2nd magnesium anode/Titanium electronic anode 1"1/4 F
F	Connection for magnesium anode/Titanium electronic anode 1" 1/4 F
G	Connection for instrumentation 1/2" F
M	Domestic cold water circuit inlet 2" F
N	Alternative domestic cold water circuit inlet or connection for more boilers 2" F
L	Primary circuit outlet 2" F
I	Primary circuit inlet 2" F
O	Drain 1" F
P	Flange
H	Heat exchanger drain 3/8" F
X	Connection for titanium electronic anode 3/4" F
Y	Connection for titanium electronic anode 3/4" F (solo 4000)

Model	Volume	Df	De	H	R1	R2	H1	H2	H3	H4	H5	H6	H7	H8	H9
	[lt]	[mm]													
2500	2635	1400	1500	2122	2251	2600	117	557	677	782	887	957	1077	1257	1362
3000	3038	1500	1600	2131	2276	//	106	556	736	841	946	956	1076	1256	1361
4000	4002	1600	1700	2409	2555	//	94	564	744	849	954	1024	1144	1331	1436

Model	H10	H11	H12	H15	H16	H17	H18	P Q
	[mm]							
2500	1537	1432	1177	1552	1501	1657	1180	Øi350/Øe430
3000	1466	1431	1176	1551	1500	1656	1180	Øi350/Øe430
4000	1716	1611	1251	1809	1732	1904	1250	Øi350/Øe430

P.E.D. product designed and produced in conformity to the article 4.3 of directive 2014/68/UE - ErP Ecodesgin directive 2009/125/CE

EXTRA **1 INOX VAPORE**

STAINLESS STEEL 316L CALORIFIERS WITH 1 EXTRACTABLE STAINLESS STEEL HEAT EXCHANGER FOR STEAM GENERATOR



APPLICATION
Production and storage of sanitary hot water. Suitable for steam generators.
MATERIAL
Stainless Steel 316 L suitable for domestic hot water
HEAT EXCHANGER
Stainless steel 316L straight heat exchanger suitable for steam power (P.E.D. directive compliant).I
INSULATION
- HARD: High thermal insulation with ecological polyurethane hard foam.
- SOFT: NOFIRE® polyester fleece 100% made of recyclable material, with high thermal insulation. Fire resistance class B-s2d0 according to EN 13501. Grey PVC external lining.

CATHODE PROTECTION
Magnesium anode. Models > 1500 n° 2 magnesium anodes.
DRAIN
External confluence through drain connection.
GASKET- FLANGE PLATE
Asbestos-free fiber gaskets.
Mild steel exchanger head with anticorrosion treatment.
WARRANTY
5 years - See general sales conditions and warranty
ACCESSORIES AND SPARE PARTS
See Accessories section for the entire list.

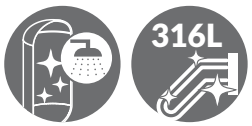

316L STAINLESS STEEL DHW STORAGE
316L STAINLESS STEEL HEAT EXCHANGER

EXTRA 1 VAPORE XXB

Model	HARD FOAM insulation	HEAT EXCHANGER SURFACE	ENERGY EFFICIENCY CLASS
	Art. Nr.	[m²]	
500	3069052300123	1	C



cordivari.com/erp



On line ErP label tool

EXTRA 1 VAPORE XXC

Model	DISMOUNTABLE SOFT FLEECE insulation	HEAT EXCHANGER SURFACE	ENERGY EFFICIENCY CLASS
	Art. Nr.	[m²]	
800	3069052300134	1,5	C
1000	3069052300135	2	C
1300	3069052300136	3	C
1500	3069052300137	3	C
2000	3069052300138	3	C
2500	3069052300109	3	
3000	3069052300111	3	
4000	3069052300113	4	
5000	3069052300115	5	

HEAT EXCHANGER FOR STEAM GENERATOR TECHNICAL DATA

Model	PED	Heat Exchangers performance calculated with primary circuit at 6 bar saturated steam and production of DHW from 10° to 45°C				Heat Exchangers performance calculated with primary circuit at 3 bar saturated steam and production of DHW from 10° to 45°C			
		Output	DHW production		Ignition time	Output	DHW production		Ignition time
		[KW]	[l/h]	[l/10']	[min]	[KW]	[l/h]	[l/10']	[min]
500	Art. 4.3	141	3464	1189	9	114	2793	1077	11
800	Cat. I	212	5196	1869	9	171	4189	1701	12
1000	Cat. I	282	6928	2463	9	227	5585	2239	11
1500	Cat. I	423	10393	3554	9	341	8378	3218	11
2000	Cat. I	423	10393	4228	12	341	8378	3892	15
2500	Cat. I	423	10393	4571	13	341	8378	4235	17
3000	Cat. I	423	10393	5438	17	341	8378	5102	22
4000	Cat. I	564	13857	7031	17	455	11171	6583	21
5000	Cat. I	705	17321	9097	17	568	13963	8537	22

ACCESSORIES

"Easy Control" Electronic Display-mounted on tank

ART. NR.	FOR MODELS
5005000310002	XXC
5005000310003	XXB



Thermometer

Art. Nr.
5032240000107
5 units box



Titanium electronic anode (for stainless steel calorifiers)

See Accessories section



P.E.D. product designed and produced in conformity to the article 4.3 of directive 2014/68/UE - ErP Ecodesgin directive 2009/125/CE

EXTRA **1 INOX VAPORE**

STAINLESS STEEL 316L CALORIFIERS WITH 1 EXTRACTABLE STAINLESS STEEL HEAT EXCHANGER FOR STEAM GENERATOR

STORAGE		HEAT EXCHANGER	
Pmax	Tmax	Pmax	Tmax
6 bar	95 °C	6 bar	165 °C

CORDIVARI Lab

TÜV Rheinland Energie und Umwelt GmbH states that test procedures and Cordivari LAB are certified conforming to European standard EN 15332, as indicated by Ecodesign ErP Directive.

TESTED ErP

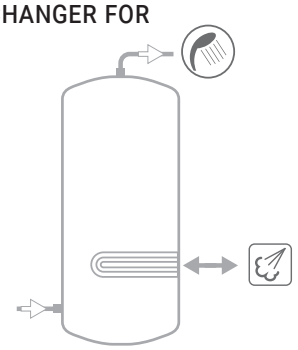

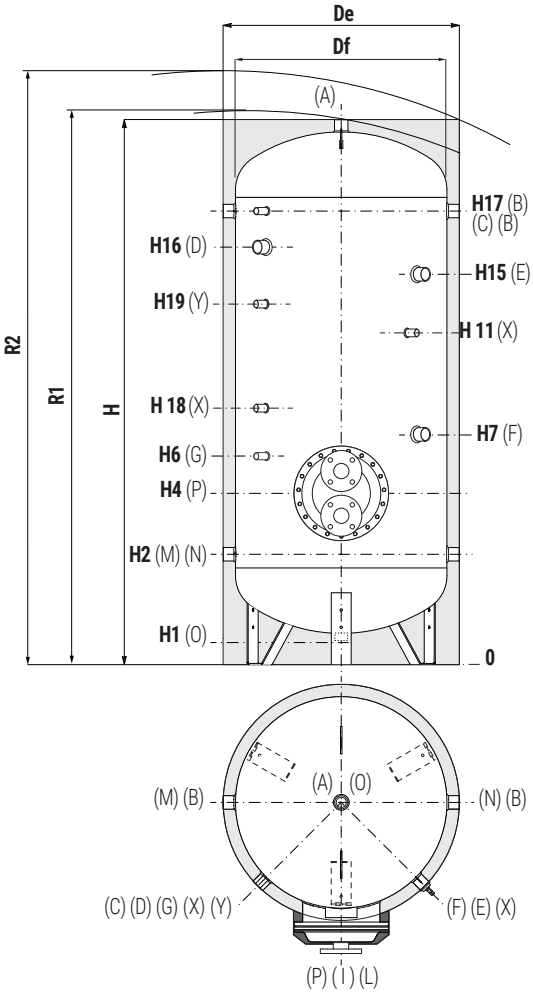

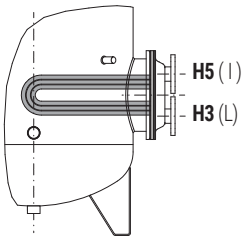

A	Domestic hot water outlet
B	Recirculation / Domestic hot water outlet
C	Connection for instrumentation 1/2" F
D	Connection for electric immersion heater
E	Connection for 2nd magnesium anode/Titanium electronic anode 1"1/4 F (only for models > 1500)
F	Connection for magnesium anode/Titanium electronic anode 1" 1/4 F
G	Connection for instrumentation 1/2" F
M	Domestic cold water circuit inlet
N	Alternative domestic cold water circuit inlet or connection for more boilers
L	Outlet for condense DN50 PN16
I	Steam circuit inlet DN50 PN16
O	Drain
P	Flange
X	Connection for titanium electronic anode 3/4" F (>1300)
Y	Connection for titanium electronic anode 3/4" F (>3000)

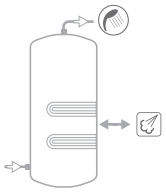

Models with 2 heat exchangers are available on request

Model	Volume	Df (vers. XXC)	De (vers. XXC)	De (vers. XXB)	H	R1	R2	H1	H2	H3	H4	H5	H6	H7
	[lt]	[mm]			[mm]									
500	504	//	//	750	1861	2006	2010	141	426	421	511	601	621	811
800	762	790	1010	//	1893	2008	2190	113	428	473	563	653	713	863
1000	905	800	1020	//	2212	2270	2440	112	437	482	572	662	722	922
1300	1277	950	1210	//	2193	2275	2510	118	433	478	568	658	718	918
1500	1403	1000	1260	//	2177	2266	2520	112	447	592	682	772	832	982
2000	2024	1250	1510	//	2099	2231	2590	134	529	664	754	844	904	1004
2500	2320	1250	1350	//	2299	2396	2670	134	529	664	754	844	904	954
3000	2925	1250	1350	//	2799	2879	3110	134	529	664	754	844	904	1014
4000	3776	1400	1500	//	2872	2968	3250	117	557	737	842	992	1017	1022
5000	4995	1600	1700	//	2909	3031	3370	94	564	639	789	939	964	1019

Model	H15	H16	H17	H18	H19	P	A	O	B M N	D
	[mm]						Connections F			
500	//	1380	1536	//	//	Øi220/Øe300	1"1/4	3/4"	1"1/4	1"1/2
800	//	1382	1538	//	//	Øi300/Øe380	1"1/2	3/4"	1"1/4	1"1/2
1000	//	1642	1797	//	//	Øi300/Øe380	1"1/2	3/4"	1"1/2	2"
1300	//	1638	1793	//	//	Øi300/Øe380	2"	1"	1"1/2	2"
1500	1552	1602	1757	//	//	Øi300/Øe380	2"	1"	1"1/2	2"
2000	1524	1473	1629	1159	//	Øi300/Øe380	2"	1"	2"	2"
2500	1794	1710	1879	1179	//	Øi300/Øe380	2"	1"	2"	2"
3000	2294	2210	2369	1279	//	Øi300/Øe380	2"	1"	2"	2"
4000	2302	2225	2397	1307	2090	Øi350/Øe430	2"	1"	2"	2"
5000	2319	2159	2404	1314	2024	Øi350/Øe430	2"	1"	2"	2"

P.E.D. product designed and produced in conformity to the article 4.3 of directive 2014/68/UE - ErP Ecodesgin directive 2009/125/CE

CORDIVARI

VASO **INERZIALE INOX**

STAINLESS STEEL 316L DOMESTIC HOT WATER ACCUMULATION TANK



APPLICATION
Domestic hot water storage.
MATERIAL
Stainless Steel 316 L suitable for domestic hot water
INSULATION
- HARD: High thermal insulation with ecological polyurethane hard foam.
- SOFT: NOFIRE® polyester fleece 100% made of recyclable material, with high thermal insulation. Fire resistance class B-s2d0 according to EN 13501. Grey PVC external lining.

CATHODE PROTECTION
Magnesium anode - Models > 1500 n° 2 magnesium anodes.
DRAIN
External confluence through drain connection.
WARRANTY
5 years - See general sales conditions and warranty
ACCESSORIES AND SPARE PARTS
See Accessories section for the entire list.

316L
STAINLESS STEEL
DHW STORAGE

VASO INERZIALE XB

Model	HARD FOAM insulation Art. Nr.	ENERGY EFFICIENCY CLASS
200	3060052140435	**B**
300	3060052140436	**B**
500	3060052140437	**C**



cordivari.com/erp



On line ErP label tool

VASO INERZIALE XC

Model	DISMOUNTABLE SOFT FLEECE insulation Art. Nr.	ENERGY EFFICIENCY CLASS
800	3060052140441	**C**
1000	3060052140442	**C**
1300	3060052140432	**C**
1500	3060052140433	**C**
2000	3060052140434	**C**
2500	3060052140410	
3000	3060052140412	
4000	3060052140414	
5000	3060052140416	

ACCESSORIES

ELECTRIC IMMERSION HEATERS

Mod.	Heated volume by electric immersion heater [lt]	MONOPHASE 1,5 kW	MONOPHASE 2 kW	MONOPHASE 3 kW	THREEPHASE 4 kW	THREEPHASE 5 kW	THREEPHASE 6 kW	THREEPHASE 9 kW	THREEPHASE 12 kW
		5240000000051	5240000000052	5240000000053	5240000000047	5240000000048	5240000000049	5240000000050	5240000000031
		Ignition time from 10 °C to 45 °C with electric immersion heaters [min]			Ignition time from 10 °C to 45 °C with electric immersion heaters [min]				
200	49	87	65	44	//	//	//	//	//
300	76	136	102	68	//	//	//	//	//
500	127	228	171	114	//	//	//	//	//
800	178	318	239	159	//	//	//	//	//
1000	243	436	327	218	163	131	109	73	54
1500	288	516	387	258	194	155	129	86	65
2000	443	793	595	396	297	238	198	132	99
2500	577	1033	775	517	387	310	258	172	129
3000	577	1033	775	517	387	310	258	172	129
4000	797	1428	1071	714	535	428	357	238	178
5000	1040	1864	1398	932	699	559	466	311	233

"Easy Control" Electronic Display-mounted on tank

ART. NR.	FOR MODELS
5005000310002	WC
5005000310003	WB



Thermometer

Art. Nr.
5032240000107
5 units box



Titanium electronic anode (for stainless steel calorifiers)

See Accessories section



P.E.D. product designed and produced in conformity to the article 4.3 of directive 2014/68/UE - ErP Ecodesgin directive 2009/125/CE

VASO **INERZIALE INOX**

STAINLESS STEEL 316L DOMESTIC HOT WATER ACCUMULATION TANK

STORAGE	
Pmax	Tmax
6 bar	95 °C

CORDIVARI Lab

TÜV Rheinland Energie und Umwelt GmbH states that test procedures and Cordivari LAB are certified conforming to European standard EN 15332, as indicated by Ecodesign ErP Directive.

TESTED ErP

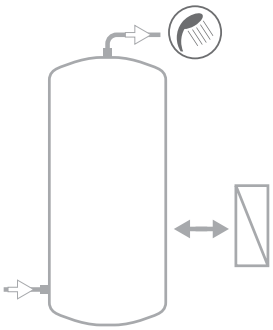

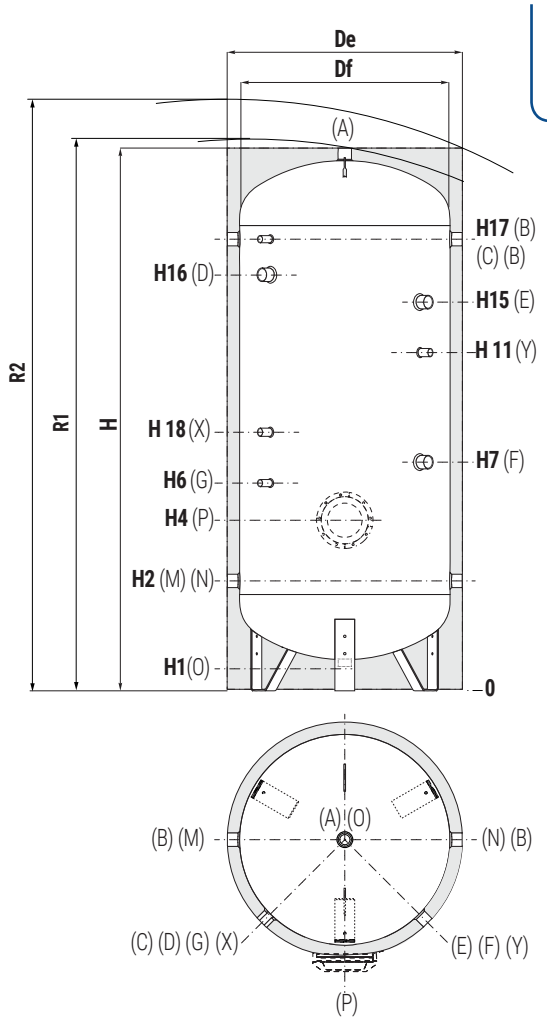

COMPLETE YOUR SYSTEM WITH THE NEW PRS MODULE *(FOR IMMEDIATE DHW PREPARATION)*



SEE HYDRONIC SECTION

A	Domestic hot water outlet
B	Recirculation / Domestic hot water outlet
C	Connection for instrumentation 1/2" F
D	Connection for electric immersion heater
E	Connection for 2nd magnesium anode/Titanium electronic anode 1"1/4 F (only for models > 1500)
F	Connection for magnesium anode/ Titanium electronic anode 1" 1/4 F
G	Connection for instrumentation 1/2" F
M	Domestic cold water circuit inlet
N	Alternative domestic cold water circuit inlet or connection for more boilers
O	Drain
P	Flange (>1000)
X	Connection for titanium electronic anode 3/4" F (>1500)
Y	Connection for titanium electronic anode 3/4" F (> 3000)

Model	Volume	Df (vers. XC)	De (vers. XC)	De (vers. XB)	H	R1	R2	H1	H2	H4	H6	H7	H11
	[lt]	[mm]						[mm]					
200	191	//	//	550	1451	-	1560	81	316	341	511	701	//
300	293	//	//	650	1569	-	1700	149	409	434	604	794	//
500	502	//	//	750	1861	-	2010	141	426	451	621	811	//
800	760	790	1010	//	1943	2040	2190	113	428	483	623	863	//
1000	902	800	1020	//	2212	2300	2440	112	437	492	632	922	//
1300	1274	950	1210	//	2193	2310	2510	118	433	488	628	918	//
1500	1399	1000	1260	//	2177	2310	2520	112	447	502	642	982	//
2000	2019	1250	1510	//	2099	2300	2590	134	529	574	714	1004	//
2500	2320	1250	1350	//	2299	2490	2670	134	529	574	714	954	//
3000	2925	1250	1350	//	2799	2960	3110	134	529	574	714	1014	//
4000	3776	1400	1500	//	2872	3060	3250	117	557	602	742	1022	1657
5000	4995	1600	1700	//	2909	3150	3370	94	564	609	749	1019	1664

Model	H15	H16	H17	H18	P	O	M N B	C G	F	E	D	A
	[mm]					Connections F						
200	//	1066	1176	//	//	3/4"	1"1/4	1/2"	1"1/4	//	1"1/2	1"1/4
300	//	1159	1269	//	//	3/4"	1"1/4	1/2"	1"1/4	//	1"1/2	1"1/4
500	//	1380	1536	//	//	3/4"	1"1/4	1/2"	1"1/4	//	1"1/2	1"1/4
800	//	1382	1538	//	//	3/4"	1"1/4	1/2"	1"1/4	//	1"1/2	1"1/2
1000	//	1642	1797	//	//	3/4"	1"1/2	1/2"	1"1/4	//	2"	1"1/2
1300	//	1638	1793	//	Øi170/Øe240	1"	1"1/2	1/2"	1"1/4	//	2"	2"
1500	1552	1602	1757	//	Øi170/Øe240	1"	1"1/2	1/2"	1"1/4	1"1/4	2"	2"
2000	1524	1473	1629	1159	Øi170/Øe240	1"	2"	1/2"	1"1/4	1"1/4	2"	2"
2500	1794	1710	1879	1179	Øi170/Øe240	1"	2"	1/2"	1"1/4	1"1/4	2"	2"
3000	2294	2210	2369	1279	Øi170/Øe240	1"	2"	1/2"	1"1/4	1"1/4	2"	2"
4000	2302	2225	2397	1307	Øi170/Øe240	1"	2"	1/2"	1"1/4	1"1/4	2"	2"
5000	2319	2159	2404	1314	Øi170/Øe240	1"	2"	1/2"	1"1/4	1"1/4	2"	2"

P.E.D. product designed and produced in conformity to the article 4.3 of directive 2014/68/UE - ErP Ecodesgin directive 2009/125/CE

CORDIVARI

VASO **INERZIALE INOX A1**

STAINLESS STEEL 316L DOMESTIC HOT WATER ACCUMULATION TANK WITH FIREPROOF INSULATION AND ALUMINIUM EXTERNAL COVER



APPLICATION
Domestic hot water storage.
MATERIAL
Stainless Steel 316 L suitable for domestic hot water
INSULATION (DISMOUNTABLE)
Complete fireproof class A1 insulation in compliance with EN 13501, consisting of:
-Glass/rock wool with high thermal insulation
-Aluminium cover hinged and removable
The models 3000-4000-5000 are supplied with non-assembled insulation.
CATHODE PROTECTION
Magnesium anode. Models > 1500 n° 2 magnesium anodes.

DRAIN
External confluence through drain connection.
GASKET- FLANGE PLATE
Silicone gaskets suitable for water intended for human consumption (tested according to 98/83/CE), max temperature up to 200°C. Mild steel inspection flange with Polywarm® coating.
WARRANTY
5 years - See general sales conditions and warranty
ACCESSORIES AND SPARE PARTS
See Accessories section for the entire list.

316L
STAINLESS STEEL
DHW STORAGE

VASO INERZIALE A1 X

Model	NOT DISMOUNTABLE aluminum cover Art. Nr.	ENERGY EFFICIENCY CLASS
800	3060052140330	C
1000	3060052140331	C
1500	3060052140332	C
2000	3060052140333	C



cordivari.com/erp



On line ErP label tool

VASO INERZIALE A1 X

Model	DISMOUNTABLE aluminum cover Art. Nr.
2500	3060052140310
3000	3060052140312
5000	3060052140315

VASO INERZIALE A1 X

	Model	DISMOUNTABLE aluminium cover Art. Nr.
Lowered models	**2500**	3060052140311
	3000	3060052140313
	4000	3060052140314

ACCESSORIES

ELECTRIC IMMERSION HEATERS

Mod.	Heated volume by electric immersion heater [lt]	**5** kW 5240000000048	**6** kW 5240000000049	**9** kW 5240000000050	**12** kW 5240000000031
800	640	8h 11'	6h 49'	4h 32'	-
1000	718	-	7h 36'	5h 06'	3h 49'
1500	1031	-	-	-	5h 29'
2000	1345	-	-	-	7h 10'
2500	1652	-	-	-	8h 48'
3000	2266	-	-	-	12h 04'
4000	2810	-	-	-	14h 58'
5000	3814	-	-	-	20h 19'

P.E.D. product designed and produced in conformity to the article 4.3 of directive 2014/68/UE - ErP Ecodesgin directive 2009/125/CE

VASO **INERZIALE INOX A1**

STAINLESS STEEL 316L DOMESTIC HOT WATER ACCUMULATION TANK WITH FIREPROOF INSULATION AND ALUMINUM EXTERNAL COVER

STORAGE	
Pmax	Tmax
7 bar	95 °C

COMPLETE YOUR SYSTEM WITH THE NEW PRS MODULE *(FOR IMMEDIATE DHW PREPARATION)*



SEE HYDRONIC SECTION

CORDIVARI Lab

TÜV Rheinland Energie und Umwelt GmbH states that test procedures and Cordivari LAB are certified conforming to European standard EN 15332, as indicated by Ecodesign ErP Directive.

TESTED ErP

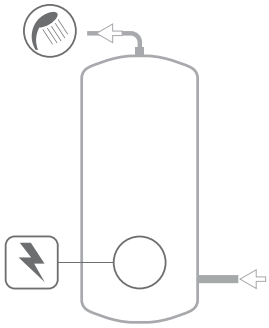

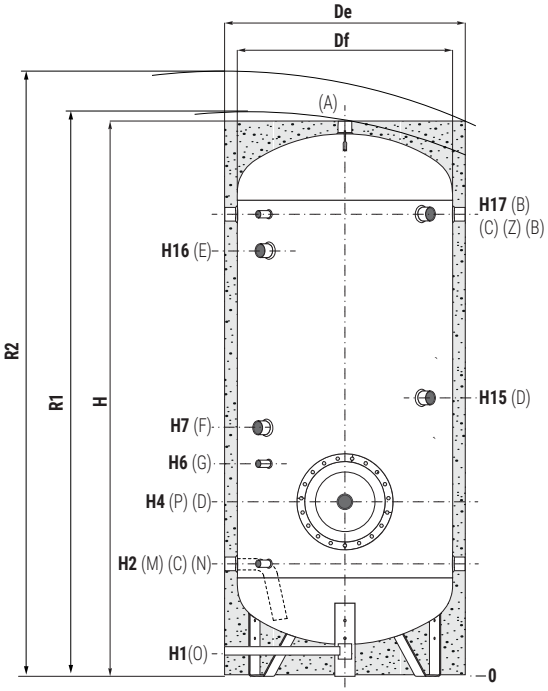

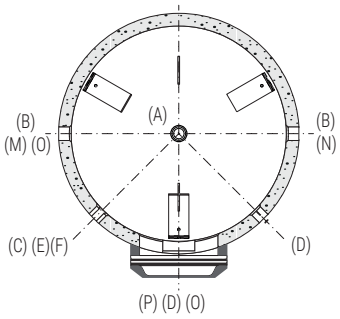

A	Domestic hot water outlet
B	Backflow external heat exchanger / Recirculation
C-G	Connection for instrumentation 1/2" F
D	Connection for electric immersion heater
E	Connection for 2nd magnesium anode 1" 1/4 F (Modelli >1500)
F	Connection for magnesium anode 1" 1/4 F
M	Domestic cold water circuit inlet
N	Delivery to external heat exchanger
O	Drain
P	Blind flange for inspection
Z	Connection for electric immersion heater 1" 1/2 F

	Model	Volume	Weight	Df	De	H	R1	R2	H1	H2	H4
		[lt]	[kg]	[mm]							
	800	793	161	750	950	2188	//	2390	89	433	568
	1000	112	191	800	1050	2188	//	2430	84	437	722
	1500	1427	312	1000	1200	2228	//	2530	74	447	732
	2000	2017	374	1250	1450	2111	//	2560	96	529	804
	2500	2319	443	1250	1450	2361	2670	2770	96	529	804
	3000	2925	477	1250	1450	2861	3120	3210	96	529	804
	5000	4995	755	1600	1800	2965	3370	3470	56	564	839
Lowered models	**2500**	2635	469	1400	1600	2175	2590	2700	79	557	832
	3000	3039	515	1500	1700	2190	2660	2770	106	556	831
	4000	4002	648	1600	1800	2465	2940	3050	56	564	839

	Model	H6	H7	H15	H16	H17	P	O	M-N-B	D	A
		[mm]						Connections F			
	800	718	1018	1118	//	1793	Øi300/Øe380	1"1/4	1"1/4	1"1/2	1"1/4
	1000	922	1122	1222	//	1743	Øi430/Øe512	1"1/2	1"1/2	2"1/2	1"1/2
	1500	932	1132	1232	//	1807	Øi430/Øe512	1"	1"1/2	2"1/2	2"
	2000	1004	1154	1264	1469	1619	Øi430/Øe512	1"	2"	2"1/2	2"
	2500	1004	1199	1299	1644	1869	Øi430/Øe512	1"	2"	2"1/2	2"
	3000	1004	1354	1454	2144	2369	Øi430/Øe512	1"	2"	2"1/2	2"
	5000	1039	1339	1459	2179	2404	Øi430/Øe512	1"	2"	2"1/2	2"
Lowered models	**2500**	1032	1182	1282	1507	1657	Øi430/Øe512	1"	2"	2"1/2	2"
	3000	1031	1181	1281	1506	1656	Øi430/Øe512	1"	2"	2"1/2	2"
	4000	1039	1189	1309	1764	1914	Øi430/Øe512	1"	2"	2"1/2	2"

P.E.D. product designed and produced in conformity to the article 4.3 of directive 2014/68/UE - ErP Ecodesgin directive 2009/125/CE

VASO **INERZIALE INOX COMPACT**

STAINLESS STEEL 316L DOMESTIC HOT WATER ACCUMULATION TANK SUITABLE FOR LOW-CEILINGED ROOMS



APPLICATION
Domestic hot water storage. Suitable for low-ceilinged rooms.
MATERIAL
Stainless Steel 316 L suitable for domestic hot water
INSULATION (DISMOUNTABLE)
NOFIRE® polyester fleece 100% made of recyclable material, with high thermal insulation. Fire resistance class B-s2d0 according to EN 13501.
Grey PVC external lining.
CATHODE PROTECTION
N° 2 magnesium anodes.

DRAIN
External confluence through drain connection.
GASKET- FLANGE PLATE
Silicone gaskets suitable for water intended for human consumption (tested according to 98/83/CE), max temperature up to 200°C. Stainless steel exchanger head.
WARRANTY
5 years - See general sales conditions and warranty
ACCESSORIES AND SPARE PARTS
See Accessories section for the entire list.

316L
STAINLESS STEEL
DHW STORAGE

VASO INERZIALE COMPACT XC

Model	DISMOUNTABLE SOFT FLEECE insulation
	Art. Nr.
2500	3060052140411
3000	3060052140413
4000	3060052140415



cordivari.com/erp



On line ErP label tool

ACCESSORIES

ELECTRIC IMMERSION HEATERS

Mod.	Heated volume by electric immersion heater [lt]	MONOPHASE 1,5 kW	MONOPHASE 2 kW	MONOPHASE 3 kW	THREEPHASE 4 kW	THREEPHASE 5 kW	THREEPHASE 6 kW	THREEPHASE 9 kW	THREEPHASE 12 kW
		5240000000051	5240000000052	5240000000053	5240000000047	5240000000048	5240000000049	5240000000050	5240000000031
		Ignition time from 10 °C to 45 °C with electric immersion heaters [min]			Ignition time from 10 °C to 45 °C with electric immersion heaters [min]				
2500	797	1428	1071	714	535	428	357	238	178
3000	874	1565	1173	782	587	469	391	261	196
4000	924	1655	1241	828	621	497	414	276	207

"Easy Control" Electronic Display-mounted on tank

ART. NR.	FOR MODELS
5005000310002	XC



Titanium electronic anode (for stainless steel calorifiers)

See Accessories section



P.E.D. product designed and produced in conformity to the article 4.3 of directive 2014/68/UE - ErP Ecodesgin directive 2009/125/CE

VASO **INERZIALE INOX COMPACT**

STAINLESS STEEL 316L DOMESTIC HOT WATER ACCUMULATION TANK
SUITABLE FOR LOW-CEILINGED ROOMS

STORAGE	
Pmax	Tmax
6 bar	95 °C

CORDIVARI Lab

TÜV Rheinland Energie und Umwelt GmbH states that test procedures and Cordivari LAB are certified conforming to European standard EN 15332, as indicated by Ecodesign ErP Directive.

TESTED ErP

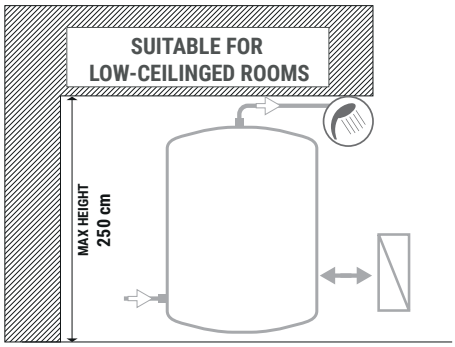

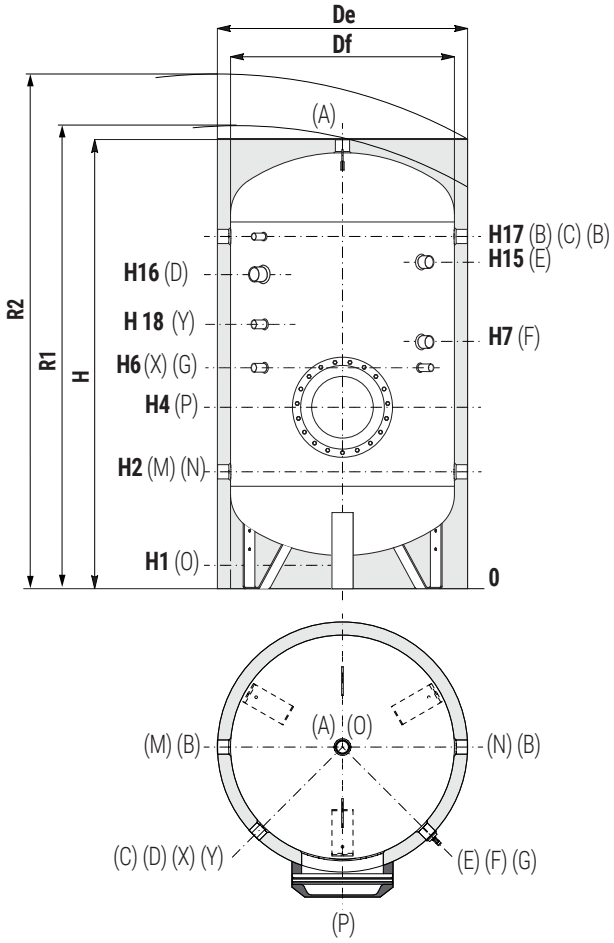

A	Domestic hot water outlet 2" F
B	Recirculation / Domestic hot water outlet 2" F
C	Connection for instrumentation 1/2" F
D	Connection for electric immersion heater 2" F
E	Connection for 2nd magnesium anode/Titanium electronic anode 1"1/4 F
F	Connection for magnesium anode/Titanium electronic anode 1" 1/4 F
G	Connection for instrumentation 1/2" F
M	Domestic cold water circuit inlet 2" F
N	Alternative domestic cold water circuit inlet or connection for more boilers 2" F
O	Drain 1" F
P	Flange
X	Connection for titanium electronic anode 3/4" F
Y	Connection for titanium electronic anode 3/4" F (Solo 4000)

COMPLETE YOUR SYSTEM WITH THE NEW PRS MODULE *(FOR IMMEDIATE DHW PREPARATION)*

SEE HYDRONIC SECTION



Model	Volume	Df	De	H	R1	R2	H1	H2	H4	H6	H7
	[lt]	[mm]									
2500	2635	1400	1500	2122	2542	2600	117	557	602	742	982
3000	3038	1500	1600	2131	2606	2670	106	556	601	741	981
4000	4002	1600	1700	2409	2892	2950	94	564	609	749	1029

Model	H15	H16	H17	H18	P
	[mm]				
2500	1552	1501	1657	//	Øi170/Øe240
3000	1551	1500	1656	//	Øi170/Øe240
4000	1809	1732	1904	1261	Øi170/Øe240

P.E.D. product designed and produced in conformity to the article 4.3 of directive 2014/68/UE - ErP Ecodesgin directive 2009/125/CE

BOLLY® **1 ST INOX**

STAINLESS STEEL 316L DOMESTIC HOT WATER CALORIFIER WITH 1 FIXED STAINLESS STEEL HEAT EXCHANGER



APPLICATION
Production and storage of domestic hot water (DHW).
MATERIAL
Stainless Steel 316 L suitable for domestic hot water
HEAT EXCHANGER
Fixed stainless steel 316L heat exchanger.
INSULATION
- HARD: High thermal insulation with ecological polyurethane hard foam.
- SOFT: NOFIRE® polyester fleece 100% made of recyclable material, with high thermal insulation. Fire resistance class B-s2d0 according to EN 13501. Grey PVC external lining.

CATHODE PROTECTION
Magnesium anode.
DRAIN
External confluence through drain connection.
GASKET- FLANGE PLATE
Silicone gaskets suitable for water intended for human consumption (tested according to 98/83/CE), max temperature up to 200°C. Stainless steel exchanger head.
WARRANTY
5 years - See general sales conditions and warranty
ACCESSORIES AND SPARE PARTS
See Accessories section for the entire list.

316L STAINLESS STEEL DHW STORAGE

316L STAINLESS STEEL HEAT EXCHANGER

STOCK AVAILABILITY



cordivari.com/erp



On line ErP label tool

BOLLY® 1 ST XB

Model	HARD FOAM insulation Art. Nr.	HEAT EXCHANGER SURFACE [m²]	ENERGY EFFICIENCY CLASS
150	3105052010251	0,6	**B**
200	3105052010252	1	**B**
300	3105052010256	1,2	**B**
400	3105052010254	1,8	**C**
500	3105052010257	1,8	**C**

BOLLY® 1 ST XC

Model	DISMOUNTABLE SOFT FLEECE insulation Art. Nr.	HEAT EXCHANGER SURFACE [m²]	ENERGY EFFICIENCY CLASS
800	3103052010276	2,7	**C**
1000	3105052010258	3,0	**C**
1500	3103052010279	3,7	**C**
2000	3103052010280	4,1	**C**

ACCESSORIES

ELECTRIC IMMERSION HEATERS

Mod.	Heated volume by electric immersion heater [lt]	MONOPHASE 1,5 kW	MONOPHASE 2 kW	MONOPHASE 3 kW	THREEPHASE 4 kW	THREEPHASE 5 kW	THREEPHASE 6 kW	THREEPHASE 9 kW	THREEPHASE 12 kW
		5240000000051	5240000000052	5240000000053	5240000000047	5240000000048	5240000000049	5240000000050	5240000000031
		Ignition time from 10 °C to 45 °C with electric immersion heaters [min]			Ignition time from 10 °C to 45 °C with electric immersion heaters [min]				
150	42	76	57	38	//	//	//	//	//
200	72	128	96	64	//	//	//	//	//
300	113	202	152	101	//	//	//	//	//
400	167	299	225	150	//	//	//	//	//
500	184	329	247	165	//	//	//	//	//
800	313	560	420	280	//	//	//	//	//
1000	383	686	514	343	257	206	171	114	86
1500	557	998	749	499	374	299	250	166	125
2000	835	1495	1121	747	560	448	374	249	187

"Easy Control" Electronic Display-mounted on tank

ART. NR.	FOR MODELS
5005000310002	XC
5005000310003	XB



Thermometer

Art. Nr.
5032240000107
5 units box



P.E.D. product designed and produced in conformity to the article 4.3 of directive 2014/68/UE - ErP Ecodesgin directive 2009/125/CE

BOLLY® **1 ST INOX**

STAINLESS STEEL 316L DOMESTIC HOT WATER CALORIFIER WITH 1 FIXED STAINLESS STEEL HEAT EXCHANGER

STORAGE		HEAT EXCHANGER	
Pmax	Tmax	Pmax	Tmax
6 bar	95 °C	12 bar	110 °C

CORDIVARI Lab

TÜV Rheinland Energie und Umwelt GmbH states that test procedures and Cordivari LAB are certified conforming to European standard EN 15332, as indicated by Ecodesign ErP Directive.

TESTED ErP

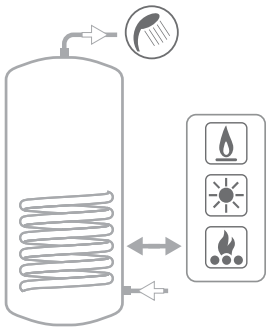

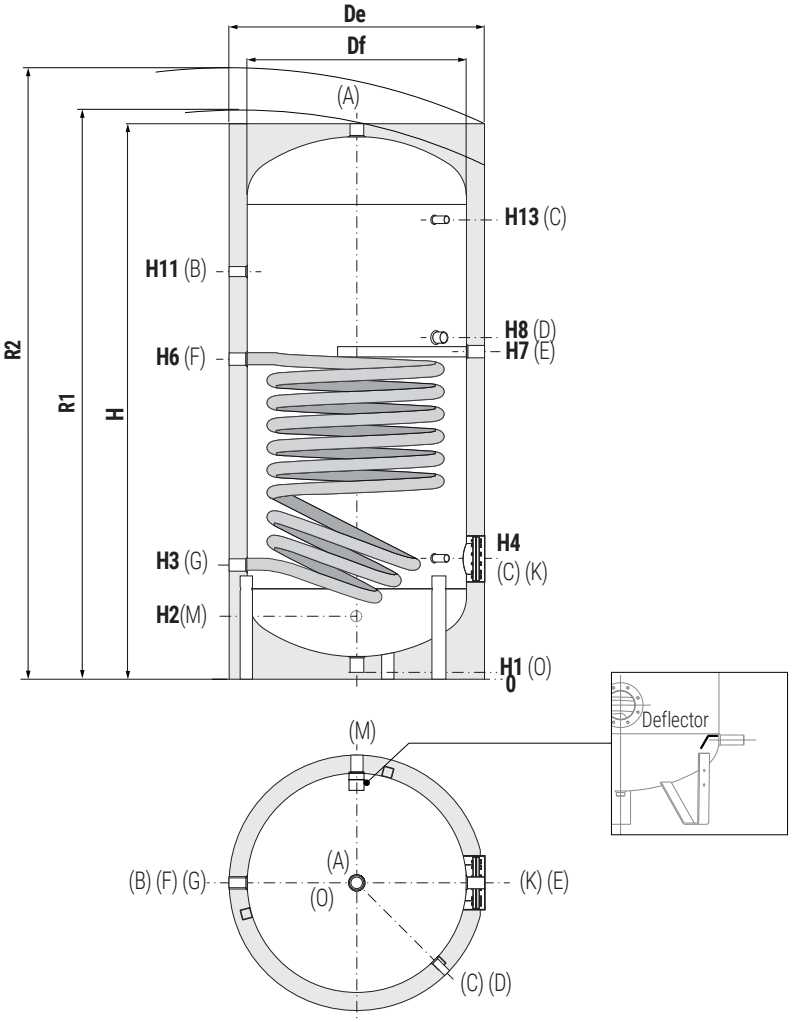

A	Domestic hot water outlet
B	Recirculation
C	Connection for instrumentation 1/2" F
D	Connection for electric immersion heater
E	Connection for magnesium anode 1"1/4 F
F	Lower heat exchanger inlet 1"1/4 F
G	Lower heat exchanger outlet 1"1/4 F
K	Blind flange for inspection
M	Domestic cold water circuit inlet
N	Connection for instrumentation 1/2" F
O	Drain 1" 1/4 F For models < 500
P	Drain for models > 500

Model	Volume	Weight	Df (vers. WC)	De (vers. WC)	De (vers. WB)	H	R1 (vers. WC)	R2	H1	H2	H3
	[lt]	[Kg]	[mm]					[mm]			
150	148	49	//	//	500	1414	//	1500	70	210	275
200	189	55	//	//	550	1434	//	1536	70	220	285
300	291	67	//	//	650	1486	//	1622	70	246	311
400	422	88	//	//	700	1766	//	1900	70	261	326
500	498	120	//	//	750	1786	//	1937	70	271	346
800	789	184	750	950	900	2163	2200	2343	101	493	428
1000	1038	215	850	1050	1000	2217	2265	2432	89	524	439
1500	1443	389	950	1150	1100	2440	2495	2654	109	450	425

Model	H4	H6	H7	H8	H11	H13	K	P	M	D	B	A
	[mm]							Connections F				
150	315	759	815	885	1065	1185	Øi120/Øe180	-	3/4"	1"1/2	3/4"	1"1/4
200	325	811	855	915	1089	1195	Øi120/Øe180	-	3/4"	1"1/2	3/4"	1"1/4
300	381	832	871	931	1101	1221	Øi120/Øe180	-	1"	1"1/2	1"	1"1/4
400	396	988	1033	1091	1286	1486	Øi120/Øe180	-	1"	1"1/2	1"	1"1/4
500	411	1036	1076	1144	1331	1476	Øi120/Øe180	-	1"	1"1/2	1"	1"1/4
800	483	1181	1243	1308	1598	1788	Øi170/Øe240	3/4"	1"	2"	1"	1"1/4
1000	499	1279	1309	1364	1584	1819	Øi170/Øe240	3/4"	1"1/4	2"	1"	1"1/2
1500	575	1403	1450	1515	1825	2065	Øi300/Øe380	1"	1"1/2	2"	1"	2"

P.E.D. product designed and produced in conformity to the article 4.3 of directive 2014/68/UE - ErP Ecodesgin directive 2009/125/CE

BOLLY® **1 ST INOX**

HEAT EXCHANGER TECHNICAL DATA



Data have been calculated on following basis:
1) Primary circuit at T1 and proper energy source;
2) Production of DHW in continuous way from 10 °C at t2;
3) DHW that can be taken in the first 10' and in the first hour from storage at 60°C, input 10°C and output 45°C;
4) Sanitary water according to UNI CTI 8065.

LOWER
HEAT EXCHANGER

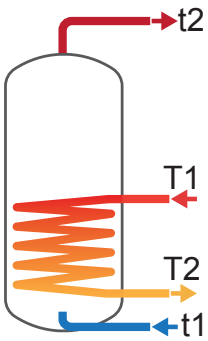

Model	Primary Flow rate	Ignition time (minutes) from 10 °C to t2 and primary at T1				Maximum power exchange (kW) with primary at T1, secondary within 10-45 °C and constant use of DHW production				DHW continuous production lt/h within 10-45 °C and primary at T1			
	[m³/h]	T1/t2				T1				T1			
		55/50	65/60	70/60	80/60	55	65	70	80	55	65	70	80
150	2	102	106	74	48	6,4	9,6	11,2	14,5	156	235	276	358
	1	115	120	83	55	5,9	8,7	10,2	13,1	144	214	250	322
200	2,5	78	81	57	37	10,7	16,0	18,7	24,1	263	394	460	596
	1,25	88	92	65	43	9,9	14,6	16,9	21,7	243	359	417	536
300	3	99	103	72	47	13,0	19,4	22,6	29,2	318	477	557	721
	1,5	110	115	81	54	12,1	17,7	20,6	26,4	297	438	508	653
400	3,5	97	101	71	47	19,4	28,8	33,6	43,3	477	711	829	1070
	1,75	109	114	81	54	18,0	26,3	30,5	38,9	444	650	753	961
500	3,5	115	119	84	55	19,4	28,8	33,6	43,3	477	711	829	1070
	1,75	129	135	96	64	18,0	26,3	30,5	38,9	444	650	753	961
800	6	113	118	83	55	29,2	43,5	50,7	65,5	719	1074	1254	1619
	3	127	132	94	62	27,1	39,8	46,2	59,1	671	985	1143	1462
1000	6	122	127	90	59	32,3	48,0	56,0	72,2	796	1187	1384	1786
	3	138	144	103	68	30,0	43,8	50,7	64,8	740	1084	1256	1604
1500	6	157	163	116	76	39,4	58,5	68,0	87,5	974	1445	1682	2165
	3	180	188	134	89	36,4	52,8	61,0	77,6	900	1307	1511	1921
2000	6	206	215	153	101	43,5	64,3	74,7	96,0	1074	1590	1849	2376
	3	239	250	179	119	40,0	57,8	66,7	84,6	989	1431	1652	2095

Model	Primary Flow rate	DHW produced in the first 10 minutes in lt/10' input 10 °C output 45 °C, storage at t2 and primary at T1				DHW produced in the first hour in lt/60' input 10 °C output 45 °C, storage at t2 and primary at T1				Heat exchanger pressure loss	
	[m³/h]	T1/t2				T1/t2				[mm H_2O]	[mbar]
		55/50	65/60	70/60	80/60	55/50	65/60	70/60	80/60		
150	2	196	252	259	272	295	359	391	456	226	22
	1	194	249	254	267	285	341	370	428	66	6
200	2,5	262	339	350	372	429	533	586	695	528	52
	1,25	259	333	342	362	413	505	552	647	154	15
300	3	388	498	511	539	590	716	781	912	786	77
	1,5	384	491	503	527	572	685	742	857	234	23
400	3,5	565	726	745	786	867	1055	1149	1342	1545	151
	1,75	560	715	733	767	841	1006	1088	1255	459	45
500	3,5	654	837	857	897	956	1144	1238	1431	1545	151
	1,75	649	827	844	879	930	1095	1177	1344	459	45
800	6	987	1263	1293	1354	1443	1727	1871	2163	1110	109
	3	979	1248	1275	1328	1404	1655	1781	2037	330	32
1000	6	1164	1486	1519	1586	1668	1981	2138	2460	1233	121
	3	1154	1469	1498	1556	1623	1898	2035	2314	367	36
1500	6	1760	2238	2278	2358	2377	2754	2944	3330	1521	149
	3	1748	2215	2249	2317	2318	2644	2806	3135	452	44
2000	6	2485	3148	3191	3279	3166	3578	3786	4207	1686	165
	3	2471	3121	3158	3232	3098	3451	3627	3982	501	49

HEAT EXCHANGER PRESSURE LOSS

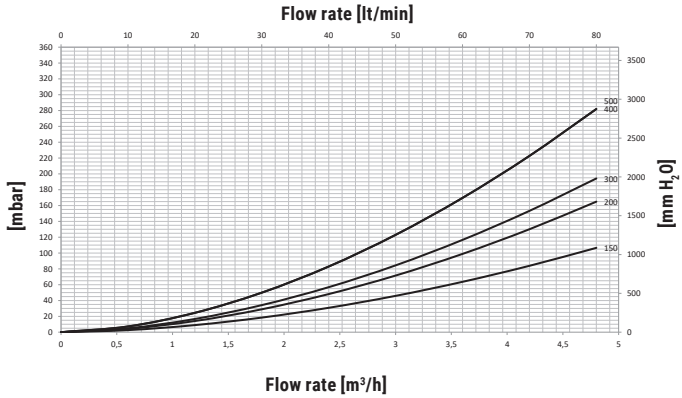

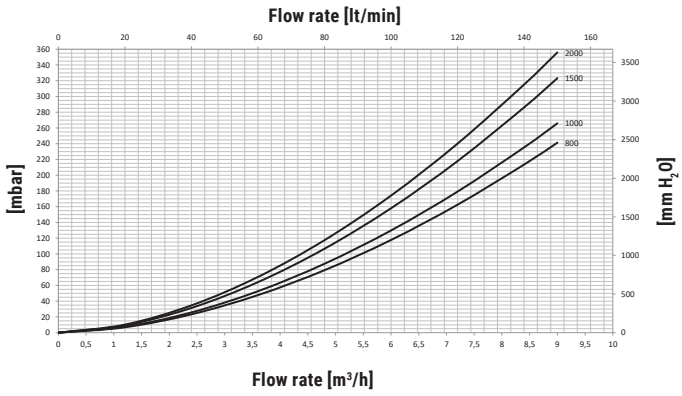

BOLLY® **1 ST INOX**

HEAT EXCHANGER TECHNICAL DATA



Heat Exchanger output referred to temperature and flow rate of primary circuit and with secondary at 10/45°C at maximum withdrawal of producible DHW (Upper limit of the curves referred to maximum primary flow rate in the heat exchanger, while the lower limit in the curves refer to the minimum primary flow rate)

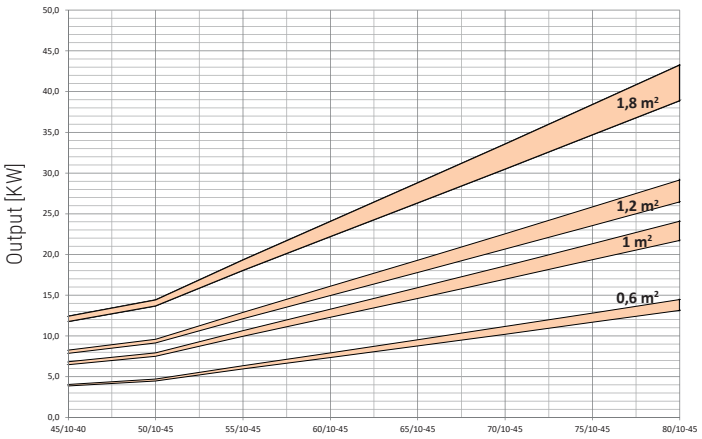

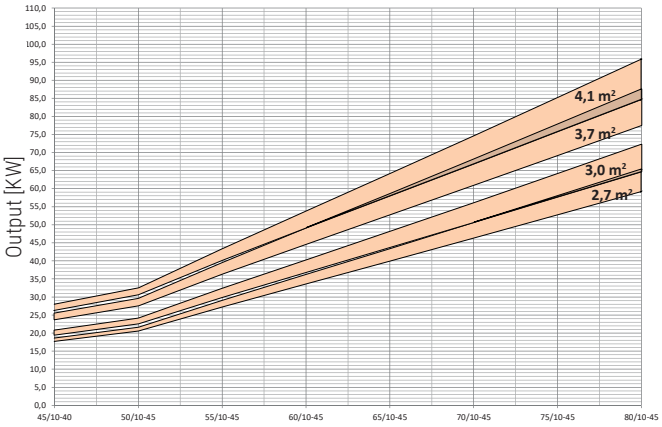

Heat exchanger surface [m²]	0,6		1		1,2		1,8	
Flow rate [m³/h]	MAX	MIN	MAX	MIN	MAX	MIN	MAX	MIN
	2	1	2,5	1,5	3	1,5	3,5	1,75

Heat exchanger surface [m²]	2,7		3,0		3,7		4,1	
Flow rate [m³/h]	MAX	MIN	MAX	MIN	MAX	MIN	MAX	MIN
	6	3	6	3	6	3	6	3

EXAMPLE OF INSTALLATION WITH **BOLLY® 1 ST INOX**

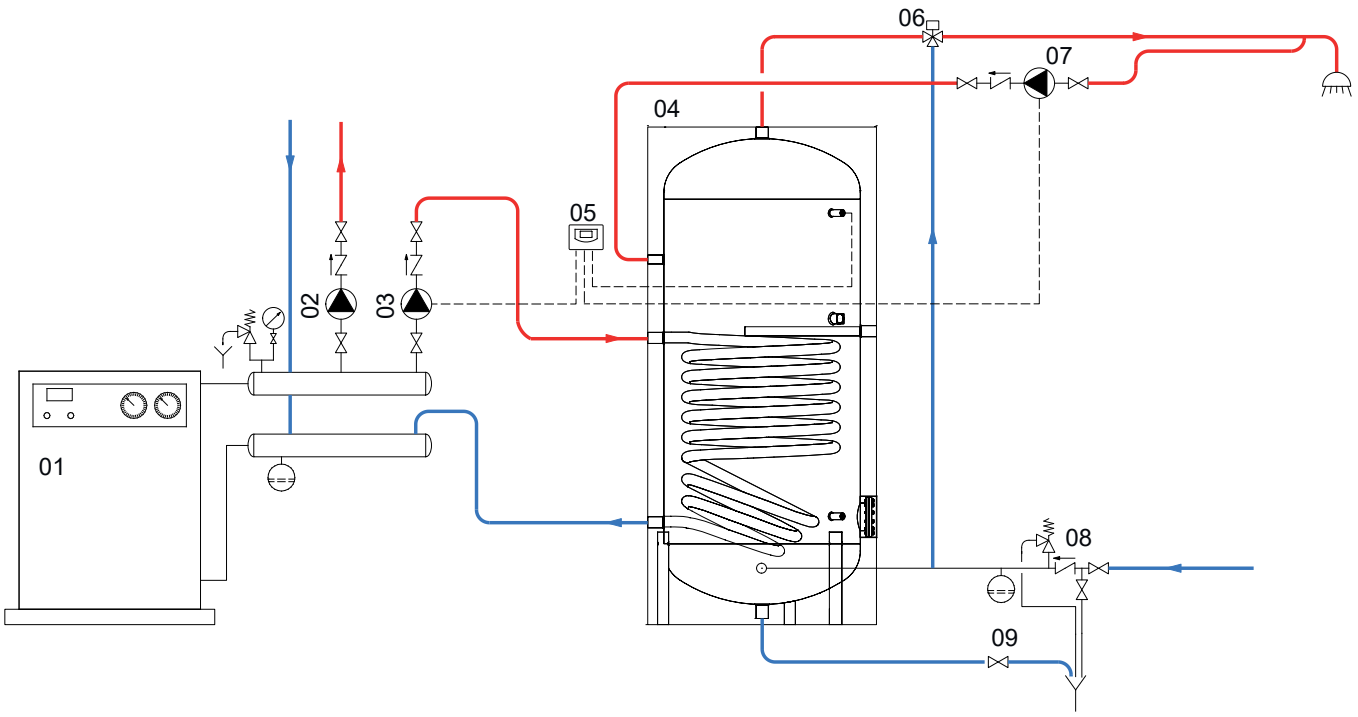

01	Generator	04	Bolly® 1 ST	07	D.H.W. recirculation group
02	Heating system circulation group	05	Easy Control electronic display/ thermostat	08	Hydraulic safety group
03	D.H.W. circulation group	06	Thermostatic mixing valve	09	Blowdown valve

BOLLY® **2 ST INOX**

STAINLESS STEEL 316L DOMESTIC HOT WATER CALORIFIER WITH 2 FIXED STAINLESS STEEL HEAT EXCHANGERS



APPLICATION
Production and storage of domestic hot water (DHW).
MATERIAL
Stainless Steel 316 L suitable for domestic hot water
HEAT EXCHANGER
N° 2 fixed stainless steel 316L heat exchanger.
INSULATION
- HARD: High thermal insulation with ecological polyurethane hard foam.
- SOFT: NOFIRE® polyester fleece 100% made of recyclable material, with high thermal insulation. Fire resistance class B-s2d0 according to EN 13501. Grey PVC external lining.

CATHODE PROTECTION
Magnesium anode.
DRAIN
External confluence through drain connection.
GASKET- FLANGE PLATE
Silicone gaskets suitable for water intended for human consumption (tested according to 98/83/CE), max temperature up to 200°C. Stainless steel exchanger head.
WARRANTY
5 years - See general sales conditions and warranty
ACCESSORIES AND SPARE PARTS
See Accessories section for the entire list.

316L STAINLESS STEEL DHW STORAGE

316L STAINLESS STEEL HEAT EXCHANGER

STOCK AVAILABILITY



cordivari.com/erp



On line ErP label tool

BOLLY® 2 ST XB

Model	HARD FOAM insulation	Heat exchanger surface Upper	Lower	Energy efficiency class
	Art. Nr.	[m²]		
150	3135052010351	0,4	0,6	**B**
200	3135052010352	0,5	1	**B**
300	3135052010356	0,85	1,2	**B**
400	3135052010324	1	1,8	**C**
500	3135052010357	1,2	1,8	**C**

BOLLY® 2 ST XC

Model	DISMOUNTABLE SOFT FLEECE insulation	Heat exchanger surface Upper	Lower	Energy efficiency class
	Art. Nr.	[m²]		
800	3133052010076	1,5	2,7	**C**
1000	3135052010358	1,8	3,0	**C**
1500	3133052010079	2,1	3,7	**C**
2000	3133052010080	2,3	4,1	**C**

ACCESSORIES

ELECTRIC IMMERSION HEATERS

Mod.	Heated volume by electric immersion heater [lt]	MONOPHASE 1,5 kW	2 kW	3 kW	THREEPHASE 4 kW	5 kW	6 kW	9 kW	12 kW
		5240000000051	5240000000052	5240000000053	5240000000047	5240000000048	5240000000049	5240000000050	5240000000031
		Ignition time from 10 °C to 45 °C with electric immersion heaters [min]			Ignition time from 10 °C to 45 °C with electric immersion heaters [min]				
150	42	76	57	38	//	//	//	//	//
200	72	128	96	64	//	//	//	//	//
300	113	202	152	101	//	//	//	//	//
400	167	299	225	150	//	//	//	//	//
500	184	329	247	165	//	//	//	//	//
800	313	560	420	280	//	//	//	//	//
1000	383	686	514	343	257	206	171	114	86
1500	557	998	749	499	374	299	250	166	125
2000	835	1495	1121	747	560	448	374	249	187

"Easy Control" Electronic Display-mounted on tank

ART. NR.	FOR MODELS
5005000310002	XC
5005000310003	XB



Thermometer

Art. Nr.
5032240000107
5 units box



P.E.D. product designed and produced in conformity to the article 4.3 of directive 2014/68/UE - ErP Ecodesgin directive 2009/125/CE

BOLLY® **2 ST INOX**

STAINLESS STEEL 316L DOMESTIC HOT WATER CALORIFIER WITH 2 FIXED STAINLESS STEEL HEAT EXCHANGERS

STORAGE		HEAT EXCHANGER	
Pmax	Tmax	Pmax	Tmax
6 bar	95 °C	12 bar	110 °C

CORDIVARI Lab

TÜV Rheinland Energie und Umwelt GmbH states that test procedures and Cordivari LAB are certified conforming to European standard EN 15332, as indicated by Ecodesign ErP Directive.

TESTED ErP

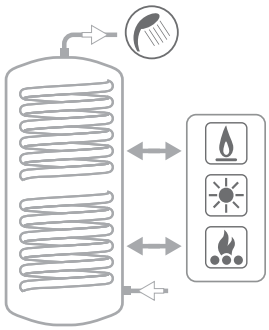

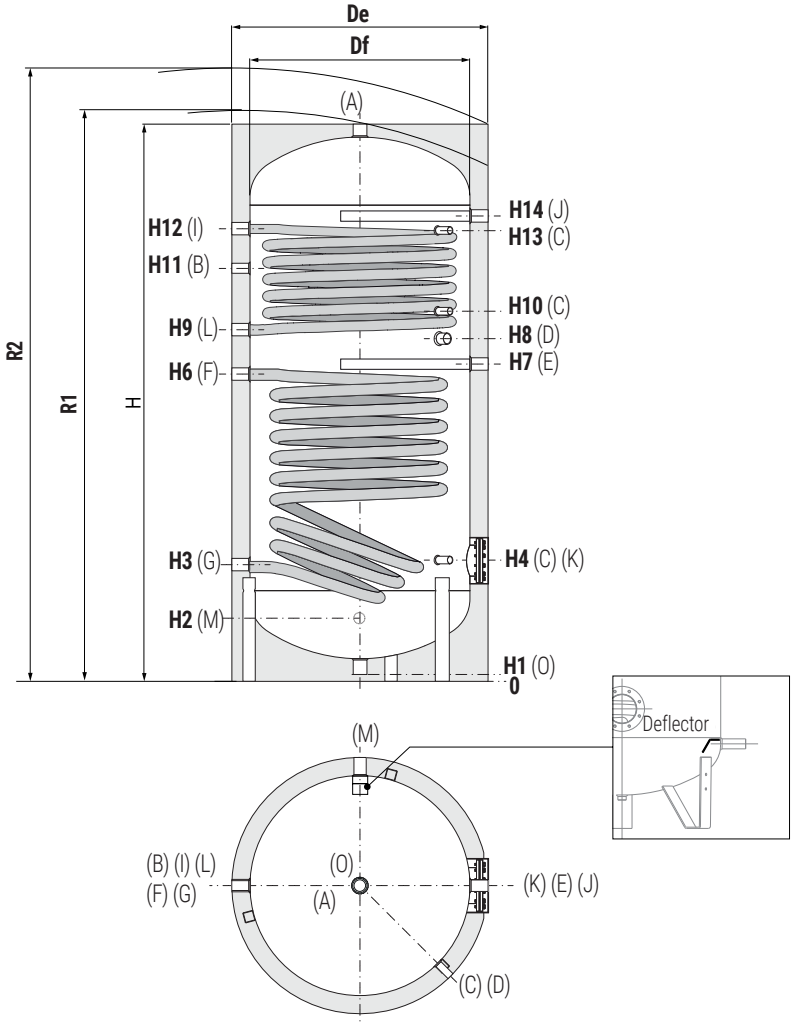

A	Domestic hot water outlet
B	Recirculation
C	Connection for instrumentation 1/2" F
D	Connection for electric immersion heater
E	Connection for magnesium anode 1"1/4 F
F	Lower heat exchanger inlet 1"1/4 F
G	Lower heat exchanger outlet 1"1/4 F
I	Upper heat exchanger inlet 1"1/4 F
J	Connection for 2nd magnesium anode 1"1/4 F (only for models>500)
K	Blind flange for inspection
L	Upper heat exchanger outlet 1"1/4 F
M	Domestic cold water circuit inlet
N	Connection for instrumentation 1/2" F
O	Drain 1" 1/4 F for models < 500
P	Drain for models > 500

Model	Volume	Weight	Df (vers. WC)	De (vers. WC)	De (vers. WB)	H	R1 (vers. WC)	R1 (vers. WB)	R2	H1	H2	H3	H4
	[lt]	[Kg]	[mm]		[mm]		[mm]		[mm]				
150	148	54	//	//	500	1414	//	//	1500	70	210	275	315
200	189	65	//	//	550	1434	//	//	1536	70	220	285	325
300	291	83	//	//	650	1486	//	//	1622	70	246	311	381
400	422	112	//	//	700	1766	//	//	1900	70	261	326	396
500	498	134	//	//	750	1786	//	//	1937	70	271	346	411
800	789	232	750	950	900	2163	2200	//	2343	101	493	428	483
1000	1038	272	850	1050	1000	2217	2265	//	2432	89	524	439	499
1500	1443	351	950	1150	1100	2440	2495	//	2654	109	450	425	575

Model	H6	H7	H8	H9	H10	H11	H12	H13	H14	K	P	M	D	B	A
	[mm]										Connections F				
150	759	815	885	945	1035	1065	1185	1185	//	Øi120/Øe180	-	3/4"	1"1/2	3/4"	1"1/4
200	811	855	915	960	1105	1089	1195	1195	//	Øi120/Øe180	-	3/4"	1"1/2	3/4"	1"1/4
300	832	871	931	981	1076	1101	1221	1221	//	Øi120/Øe180	-	1"	1"1/2	1"	1"1/4
400	988	1033	1091	1143	1286	1286	1486	1486	//	Øi120/Øe180	-	1"	1"1/2	1"	1"1/4
500	1036	1076	1144	1186	1296	1331	1476	1476	//	Øi120/Øe180	-	1"	1"1/2	1"	1"1/4
800	1181	1243	1308	1362	1579	1598	1770	1788	1808	Øi170/Øe240	3/4"	1"	2"	1"	1"1/4
1000	1279	1309	1364	1399	1609	1584	1819	1819	1839	Øi170/Øe240	3/4"	1"1/4	2"	1"	1"1/2
1500	1403	1450	1515	1550	2045	1825	2065	1735	2065	Øi300/Øe380	1"	1"1/2	2"	1"	2"

P.E.D. product designed and produced in conformity to the article 4.3 of directive 2014/68/UE - ErP Ecodesgin directive 2009/125/CE

CORDIVARI

BOLLY® **2 ST INOX**

HEAT EXCHANGERS TECHNICAL DATA



Data have been calculated on following basis:
1) Primary circuit at T1 and proper energy source;
2) Production of DHW in continuous way from 10 °C at t2;
3) DHW that can be taken in the first 10' and in the first hour from storage at 60°C, input 10°C and output 45°C;
4) Sanitary water according to UNI CTI 8065.

UPPER
HEAT EXCHANGER

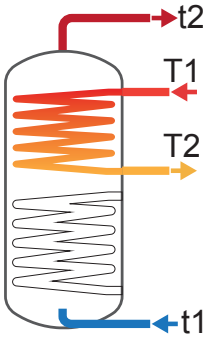

Model	Primary Flow rate	Ignition time (minutes) from 10 °C to t2 and primary at T1				Maximum power exchange (kW) with primary at T1, secondary within 10-45 °C and constant use of DHW production				DHW continuous production lt/h within 10-45 °C and primary at T1			
	[m³/h]	T1/t2				T1				T1			
		55/50	65/60	70/60	80/60	55	65	70	80	55	65	70	80
150	2	49	51	35	23	4,3	6,5	7,6	9,8	104	131	186	242
	1	55	57	39	25	4,0	5,9	6,9	9,0	96	121	170	221
200	2,5	48	50	35	23	5,4	8,2	9,6	12,5	132	166	236	307
	1,25	53	55	38	25	5,1	7,6	8,9	11,5	124	155	218	282
300	3	45	46	32	21	9,3	13,9	16,3	21,1	227	284	400	520
	1,5	49	51	36	23	8,7	12,9	15,0	19,3	213	265	370	477
400	3,5	56	58	40	26	11,0	16,5	19,3	25,0	268	336	474	615
	1,75	60	63	44	29	10,3	15,3	17,8	23,0	254	316	440	568
500	3,5	52	54	38	25	13,1	19,6	22,9	29,7	321	402	565	732
	1,75	57	59	42	27	12,3	18,2	21,1	27,1	302	375	521	671
800	6	75	78	54	36	16,5	24,8	29,0	37,6	404	507	714	928
	3	81	84	59	39	15,5	23,1	26,9	34,7	383	476	665	859
1000	6	81	84	59	39	19,7	29,5	34,5	44,7	484	606	852	1105
	3	89	92	65	43	18,5	27,4	31,9	41,1	456	567	788	1016
1500	6	97	100	71	47	22,9	34,2	40,0	51,7	563	704	988	1279
	3	107	111	79	52	21,4	31,6	36,8	47,2	529	655	909	1168
2000	6	139	144	102	67	25,0	37,3	43,6	56,4	615	769	1077	1394
	3	154	160	114	75	23,3	34,4	39,9	51,2	576	713	988	1268

Model	Primary Flow rate	DHW produced in the first 10 minutes in lt/10' input 10 °C output 45 °C, storage at t2 and primary at T1				DHW produced in the first hour in lt/60' input 10 °C output 45 °C, storage at t2 and primary at T1				Heat exchanger pressure loss	
	[m³/h]	T1/t2				T1/t2				[mm H_2O]	[mbar]
		55/50	65/60	70/60	80/60	55/50	65/60	70/60	80/60		
150	2	188	235	244	253	254	275	319	364	103	10
	1	186	233	241	250	247	267	306	347	30	3
200	2,5	240	301	312	324	324	351	407	464	184	18
	1,25	239	299	309	320	317	342	393	444	53	5
300	3	373	466	485	505	516	562	655	751	349	34
	1,5	370	463	480	498	505	547	631	717	104	10
400	3,5	530	663	686	710	700	755	865	978	538	53
	1,75	528	660	681	702	689	738	838	940	160	16
500	3,5	628	786	813	841	832	896	1026	1160	645	63
	1,75	625	781	805	830	817	875	992	1111	192	19
800	6	935	1169	1203	1239	1191	1273	1439	1610	434	43
	3	931	1164	1195	1227	1173	1248	1400	1554	129	13
1000	6	1112	1390	1431	1473	1418	1516	1712	1915	520	51
	3	1107	1383	1420	1458	1396	1484	1662	1844	155	15
1500	6	1692	2114	2162	2210	2048	2161	2388	2621	607	60
	3	1686	2106	2149	2192	2021	2122	2325	2533	181	18
2000	6	2409	3011	3062	3115	2799	2921	3168	3421	665	65
	3	2402	3002	3048	3094	2767	2877	3097	3321	198	19

BOLLY® **2 ST INOX**

HEAT EXCHANGERS TECHNICAL DATA



Data have been calculated on following basis:
1) Primary circuit at T1 and proper energy source;
2) Production of DHW in continuous way from 10 °C at t2;
3) DHW that can be taken in the first 10' and in the first hour from storage at 60°C, input 10°C and output 45°C;
4) Sanitary water according to UNI CTI 8065.

LOWER
HEAT EXCHANGER

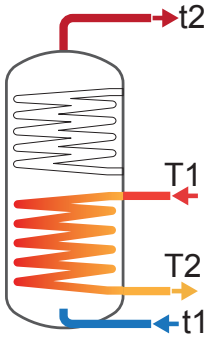

Model	Primary Flow rate	Ignition time (minutes) from 10 °C to t2 and primary at T1				Maximum power exchange (kW) with primary at T1, secondary within 10-45 °C and constant use of DHW production				DHW continuous production lt/h within 10-45 °C and primary at T1			
	[m³/h]	T1/t2				T1				T1			
		55/50	**65/60**	**70/60**	**80/60**	**55**	**65**	**70**	**80**	**55**	**65**	**70**	**80**
150	2	102	106	74	48	6,4	9,6	11,2	14,5	156	235	276	358
	1	115	120	83	55	5,9	8,7	10,2	13,1	144	214	250	322
200	2,5	78	81	57	37	10,7	16,0	18,7	24,1	263	394	460	596
	1,25	88	92	65	43	9,9	14,6	16,9	21,7	243	359	417	536
300	3	99	103	72	47	13,0	19,4	22,6	29,2	318	477	557	721
	1,5	110	115	81	54	12,1	17,7	20,6	26,4	297	438	508	653
400	3,5	97	101	71	47	19,4	28,8	33,6	43,3	477	711	829	1070
	1,75	109	114	81	54	18,0	26,3	30,5	38,9	444	650	753	961
500	3,5	115	119	84	55	19,4	28,8	33,6	43,3	477	711	829	1070
	1,75	129	135	96	64	18,0	26,3	30,5	38,9	444	650	753	961
800	6	113	118	83	55	29,2	43,5	50,7	65,5	719	1074	1254	1619
	3	127	132	94	62	27,1	39,8	46,2	59,1	671	985	1143	1462
1000	6	122	127	90	59	32,3	48,0	56,0	72,2	796	1187	1384	1786
	3	138	144	103	68	30,0	43,8	50,7	64,8	740	1084	1256	1604
1500	6	157	163	116	76	39,4	58,5	68,0	87,5	974	1445	1682	2165
	3	180	188	134	89	36,4	52,8	61,0	77,6	900	1307	1511	1921
2000	6	206	215	153	101	43,5	64,3	74,7	96,0	1074	1590	1849	2376
	3	239	250	179	119	40,0	57,8	66,7	84,6	989	1431	1652	2095

Model	Primary Flow rate	DHW produced in the first 10 minutes in lt/10' input 10 °C output 45 °C, storage at t2 and primary at T1				DHW produced in the first hour in lt/60' input 10 °C output 45 °C, storage at t2 and primary at T1				Heat exchanger pressure loss	
	[m³/h]	T1/t2				T1/t2				[mm H_2O]	[mbar]
		55/50	**65/60**	**70/60**	**80/60**	**55/50**	**65/60**	**70/60**	**80/60**		
150	2	196	252	259	272	295	359	391	456	226	22
	1	194	249	254	267	285	341	370	428	66	6
200	2,5	262	339	350	372	429	533	586	695	528	52
	1,25	259	333	342	362	413	505	552	647	154	15
300	3	388	498	511	539	590	716	781	912	786	77
	1,5	384	491	503	527	572	685	742	857	234	23
400	3,5	565	726	745	786	867	1055	1149	1342	1545	151
	1,75	560	715	733	767	841	1006	1088	1255	459	45
500	3,5	654	837	857	897	956	1144	1238	1431	1545	151
	1,75	649	827	844	879	930	1095	1177	1344	459	45
800	6	987	1263	1293	1354	1443	1727	1871	2163	1110	109
	3	979	1248	1275	1328	1404	1655	1781	2037	330	32
1000	6	1164	1486	1519	1586	1668	1981	2138	2460	1233	121
	3	1154	1469	1498	1556	1623	1898	2035	2314	367	36
1500	6	1760	2238	2278	2358	2377	2754	2944	3330	1521	149
	3	1748	2215	2249	2317	2318	2644	2806	3135	452	44
2000	6	2485	3148	3191	3279	3166	3578	3786	4207	1686	165
	3	2471	3121	3158	3232	3098	3451	3627	3982	501	49



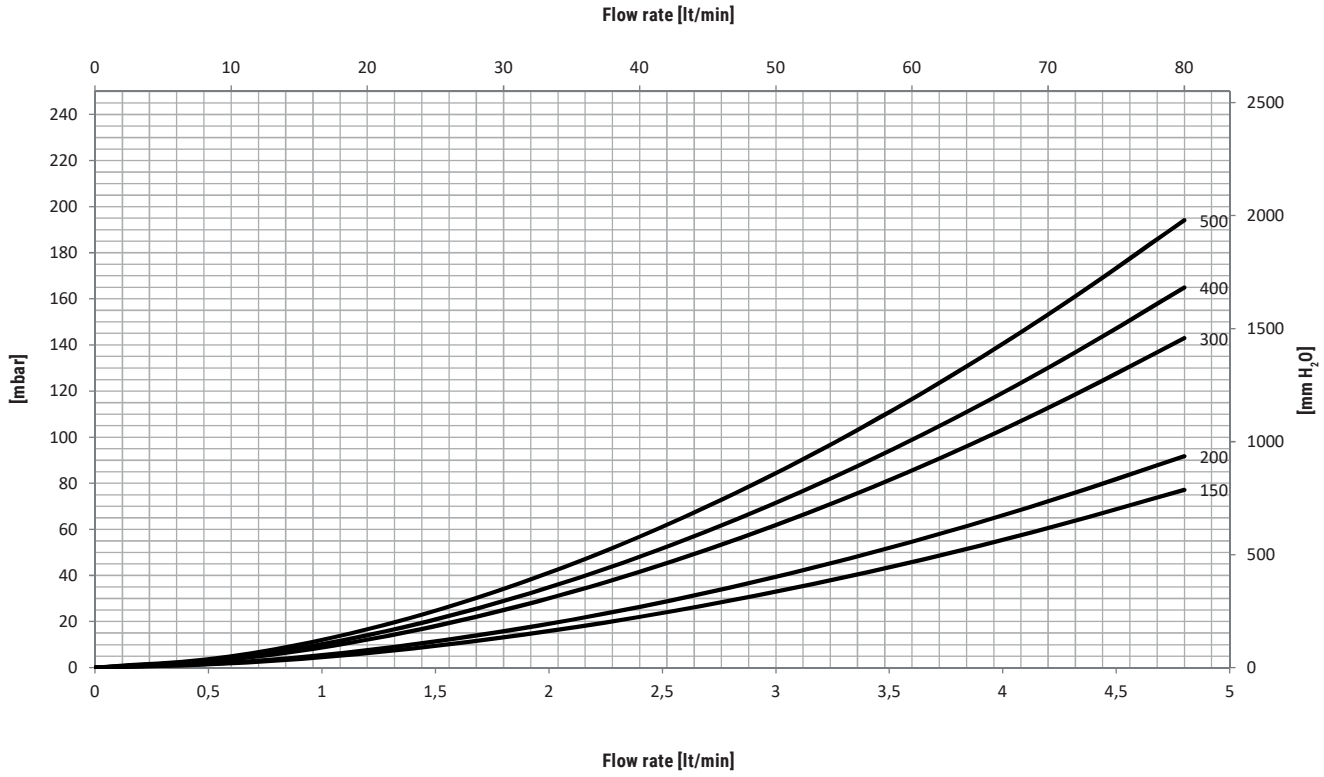
Flow rate [lt/min]
0 10 20 30 40 50 60 70 80
240 220 200 180 160 140 120 100 80 60 40 20 0
[mbar]
2500 2000 1500 1000 500 0
[mm H2O]
500
400
300
200
150
0 0,5 1 1,5 2 2,5 3 3,5 4 4,5 5
Flow rate [lt/min]

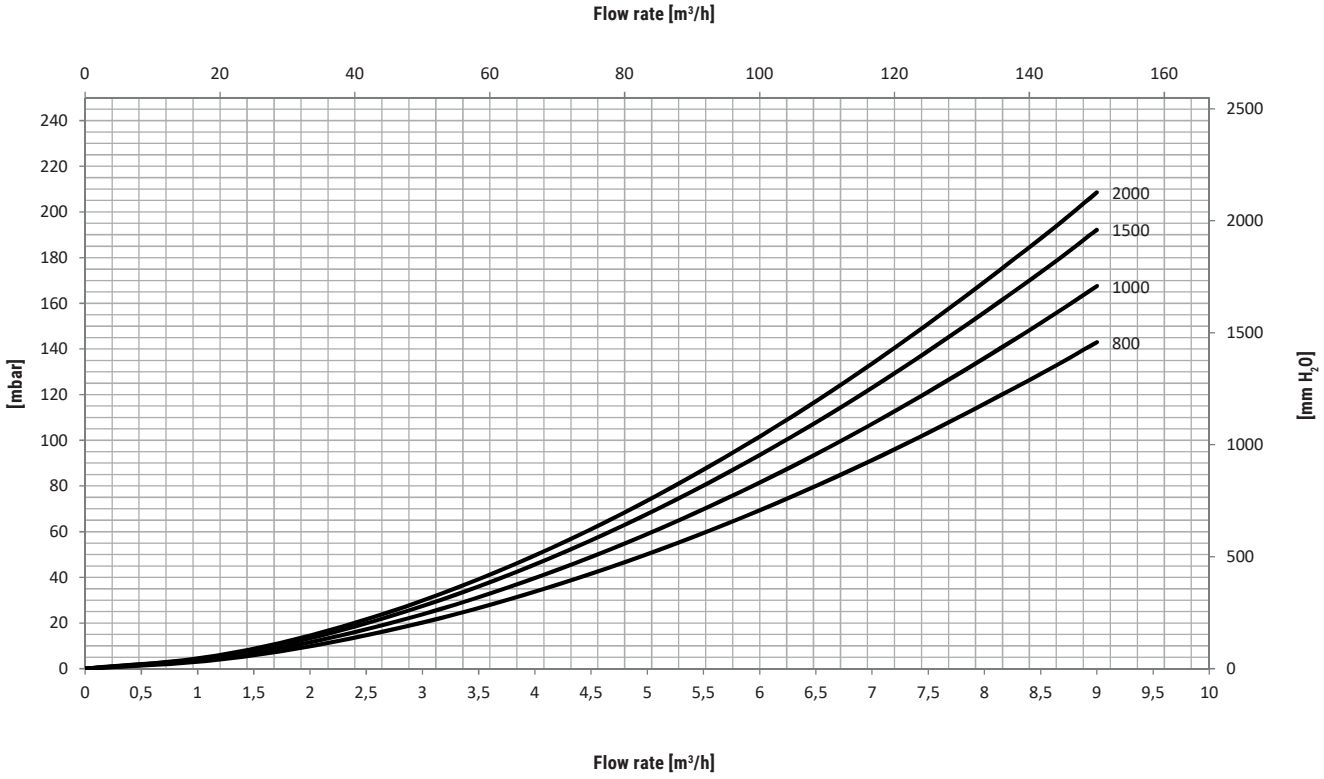
Flow rate [m³/h]
0 20 40 60 80 100 120 140 160
240 220 200 180 160 140 120 100 80 60 40 20 0
[mbar]
2500 2000 1500 1000 500 0
[mm H2O]
2000
1500
1000
800
0 0,5 1 1,5 2 2,5 3 3,5 4 4,5 5 5,5 6 6,5 7 7,5 8 8,5 9 9,5 10
Flow rate [m³/h]

BOLLY® **2 ST INOX**

UPPER HEAT EXCHANGERS TECHNICAL DATA



Heat Exchanger output referred to temperature and flow rate of primary circuit and with secondary at 10/45°C at maximum withdrawal of producible DHW (Upper limit of the curves referred to maximum primary flow rate in the heat exchanger, while the lower limit in the curves refer to the minimum primary flow rate)
For Lower heat exchangers technical data- see Bolly® 1 ST INOX

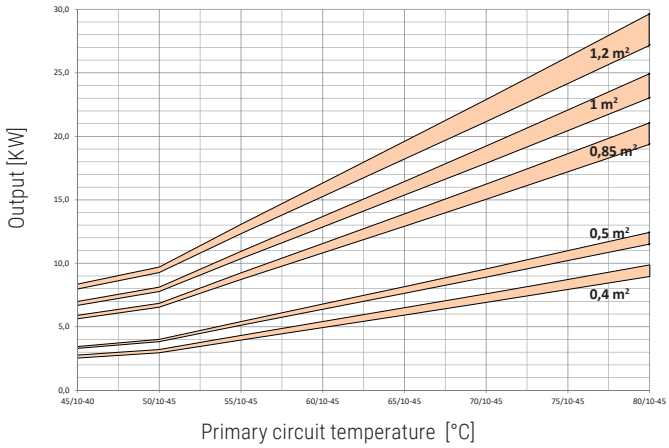

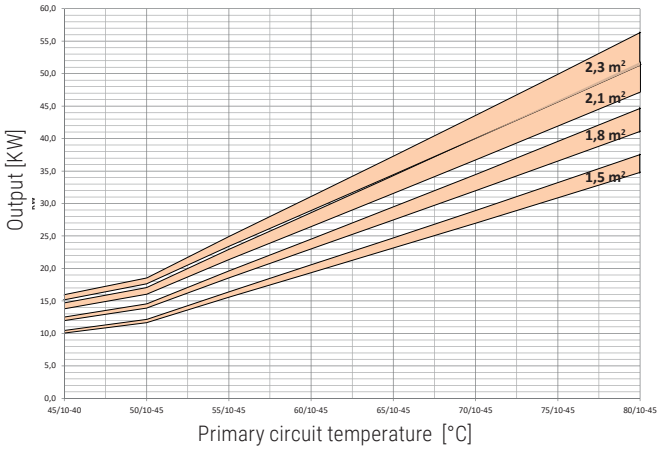

Heat exchanger surface [m²]	0,4		0,5		0,85		1		1,2	
Flow rate [m³/h]	MAX	MIN	MAX	MIN	MAX	MIN	MAX	MIN	MAX	MIN
	2	1	2,5	1,25	3	1,5	3,5	1,75	3,5	1,75

Heat exchanger surface [m²]	1,5		1,8		2,1		2,3	
Flow rate [m³/h]	MAX	MIN	MAX	MIN	MAX	MIN	MAX	MIN
	6	3	6	3	6	3	6	3

EXAMPLE OF INSTALLATION WITH **BOLLY® 2 ST INOX**

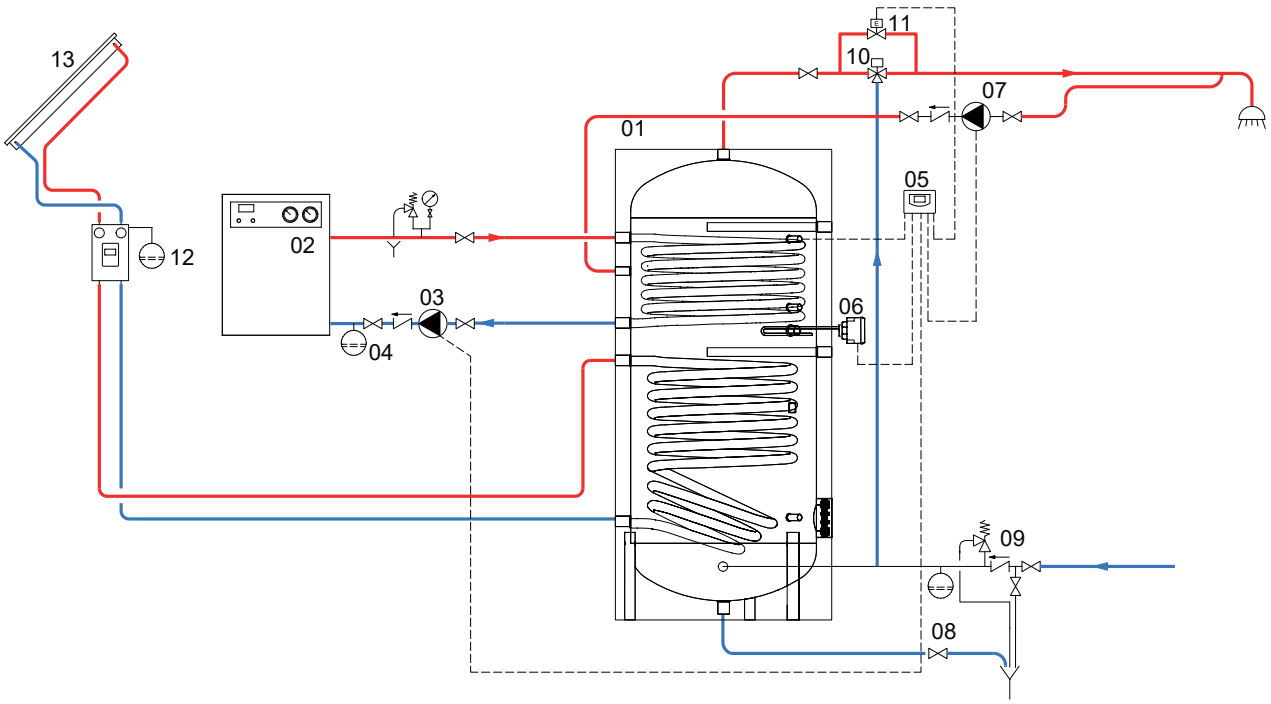

1	Bolly® 2 St	5	Easy Control electronic display/ thermostat	9	Hydraulic safety group	13	Solar panels
2	generator	6	Electric immersion heater (optional)	10	Thermostatic mixing valve		
3	Circulation group	7	D.H.W. recirculation group	11	By-pass solenoid valve		
4	Expansion vessel	8	Blowdown valve	12	Solar system circulation group		

BOLLY® 1 XL INOX

STAINLESS STEEL 316L DOMESTIC HOT WATER CALORIFIER WITH 1 FIXED OVERSIZE STAINLESS STEEL HEAT EXCHANGER WITH DOUBLE SPIRAL COIL



APPLICATION
Production and storage of domestic hot water (DHW).
MATERIAL
Stainless Steel 316 L suitable for domestic hot water
HEAT EXCHANGER
N° 1 fixed oversize stainless steel heat exchanger with double spiral coil.
INSULATION
- HARD: High thermal insulation with ecological polyurethane hard foam.
- SOFT: NOFIRE® polyester fleece 100% made of recyclable material, with high thermal insulation. Fire resistance class B-s2d0 according to EN 13501. Grey PVC external lining.

CATHODE PROTECTION
Magnesium anode.
DRAIN
External confluence through drain connection.
GASKET- FLANGE PLATE
Silicone gaskets suitable for water intended for human consumption (tested according to 98/83/CE), max temperature up to 200°C. Stainless steel exchanger head.
WARRANTY
5 years - See general sales conditions and warranty
ACCESSORIES AND SPARE PARTS
See Accessories section for the entire list.



BOLLY® 1 XL XB

Model	HARD FOAM insulation	HEAT EXCHANGER SURFACE	ENERGY EFFICIENCY CLASS
	Art. Nr.	[m²]	
200	3105052300001	1,95	**B**
300	3105052300002	3,5	**B**
500	3105052300003	5,5	**C**



cordivari.com/erp



On line ErP label tool

BOLLY® 1 XL XC

Model	DISMOUNTABLE SOFT FLEECE insulation	HEAT EXCHANGER SURFACE	ENERGY EFFICIENCY CLASS
	Art. Nr.	[m²]	
800	3105052300016	6	**C**
1000	3105052300018	6	**C**

For technical data and performance charts see CALORIFIERS FOR HEAT PUMPS section

ACCESSORIES

ELECTRIC IMMERSION HEATERS

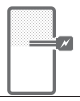

Mod.	Heated volume by electric immersion heater [lt]	MONOPHASE 1,5 kW	MONOPHASE 2 kW	MONOPHASE 3 kW
		5240000000051	5240000000052	5240000000053
		Ignition time from 10 °C to 45 °C with electric immersion heaters [min]		
200	67	120	90	60
300	72	129	97	64
500	114	204	153	102
800	232	416	312	208
1000	346	620	465	310

"Easy Control" Electronic Display-mounted on tank

ART. NR.	FOR MODELS
5005000310002	XC
5005000310003	XB



Thermometer

Art. Nr.
5032240000107
5 units box



P.E.D. product designed and produced in conformity to the article 4.3 of directive 2014/68/UE - ErP Ecodesgin directive 2009/125/CE

BOLLY® **1 XL INOX**

STAINLESS STEEL 316L DOMESTIC HOT WATER CALORIFIER WITH 1 FIXED OVERSIZE STAINLESS STEEL HEAT EXCHANGER WITH DOUBLE SPIRAL COIL

STORAGE		HEAT EXCHANGER	
Pmax	Tmax	Pmax	Tmax
6 bar	95 °C	12 bar	110 °C

CORDIVARI Lab

TÜV Rheinland Energie und Umwelt GmbH states that test procedures and Cordivari LAB are certified conforming to European standard EN 15332, as indicated by Ecodesign ErP Directive.

TESTED ErP

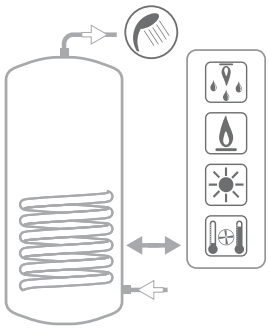

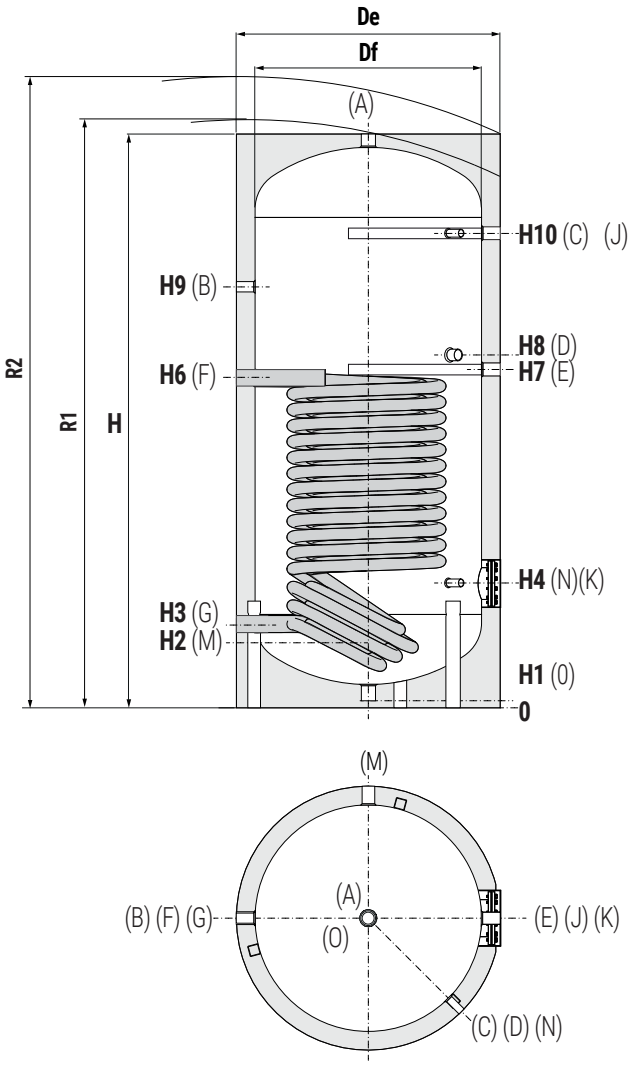

A	Domestic hot water circuit outlet
B	Recirculation 1" F
C	Connection for instrumentation 1/2" F
D	Connection for electric immersion heater
E	Connection for magnesium anode 1"1/4 F
F	Primary circuit inlet 1"1/4 F
G	Primary circuit outlet 1"1/4 F
K	Blind flange for inspection
M	Domestic cold water circuit inlet
N	Connection for instrumentation 1/2" F
O	Drain
12	Domestic hot water outlet

BOLLY® 1 XL INOX - HARD FOAM INSULATION (XB)

Model	Volume	De	H	R2	H1	H2	H3	H4	H6	H7	H8	H9	H10	K	A	D	M	O
	[lt]	[mm]													Connections F			
200	191	550	1446	1547	71	206	296	326	713	866	926	1100	1206	Øi120/Øe180	1"	1"1/2	1"	1/2"
300	293	650	1501	1636	76	236	326	386	1022	1036	1096	1176	1236	Øi120/Øe180	1"	1"1/2	1"	1/2"
500	503	750	1796	1946	71	256	356	411	1232	1272	1340	1396	1496	Øi120/Øe180	1"	1"1/2	1"	1/2"

BOLLY® 1 XLINOX - DISMOUNTABLE SOFT FLEECE INSULATION (XC)

Model	Volume	Df	De	H	R1	R2	H1	H2	H3	H4	H6	H7	H8	H9	H10	K	A	D	M	O
	[lt]	[mm]															Connections F			
300	759	790	1010	1943	2105	2195	114	323	423	478	1151	1223	1293	1331	1533	Øi120/Øe180	1"1/4	2"	1"	3/4"
500	902	800	1020	2192	2340	2425	112	317	412	477	1225	1282	1337	1557	1792	Øi120/Øe180	1"1/2	2"	1"1/4	3/4"

P.E.D. product designed and produced in conformity to the article 4.3 of directive 2014/68/UE - ErP Ecodesgin directive 2009/125/CE

BOLLY® **2 XL INOX**

STAINLESS STEEL 316L DOMESTIC HOT WATER CALORIFIER WITH 2 FIXED OVERSIZE STAINLESS STEEL HEAT EXCHANGERS WITH DOUBLE SPIRAL COIL



APPLICATION
Production and storage of domestic hot water (DHW).
MATERIAL
Stainless Steel 316 L suitable for domestic hot water
HEAT EXCHANGER
N° 2 fixed oversize stainless steel heat exchanger with double spiral coil.
INSULATION
- HARD: High thermal insulation with ecological polyurethane hard foam.
- SOFT: NOFIRE® polyester fleece 100% made of recyclable material, with high thermal insulation. Fire resistance class B-s2d0 according to EN 13501. Grey PVC external lining.

CATHODE PROTECTION
Magnesium anode.
DRAIN
External confluence through drain connection.
GASKET- FLANGE PLATE
Silicone gaskets suitable for water intended for human consumption (tested according to 98/83/CE), max temperature up to 200°C. Stainless steel exchanger head.
WARRANTY
5 years - See general sales conditions and warranty
ACCESSORIES AND SPARE PARTS
See Accessories section for the entire list.





cordivari.com/erp



On line ErP label tool



BOLLY® 2 XL XB

Model	HARD FOAM insulation	HEAT EXCHANGER SURFACE Upper	Lower	ENERGY EFFICIENCY CLASS
	Art. Nr.	[m²]		
200	3135052010212	1,4	0,6	**B**
300	3135052010203	2,4	1	**B**
500	3135052010215	4,0	1,4	**C**



BOLLY® 2 XL XC

Model	DISMOUNTABLE SOFT FLEECE insulation	HEAT EXCHANGER SURFACE Upper	Lower	ENERGY EFFICIENCY CLASS
	Art. Nr.	[m²]		
800	3135052010218	5	1,8	**C**
1000	3135052010219	6	3,0	**C**

For technical data and performance charts see CALORIFIERS FOR HEAT PUMPS section

ACCESSORIES

ELECTRIC IMMERSION HEATERS

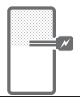

Mod.	Heated volume by electric immersion heater [lt]	MONOPHASE 1,5 kW	2 kW	3 kW
		5240000000051	5240000000052	5240000000053
		Ignition time from 10 °C to 45 °C with electric immersion heaters [min]		
200	98	176	132	88
300	169	274	206	137
500	305	496	372	248
800	420	752	564	376
1000	534	956	717	478

"Easy Control" Electronic Display-mounted on tank

ART. NR.	FOR MODELS
5005000310002	XC
5005000310003	XB



Thermometer

Art. Nr.
5032240000107
5 units box



P.E.D. product designed and produced in conformity to the article 4.3 of directive 2014/68/UE - ErP Ecodesgin directive 2009/125/CE

BOLLY® **2 XL INOX**

STAINLESS STEEL 316L DOMESTIC HOT WATER CALORIFIER
WITH 2 FIXED OVERSIZE STAINLESS STEEL HEAT EXCHANGERS WITH DOUBLE SPIRAL COIL

STORAGE		HEAT EXCHANGER	
Pmax	Tmax	Pmax	Tmax
6 bar	95 °C	12 bar	110 °C

CORDIVARI Lab

TÜV Rheinland Energie und Umwelt GmbH states that test procedures and Cordivari LAB are certified conforming to European standard EN 15332, as indicated by Ecodesign ErP Directive.

TESTED ErP

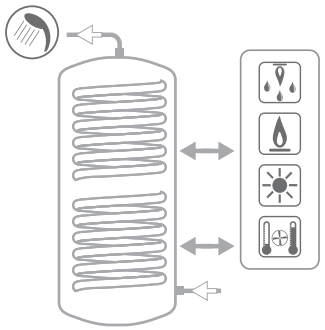

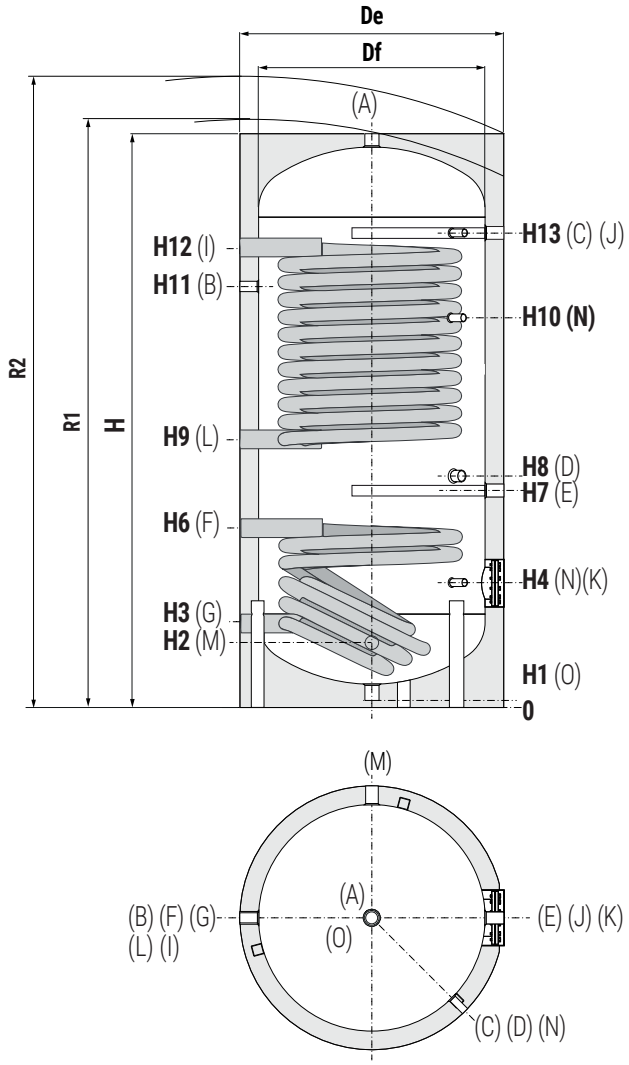

A	Domestic hot water outlet
B	Recirculation 1" F
C	Connection for instrumentation 1/2" F
D	Connection for electric immersion heater
E	Connection for magnesium anode 1"1/4 F
F	Upper heat exchanger inlet 1"1/4 F
G	Lower heat exchanger outlet 1"1/4 F
I	Upper heat exchanger inlet 1"1/4 F
K	Blind flange for inspection
L	Upper heat exchanger outlet 1"1/4 F
M	Domestic cold water circuit inlet
N	Connection for instrumentation 1/2" F
O	Drain

BOLLY® 2 XL - HARD FOAM INSULATION (XB)

Model	Vol.	De	H	R2	H1	H2	H3	H4	H6	H7	H8	H9	H10	H11	H12	H13	K	A	D	M	O
	[lt]	[mm]																Connections F			
200	191	550	1446	1555	71	206	296	326	533	646	726	801	886	1046	1206	960	Øi120/Øe180	1"	1"1/2	1"	1/2"
300	293	650	1501	1640	76	236	326	386	572	626	706	741	1096	989	1236	1236	Øi120/Øe180	1"	1"1/2	1"	1/2"
500	503	750	1796	1955	71	256	356	411	601	686	766	810	1299	1148	1485	1496	Øi120/Øe180	1"	1"1/2	1"	1/2"

BOLLY® 2 XL - DISMOUNTABLE SOFT FLEECE INSULATION (XC)

Model	Vol.	Df	De	H	R1	R2	H1	H2	H3	H4	H6	H7	H8	H9	H10	H11	H12	H13	K	A	D	M	O
	[lt]	[mm]																		Connections F			
800	759	790	1010	1943	2105	2195	114	323	423	478	664	696	756	800	1383	1213	1548	1568	Øi120/Øe180	1"1/4	2"	1"	3/4"
1000	902	800	1020	2192	2340	2425	112	317	412	477	873	908	963	1008	1564	1452	1756	1792	Øi120/Øe180	1"1/2	2"	1"1/4	3/4"

P.E.D. product designed and produced in conformity to the article 4.3 of directive 2014/68/UE - ErP Ecodesgin directive 2009/125/CE

COMBI **1 INOX**

MULTI-HEAT ENERGY BUFFER WITH STAINLESS STEEL 316L TANK IN TANK CALORIFIER



APPLICATION
Heating hot water storage and D.H.W. production.
MATERIAL
Buffer tank: Mild steel construction with exterior paint. No anti-corrosion treatment required due to the buffer's closed circuit system.
D.H.W. storage: Stainless steel 316L
INSULATION
High thermal insulation with ecological polyurethane hard foam.
Grey PVC external lining.
TECHNICAL DESCRIPTION
Multi-Heat Energy tanks Combi1 are used in units with a typically discontinuous energy source for double use: heating system and domestic hot water system.

CATHODE PROTECTION
Chain magnesium anode
WARRANTY
5 years - See general sales conditions and warranty
ACCESSORIES AND SPARE PARTS
See Accessories section for the entire list.

316L
STAINLESS STEEL
DHW STORAGE



cordivari.com/erp



On line ErP label tool

COMBI 1 XB

Model	**HARD FOAM** insulation	Volume	Surface	ErP
	Art. Nr.	[lt]	[m²]	
500	3270162314051	99	1,1	**C**
600	3270162314052	146	1,3	**C**

STAINLESS STEEL 316L DHW STORAGE

ENERGY EFFICIENCY CLASS

COMBI 1 XB

Model	**DISMOUNTABLE HARD FOAM** insulation	Volume	Surface	ErP
	Art. Nr.	[lt]	[m²]	
800	3270162314053	191	1,6	**C**
1000	3270162314054	226	1,8	**C**

ACCESSORIES

Thermometer

Art. Nr.
5032240000107
5 units box



Chain magnesium anode (connection 3/4")

Art. Nr.	For models
5200000041007	800,1000
5200000041016	500,600
N° 2 chain anodes + insulated cap + gasket	

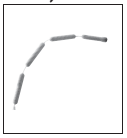

Buffer tanks connecting kit

Art. Nr.	Connection
5006170001001	1" 1/2
Stainless steel extensible connecting kit - (200 ÷ 400 mm)	



P.E.D. product designed and produced in conformity to the article 4.3 of directive 2014/68/UE - ErP Ecodesgin directive 2009/125/CE

COMBI **1 INOX**

MULTI-HEAT ENERGY BUFFER WITH STAINLESS STEEL 316L TANK IN TANK CALORIFIER

TECHNICAL STORAGE		D.H.W. STORAGE	
Pmax	Tmax	Pmax	Tmax
3 bar	99 °C	6 bar	95 °C

CORDIVARI Lab

TÜV Rheinland Energie und Umwelt GmbH states that test procedures and Cordivari LAB are certified conforming to European standard EN 15332, as indicated by Ecodesign ErP Directive.

TESTED ErP

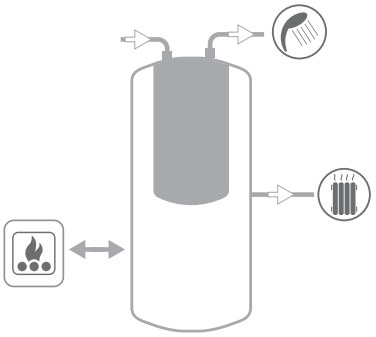

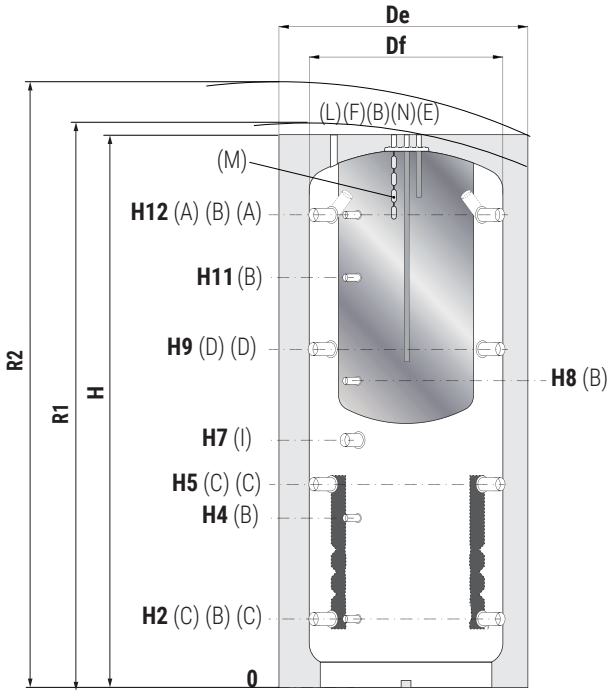

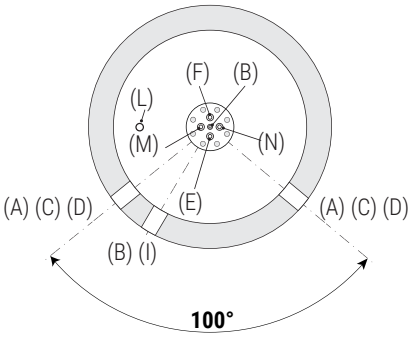

A	Heating delivery/From generator 1"1/2 F
B	Connection for instrumentation 1/2" F
C	Heating return/to generator 1"1/2 F
D	Heating delivery 1"1/2 F
E	Domestic hot water outlet 3/4" F
F	Domestic cold water circuit inlet 3/4" F
I	Connection for electric immersion heater 1"1/2 F
L	Air purge 1/2" F
M	Chain magnesium anode 3/4" F
N	Recirculation 3/4" F

CALORIFIERS IN STAINLESS STEEL

Dismountable insulation

Model	Volume	Df	De	H	R1	R2	H2	H4	H5	H7	H8	H9	H11	H12
	[lt]	[mm]												
500	478	//	750	1670	//	1835	247	533	629	841	930	1011	1231	1343
600	560	//	750	1920	//	2070	247	582	695	915	1060	1144	1382	1593
800	805	790	950	1855	1900	2120	265	584	690	823	988	1115	1332	1541
1000	946	790	950	2150	2180	2380	265	656	787	998	1188	1309	1588	1831

P.E.D. product designed and produced in conformity to the article 4.3 of directive 2014/68/UE - ErP Ecodesgin directive 2009/125/CE

COMBI **2 INOX**

MULTI-HEAT ENERGY BUFFER WITH STAINLESS STEEL 316L TANK IN TANK CALORIFIER AND 1 FIXED HEAT EXCHANGER



APPLICATION
Heating hot water storage and D.H.W. production.
MATERIAL
Buffer tank: Mild steel construction with exterior paint. No anti-corrosion treatment required due to the buffer's closed circuit system.
D.H.W. storage: Stainless steel 316L
HEAT EXCHANGER
N° 1 fixed heat exchanger.
TECHNICAL DESCRIPTION
Multi-Heat Energy tanks Combi2 are used in units with a typically discontinuous energy source for double use: heating systems and domestic hot water systems.

INSULATION
High thermal insulation with ecological polyurethane hard foam. Grey PVC external lining.
CATHODE PROTECTION
Chain magnesium anode
WARRANTY
5 years - See general sales conditions and warranty
ACCESSORIES AND SPARE PARTS
See Accessories section for the entire list.

316L
STAINLESS STEEL
DHW STORAGE

cordivari.com/erp



On line ErP label tool



COMBI 2 XB

Model	**HARD FOAM** insulation	STAINLESS STEEL 316L DHW STORAGE Volume	STAINLESS STEEL 316L DHW STORAGE Surface	HEAT EXCHANGER Volume	HEAT EXCHANGER Surface	ENERGY EFFICIENCY CLASS
	Art. Nr.	[lt]	[m²]	[lt]	[m²]	ErP
500	3270162314151	99	1,1	11,5	1,9	**C**
600	3270162314152	146	1,3	18	2,8	**C**

Model	**DISMOUNTABLE HARD FOAM** insulation	Volume	Surface	Volume	Surface	ErP
	Art. Nr.	[lt]	[m²]	[lt]	[m²]	
800	3270162314153	191	1,6	20	3,1	**C**
1000	3270162314154	226	1,8	24	3,7	**C**

ACCESSORIES

Thermometer

Art. Nr.
5032240000107
5 units box



Chain magnesium anode (connection 3/4")

Art. Nr.	For models
5200000041007	800,1000
5200000041016	500,600
N° 2 chain anodes + insulated cap + gasket	

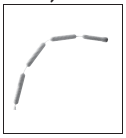

Buffer tanks connecting kit

Art. Nr.	Connection
5006170001001	1" 1/2
Stainless steel extensible connecting kit - (200 ÷ 400 mm)	



P.E.D. product designed and produced in conformity to the article 4.3 of directive 2014/68/UE - ErP Ecodesgin directive 2009/125/CE

COMBI **2 INOX**

MULTI-HEAT ENERGY BUFFER WITH STAINLESS STEEL 316L TANK IN TANK CALORIFIER AND 1 FIXED HEAT EXCHANGER

TECHNICAL STORAGE		D.H.W. STORAGE		FIXED HEAT EXCHANGER	
Pmax	Tmax	Pmax	Tmax	Pmax	Tmax
3 bar	99 °C	6 bar	95 °C	12 bar	110 °C

CORDIVARI Lab

TÜV Rheinland Energie und Umwelt GmbH states that test procedures and Cordivari LAB are certified conforming to European standard EN 15332, as indicated by Ecodesign ErP Directive.

TESTED ErP

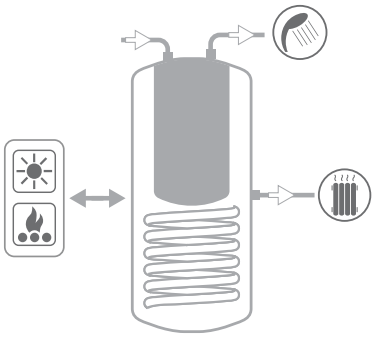

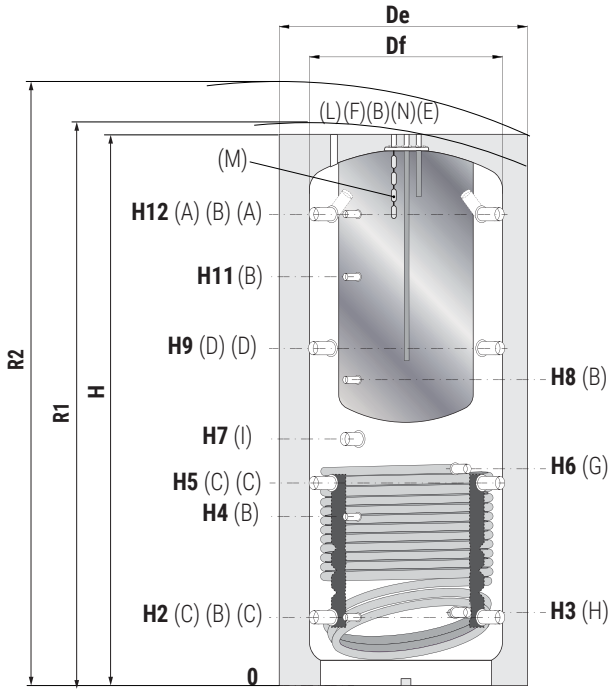

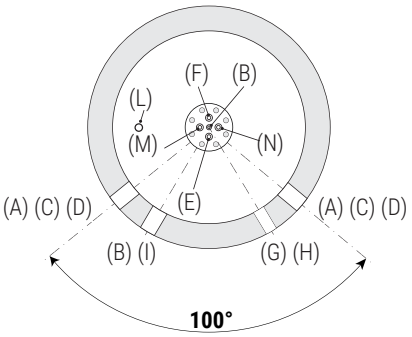

A	Heating delivery/From generator 1"1/2 F
B	Connection for instrumentation 1/2" F
C	Heating return/to generator 1"1/2 F
D	Heating delivery 1"1/2 F
E	Domestic hot water outlet 3/4" F
F	Domestic cold water circuit inlet 3/4" F
G	Heat exchanger inlet 1" F
H	Heat exchanger outlet 1" F
I	Connection for electric immersion heater 1"1/2 F
L	Air purge 1/2" F
M	Chain magnesium anode 3/4" F
N	Recirculation 3/4" F



Model	Volume	Df	De	H	R1	R2	H2	H3	H4	H5	H6	H7	H8	H9	H11	H12
	[lt]	[mm]														
500	478	//	750	1670	//	1835	247	260	533	629	744	841	930	1011	1231	1343
600	560	//	750	1920	//	2070	247	260	582	695	855	915	1060	1144	1382	1593
800	805	790	950	1855	1900	2120	265	278	584	690	762	823	988	1115	1332	1541
1000	946	790	950	2150	2180	2380	265	284	656	787	953	998	1188	1309	1588	1831

P.E.D. product designed and produced in conformity to the article 4.3 of directive 2014/68/UE - ErP Ecodesgin directive 2009/125/CE

COMBI **3 INOX**

MULTI-HEAT ENERGY BUFFER WITH STAINLESS STEEL 316L TANK IN TANK CALORIFIER AND 2 FIXED HEAT EXCHANGERS



APPLICATION
Heating hot water storage and D.H.W. production.
MATERIAL
Buffer tank: Mild steel construction with exterior paint. No anti-corrosion treatment required due to the buffer's closed circuit system.
D.H.W. storage: Stainless steel 316L
HEAT EXCHANGERS
N° 2 fixed heat exchangers.
TECHNICAL DESCRIPTION
Multi-Heat Energy tanks Combi3 are used in units with a typically discontinuous energy source for double use: heating systems and domestic hot water systems.

INSULATION
High thermal insulation with ecological polyurethane hard foam. Grey PVC external lining.
CATHODE PROTECTION
Chain magnesium anode
WARRANTY
5 years - See general sales conditions and warranty
ACCESSORIES AND SPARE PARTS
See Accessories section for the entire list.

316L
STAINLESS STEEL
DHW STORAGE

cordivari.com/erp



On line ErP label tool



COMBI 3 XB

Model	HARD FOAM insulation	STAINLESS STEEL 316L DHW STORAGE Volume	Surface	UPPER HEAT EXCHANGER Volume	Surface	LOWER HEAT EXCHANGER Volume	Surface	ENERGY EFFICIENCY CLASS ErP
	Art. Nr.	[lt]	[m²]	[lt]	[m²]	[lt]	[m²]	
500	3270162314251	99	1,1	8	1,3	11,5	1,9	**C**
600	3270162314252	146	1,3	12	1,9	18	2,8	**C**

Model	DISMOUNTABLE HARD FOAM insulation	Volume	Surface	Volume	Surface	Volume	Surface	ErP
	Art. Nr.	[lt]	[m²]	[lt]	[m²]	[lt]	[m²]	
800	3270162314253	191	1,6	16	2,4	20	3,1	**C**
1000	3270162314254	226	1,8	20	3,1	24	3,7	**C**

ACCESSORIES

Thermometer

Art. Nr.
5032240000107
5 units box



Chain magnesium anode (connection 3/4")

Art. Nr.	For models
5200000041007	800,1000
5200000041016	500,600
N° 2 chain anodes + insulated cap + gasket	

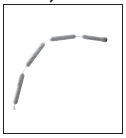

Buffer tanks connecting kit

Art. Nr.	Connection
5006170001001	1" 1/2
Stainless steel extensible connecting kit - (200 ÷ 400 mm)	



P.E.D. product designed and produced in conformity to the article 4.3 of directive 2014/68/UE - ErP Ecodesgin directive 2009/125/CE

COMBI **3 INOX**

MULTI-HEAT ENERGY BUFFER WITH STAINLESS STEEL 316L TANK IN TANK CALORIFIER AND 2 FIXED HEAT EXCHANGERS

TECHNICAL STORAGE		D.H.W. STORAGE		FIXED HEAT EXCHANGER	
Pmax	Tmax	Pmax	Tmax	Pmax	Tmax
3 bar	99 °C	6 bar	95 °C	12 bar	110 °C

CORDIVARI Lab

TÜV Rheinland Energie und Umwelt GmbH states that test procedures and Cordivari LAB are certified conforming to European standard EN 15332, as indicated by Ecodesign ErP Directive.

TESTED ErP

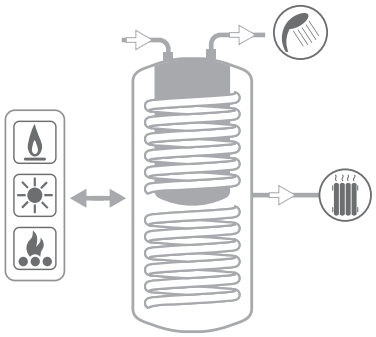

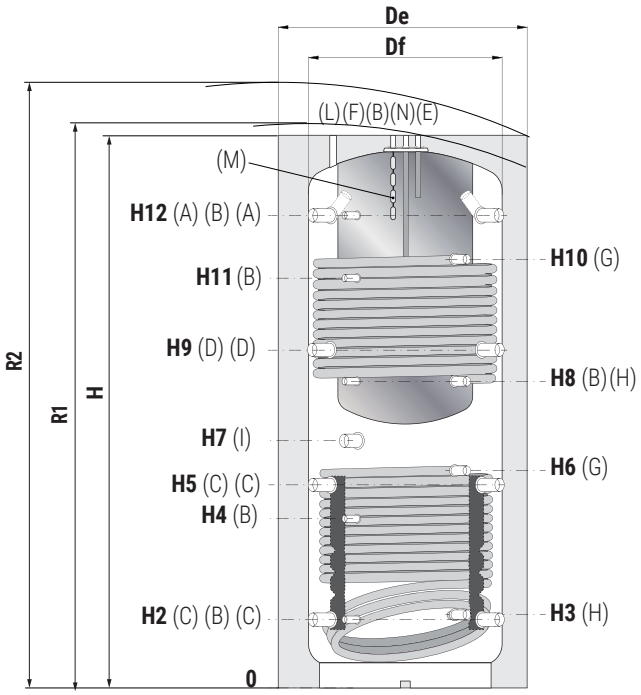

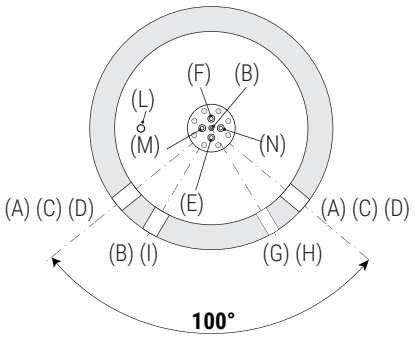

A	Heating delivery/From generator 1"1/2 F
B	Connection for instrumentation 1/2" F
C	Heating return/to generator 1"1/2 F
D	Heating delivery 1"1/2 F
E	Domestic hot water outlet 3/4" F
F	Domestic cold water circuit inlet 3/4" F
G	Heat exchanger inlet 1" F
H	Heat exchanger outlet 1" F
I	Connection for electric immersion heater 1"1/2 F
L	Air purge 1/2" F
M	Chain magnesium anode 3/4" F
N	Recirculation 3/4" F



Model	Volume	Df	De	H	R1	R2	H2	H3	H4	H5	H6	H7	H8	H9	H10	H11	H12
	[lt]	[mm]															
500	478	//	750	1670	//	1835	247	260	533	629	744	841	930	1011	1231	1231	1343
600	560	//	750	1920	//	2070	247	260	582	695	855	915	1060	1144	1500	1382	1593
800	805	790	950	1855	1900	2120	265	278	584	690	762	823	988	1115	1428	1332	1541
1000	946	790	950	2150	2180	2380	265	284	656	787	953	998	1188	1309	1748	1588	1831

P.E.D. product designed and produced in conformity to the article 4.3 of directive 2014/68/UE - ErP Ecodesgin directive 2009/125/CE

CALORIFIERS FOR HEAT PUMPS

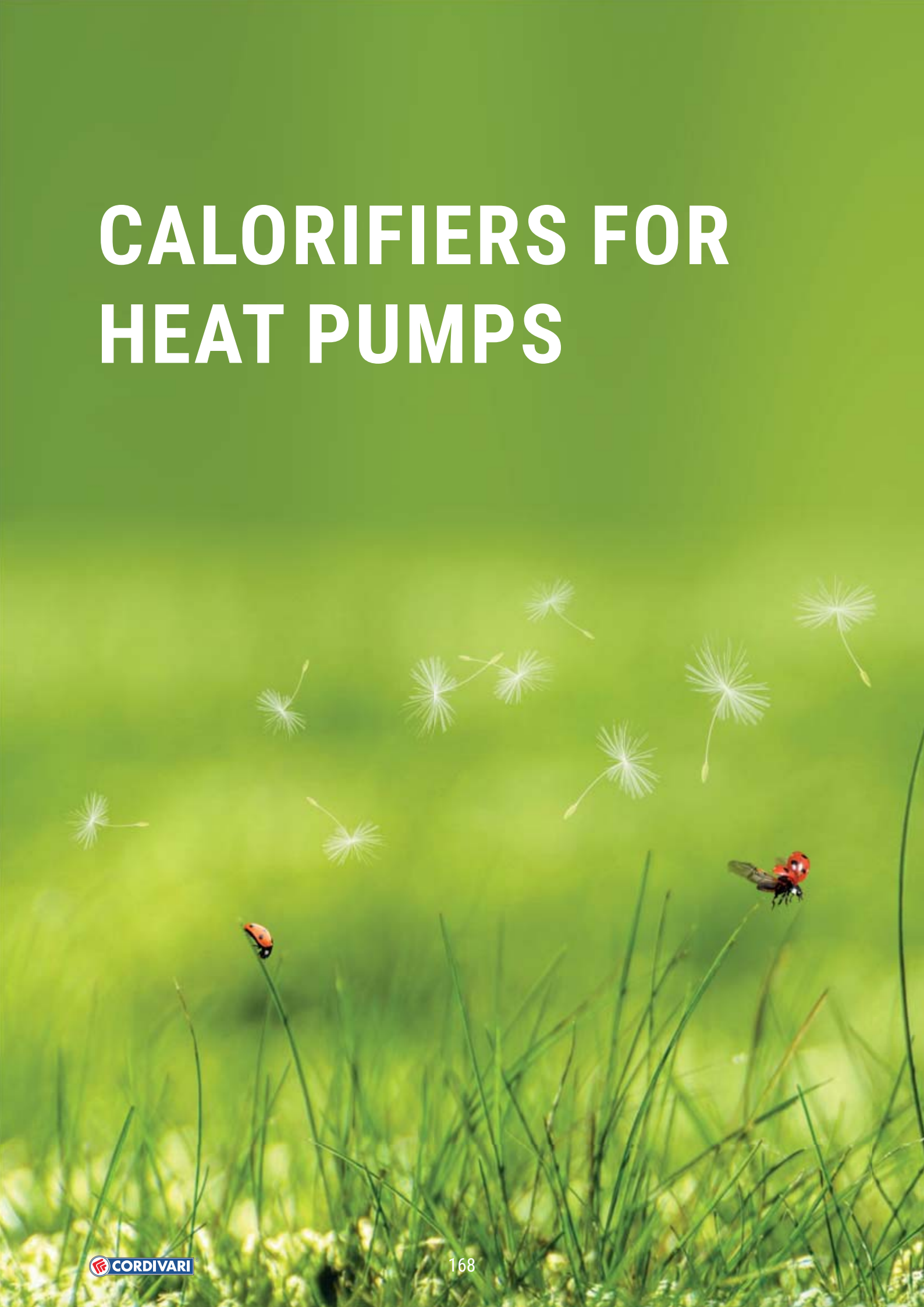



CALORIFIERS FOR HEAT PUMP RANGE

DHW production







	BOLLY® PDC	BOLLY® XL (Polywarm®)	BOLLY® XL (Stainless steel 316L)
Heat exchanger model	- Patented heat-exchange module -Fixed coil heat exchanger	Fixed coil heat exchanger	Fixed coil heat exchanger
Number of heat exchangers			
Energy source			
Energy efficiency class	**B-C**	**B-C**	**B-C**
Insulation	Polyurethane hard foam	- Polyurethane hard foam - Dismountable polyester fleece	- Polyurethane hard foam - Dismountable polyester fleece
Available range	300 ÷ 800	200 ÷ 1000	200 ÷ 1000
Installation	floor standing	floor standing	floor standing
Suggested Application	Heat pump and other energy source installations	Heat pump and other energy source installations	Heat pump and other energy source installations

		
BOLLY® HY	PUFFERMAS® DOMUS	ECO-COMBI PDC
- Fixed coil heat exchanger -Integrated buffer tank for primary circuit	- MACS® module for DHW production	- Fixed coil heat exchanger - Corrugated Stainless steel 316L coil for D.H.W. production
		
		
B-C	**B**	**B-C**
Polyurethane hard foam	Polyurethane hard foam	Polyurethane hard foam
300,500	200,300	300 ÷ 800
floor standing	floor standing	floor standing
Heat pump and other energy source installations	Heat pump and other energy source installations	Heat pump and other energy source installations

BOLLY® **1 PDC**

POLYWARM® COATED DHW PRODUCTION TANK FOR HEAT PUMP



APPLICATION
Production and storage of domestic hot water (DHW).
MATERIAL
Mild steel Polywarm® coated (Attestation ACS - SSICA - DVGW - W270 - WRAS)
EXCHANGE MODULE
Counter-flow heat exchanger system with heat load from the top.
CIRCULATION PUMP
A pump is embedded on the top of the tank to allow the circulation of sanitary water through the plate heat exchanger, only when the heat pump is running. Circulator speed: 1450/2450 (min/max) n rpm; Power consumption: 45/85 (min/max) W; Current drawn 0,21/0,38 (min/max); Power supply 230V/1Ph/50Hz.
INSULATION
High thermal insulation with ecological polyurethane hard foam.
Grey PVC external lining.

CATHODE PROTECTION
Magnesium anode.
DRAIN
External confluence through drain connection.
GASKET- FLANGE PLATE
Silicone gaskets suitable for water intended for human consumption (tested according to 98/83/CE), max temperature up to 200°C. Inspection flange
WARRANTY
5 years (tank)
See general sales conditions and warranty for electrical parts.
ACCESSORIES AND SPARE PARTS
See Accessories section for the entire list.

POLYWARM® COATED DHW STORAGE

BIM FILE AVAILABLE

cordivari.com/erp

On line ErP label tool

BOLLY® 1 PDC WB

Model	HARD FOAM insulation	Heat pump max output	ENERGY EFFICIENCY CLASS
	Art. Nr.	[kW]	
300	3105162320203	15	**B**
500	3105162320205	22	**C**
800	3105162320206	26	**B**



-30% reduction of the D.W.W. production time and major comfort

70lt of DHW (45 °C) in only 15 min, with the possibility of heating only the necessary water volume

More time for the heat pump to be dedicated to heating or cooling

Energy focused where needed: all the energy produced with the heat pump concentrated in the upper part of the tank.



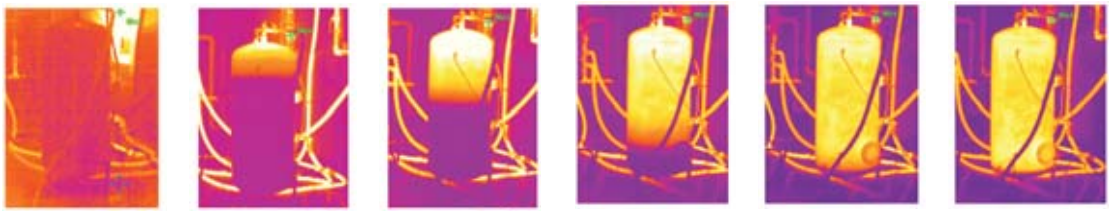

Series of thermographs that illustrate the efficiency of the Cordivari patent through the perfect thermal stratification

ACCESSORIES

Thermometer

Art. Nr.
5032240000107
5 units box



Titanium electronic anode

Art. Nr.	Model
5200000000008	300
5200000000009	500
5200000000011	800



Electric immersion heaters

Art. Nr.	Output [kW]
5221000000064	2



Antilegionellosis kit

Art. Nr.	
5221000000065	Electrical immersion heater + EASY CONTROL electronic display



P.E.D. product designed and produced in conformity to the article 4.3 of directive 2014/68/UE - ErP Ecodesgin directive 2009/125/CE

BOLLY® **1 PDC**

BOLLITORE POLYWARM® PER POMPE DI CALORE PER PRODUZIONE DI A.C.S.

STORAGE		EXCHANGE MODULE	
Pmax	Tmax	Pmax	Tmax
10 bar	90 °C	10 bar	110 °C

CORDIVARI Lab

TÜV Rheinland Energie und Umwelt GmbH states that test procedures and Cordivari LAB are certified conforming to European standard EN 15332, as indicated by Ecodesign ErP Directive.

TESTED ErP

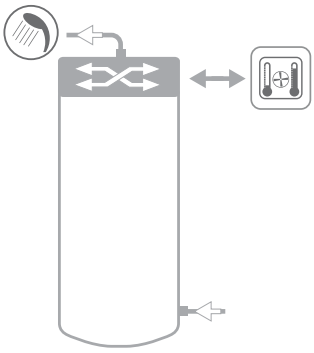

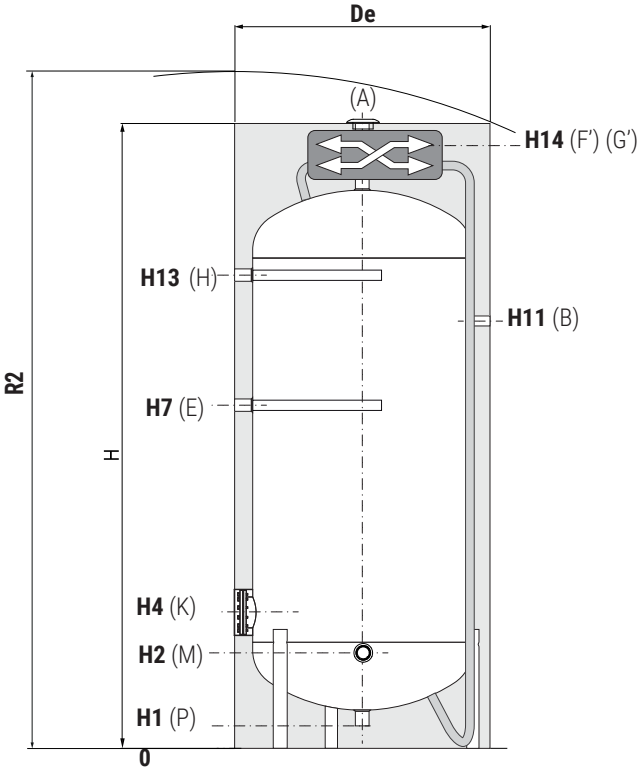

See TECHNICAL SUPPORT chapter for example of installation

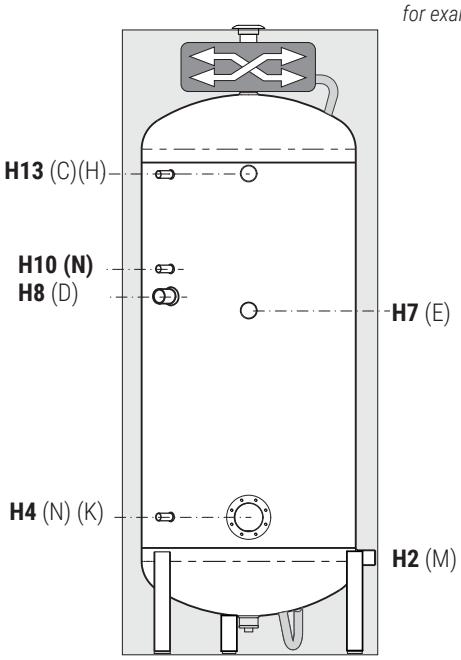

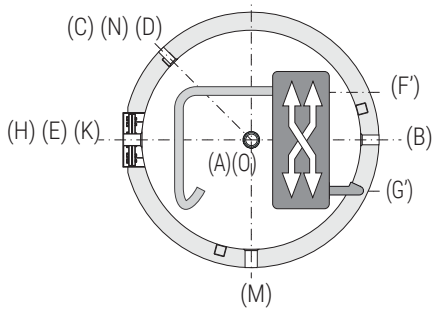

A	Domestic hot water outlet 1"1/4 F
B	Recirculation 1" F
C	Connection for thermometer 1/2" F
D	Connection for electric immersion heater
E	Connection for magnesium anode 1"1/4 F
F-F'	Primary circuit inlet
G-G'	Primary circuit outlet
H	Connection for 2nd magnesium anode 1"1/4 F (≥ 800 lt.)
K	Blind flange for inspection
M	Domestic cold water circuit inlet 1" F
N	Connection for instrumentation 1/2" F
O	Drain

Model	Volume	De	H	R1	H1	H2	H4	H7	H8	H10	H11
	[lt]	[mm]									
300	291	650	1680	1810	71	246	381	871	931	1076	1101
500	497	750	1970	2120	71	266	406	1071	1139	1291	1326
800	789	900	2360	2540	101	343	483	1243	1308	1573	1598

Model	Volume	H13	H14	P	K	D	F-G	F'-G'
	[lt]	[mm]				Connections F		
300	291	1221	1525	1"1/4	Øi74Øe140	1"1/2	1"1/4	1"
500	497	1471	1812	1"1/4	Øi74Øe140	1"1/2	1"1/4	1"
800	789	1788	2196	3/4"	Øi74Øe140	2"	1"1/4	1"

P.E.D. product designed and produced in conformity to the article 4.3 of directive 2014/68/UE - ErP Ecodesgin directive 2009/125/CE

CORDIVARI

BOLLY® **2 PDC**

POLYWARM® COATED DHW PRODUCTION TANK FOR HEAT PUMP WITH 1 FIXED HEAT EXCHANGER



APPLICATION
Production and storage of domestic hot water (DHW).
MATERIAL
Mild steel Polywarm® coated (Attestation ACS - SSICA - DVGW - W270 - WRAS)
EXCHANGE MODULE
Counter-flow heat exchanger system with heat load from the top.
CIRCULATION PUMP
A pump is embedded on the top of the tank to allow the circulation of sanitary water through the plate heat exchanger, only when the heat pump is running. Circulator speed: 1450/2450 (min/max) n rpm; Power consumption: 45/85 (min/max) W; Current drawn 0,21/0,38 (min/max); Power supply 230V/1Ph/50Hz.
HEAT EXCHANGER
N° 1 mild steel Polywarm® coated heat exchanger.
INSULATION
High thermal insulation with ecological polyurethane hard foam.
Grey PVC external lining.

CATHODE PROTECTION
Magnesium anode.
DRAIN
External confluence through drain connection.
GASKET- FLANGE PLATE
Silicone gaskets suitable for water intended for human consumption (tested according to 98/83/CE), max temperature up to 200°C. Inspection flange
WARRANTY
5 years (tank)
See general sales conditions and warranty for electrical parts.
ACCESSORIES AND SPARE PARTS
See Accessories section for the entire list.

POLYWARM® COATED DHW STORAGE

BIM FILE AVAILABLE

STOCK AVAILABILITY

cordivari.com/erp

On line ErP label tool

BOLLY® 2 PDC WB

Model	HARD FOAM insulation Art. Nr.	Heat pump max output [kW]	HEAT EXCHANGER SURFACE [m²]	ENERGY EFFICIENCY CLASS
300	3135162320403	15	1,2	**B**
500	3135162320405	22	1,8	**C**
800	3135162320406	26	2,7	**B**



-30% reduction of the D.W.W. production time and major comfort

70lt of DHW (45 °C) in only 15 min, with the possibility of heating only the necessary water volume

More time for the heat pump to be dedicated to heating or cooling

Energy focused where needed: all the energy produced with the heat pump concentrated in the upper part of the tank.



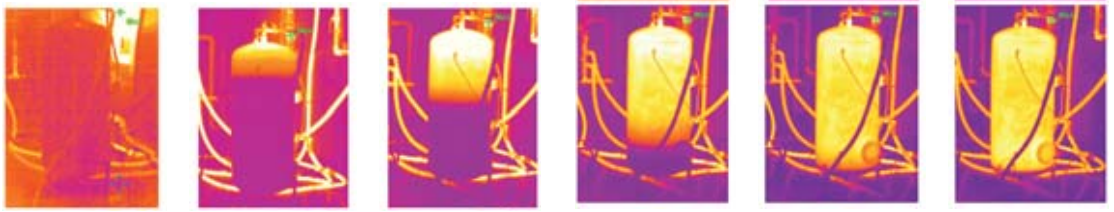

Series of thermographs that illustrate the efficiency of the Cordivari patent through the perfect thermal stratification

ACCESSORIES

Thermometer

Art. Nr.
5032240000107
5 units box



Electric immersion heaters

Art. Nr.	Output [kW]
5221000000064	2



Titanium electronic anode

Art. Nr.	Model
5200000000008	300
5200000000009	500
5200000000011	800



Antilegionellosis kit

Art. Nr.	
5221000000065	Electrical immersion heater + EASY CONTROL electronic display



P.E.D. product designed and produced in conformity to the article 4.3 of directive 2014/68/UE - ErP Ecodesgin directive 2009/125/CE

BOLLY® **2 PDC**

POLYWARM® COATED DHW PRODUCTION TANK FOR HEAT PUMP WITH 1 FIXED HEAT EXCHANGER

STORAGE		EXCHANGE MODULE		FIXED HEAT EXCHANGER	
Pmax	Tmax	Pmax	Tmax	Pmax	Tmax
10 bar	90 °C	10 bar	110 °C	12 bar	110 °C

CORDIVARI Lab

TÜV Rheinland Energie und Umwelt GmbH states that test procedures and Cordivari LAB are certified conforming to European standard EN 15332, as indicated by Ecodesign ErP Directive.

TESTED ErP

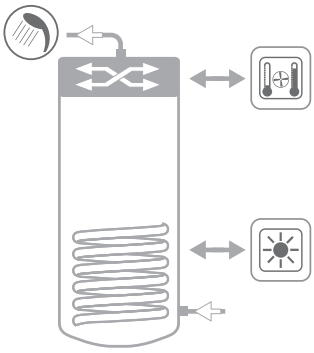

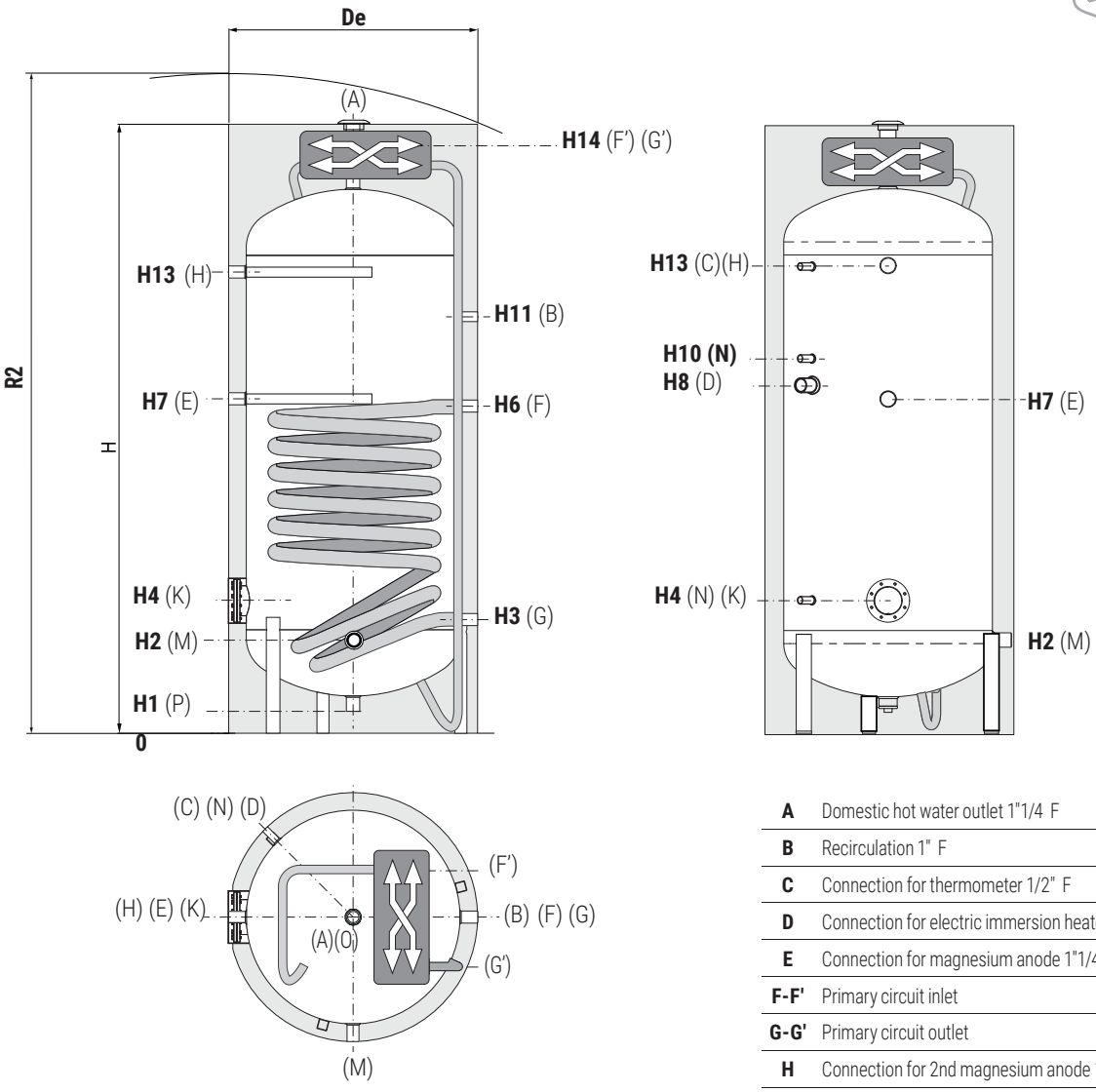

A	Domestic hot water outlet 1"1/4 F
B	Recirculation 1" F
C	Connection for thermometer 1/2" F
D	Connection for electric immersion heater
E	Connection for magnesium anode 1"1/4 F
F-F'	Primary circuit inlet
G-G'	Primary circuit outlet
H	Connection for 2nd magnesium anode 1"1/4 F (≥ 800 lt.)
K	Blind flange for inspection
M	Domestic cold water circuit inlet 1" F
N	Connection for instrumentation 1/2" F
O	Drain

Model	Volume	De	H	R1	H1	H2	H4	H7	H8	H10	H11
	[lt]	[mm]									
300	291	650	1680	1810	71	246	381	871	931	1076	1101
500	497	750	1970	2120	71	266	406	1071	1139	1291	1326
800	789	900	2360	2540	101	343	483	1243	1308	1573	1598

Model	Volume	H13	H14	P	K	D	F-G	F'-G'
	[lt]	[mm]				Connections F		
300	291	1221	1525	1"1/4	Øi74Øe140	1"1/2	1"1/4	1"
500	497	1471	1812	1"1/4	Øi74Øe140	1"1/2	1"1/4	1"
800	789	1788	2196	3/4"	Øi74Øe140	2"	1"1/4	1"

P.E.D. product designed and produced in conformity to the article 4.3 of directive 2014/68/UE - ErP Ecodesgin directive 2009/125/CE

CORDIVARI

BOLLY® **3 PDC**

POLYWARM® COATED DHW PRODUCTION TANK FOR HEAT PUMP WITH 2 FIXED HEAT EXCHANGERS



APPLICATION
Production and storage of domestic hot water (DHW).
MATERIAL
Mild steel Polywarm® coated (Attestation ACS - SSICA - DVGW - W270 - WRAS)
EXCHANGE MODULE
Counter-flow heat exchanger system with heat load from the top.
CIRCULATION PUMP
A pump is embedded on the top of the tank to allow the circulation of sanitary water through the plate heat exchanger, only when the heat pump is running. Circulator speed: 1450/2450 (min/max) n rpm; Power consumption: 45/85 (min/max) W; Current drawn 0,21/0,38 (min/max); Power supply 230V/1Ph/50Hz.
HEAT EXCHANGER
N° 1 mild steel Polywarm® coated heat exchanger.
INSULATION
High thermal insulation with ecological polyurethane hard foam.
Grey PVC external lining.

CATHODE PROTECTION
Magnesium anode.
DRAIN
External confluence through drain connection.
GASKET- FLANGE PLATE
Silicone gaskets suitable for water intended for human consumption (tested according to 98/83/CE), max temperature up to 200°C. Inspection flange
WARRANTY
5 years (tank)
See general sales conditions and warranty for electrical parts.
ACCESSORIES AND SPARE PARTS
See Accessories section for the entire list.

POLYWARM® COATED DHW STORAGE

BIM FILE AVAILABLE

cordivari.com/erp

On line ErP label tool

BOLLY® 3 PDC WB

Model	**HARD FOAM** insulation	Heat pump max output	HEAT EXCHANGER SURFACE Upper	Lower	ENERGY EFFICIENCY CLASS ErP
	Art. Nr.	[kW]	[m²]		
300	3135162320452	15	0,7	1,2	**B**
500	3135162320453	22	1,2	1,8	**C**



-30% reduction of the D.W.W. production time and major comfort

70lt of DHW (45 °C) in only 15 min, with the possibility of heating only the necessary water volume

More time for the heat pump to be dedicated to heating or cooling

Energy focused where needed: all the energy produced with the heat pump concentrated in the upper part of the tank.



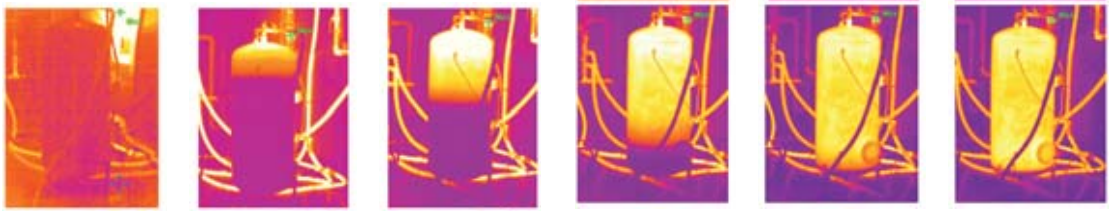

Series of thermographs that illustrate the efficiency of the Cordivari patent through the perfect thermal stratification

ACCESSORIES

Thermometer

Art. Nr.
5032240000107
5 units box



Electric immersion heaters

Art. Nr.	Output [kW]
5221000000064	2



Titanium electronic anode

Art. Nr.	Model
5200000000008	300
5200000000009	500



Antilegionellosis kit

Art. Nr.	
5221000000065	Electrical immersion heater + EASY CONTROL electronic display



P.E.D. product designed and produced in conformity to the article 4.3 of directive 2014/68/UE - ErP Ecodesgin directive 2009/125/CE

BOLLY® **3 PDC**

POLYWARM® COATED DHW PRODUCTION TANK FOR HEAT PUMP WITH 2 FIXED HEAT EXCHANGERS

STORAGE		EXCHANGE MODULE		FIXED HEAT EXCHANGER	
Pmax	Tmax	Pmax	Tmax	Pmax	Tmax
10 bar	90 °C	10 bar	110 °C	12 bar	110 °C

CORDIVARI Lab

TÜV Rheinland Energie und Umwelt GmbH states that test procedures and Cordivari LAB are certified conforming to European standard EN 15332, as indicated by Ecodesign ErP Directive.

TESTED ErP

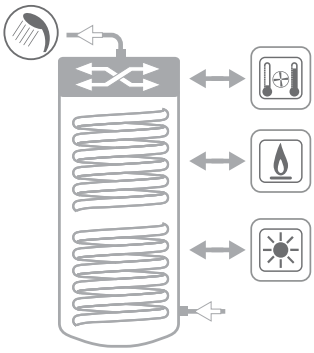

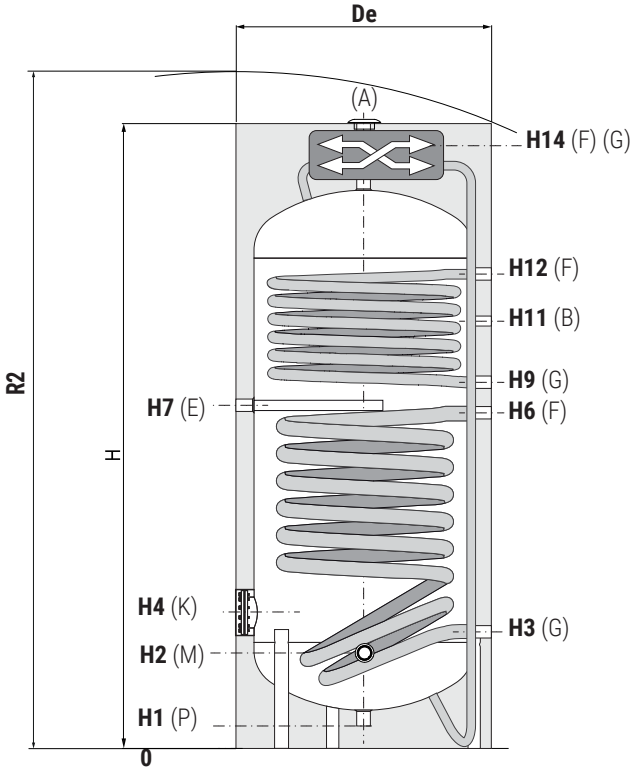

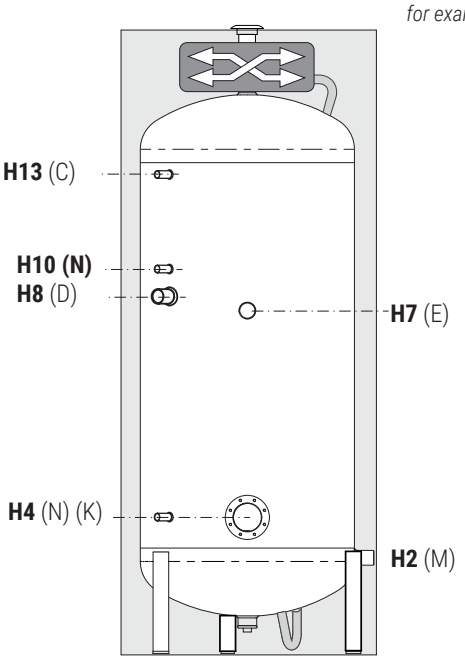

See TECHNICAL SUPPORT chapter for example of installation

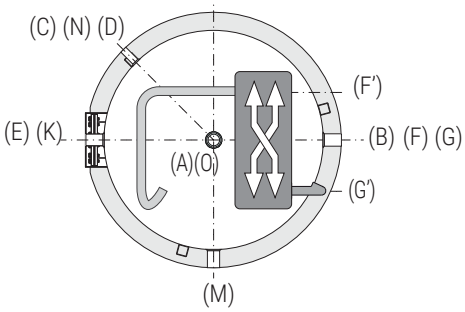

A	Domestic hot water outlet 1"1/4 F
B	Recirculation 1" F
C	Connection for thermometer 1/2" F
D	Connection for electric immersion heater
E	Connection for magnesium anode 1"1/4 F
F-F'	Primary circuit inlet
G-G'	Primary circuit outlet
K	Blind flange for inspection
M	Domestic cold water circuit inlet 1" F
N	Connection for instrumentation 1/2" F
O	Drain

Model	Volume	De	H	R1	H1	H2	H3	H4	H6	H7	H8	H9
	[lt]	[mm]										
300	291	650	1680	1800	71	246	311	381	832	871	931	981
500	497	750	1970	2110	71	266	341	406	1031	1071	1139	1181

Model	Volume	H10	H11	H12	H13	H14	P	K	D	F-G	F'-G'
	[lt]	[mm]					Connections F				
300	291	1076	1101	1221	1221	1522	1"1/4	Øi74Øe140	1"1/2	1"1/4	1"
500	497	1291	1326	1471	1471	1812	1"1/4	Øi74Øe140	1"1/2	1"1/4	1"

P.E.D. product designed and produced in conformity to the article 4.3 of directive 2014/68/UE - ErP Ecodesgin directive 2009/125/CE

BOLLY® **PDC**
TECHNICAL DATA AND EXAMPLE OF INSTALLATION



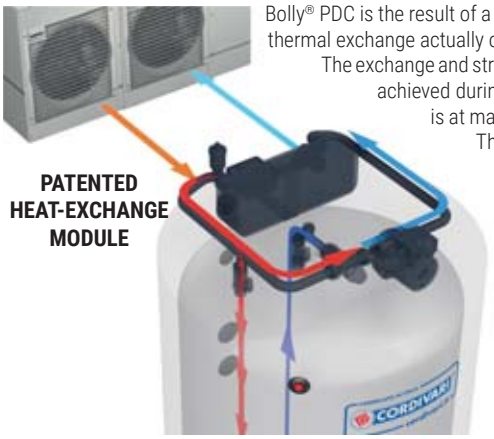

Bolly® PDC is the result of a continuous research aimed to develop a unique calorifier in its field. It is in fact the only patented system of thermal exchange actually on the market, specifically conceived for installation and heat pumps of latest generation.

The exchange and stratification system is conceived to self-balance: only part of the heated water, proportionate to the temperature achieved during the thermal exchange, is inserted in the tank from the top. This way the water inserted in the upper part is at maximum desired temperature while fresh water coming from the lower part of the tank goes to the exchanger. This leads to many advantages such as the increased efficiency of the heat pump C.o.p, the achievement of a perfect thermal stratification, that allows to profit immediately of the heated water. This also allows to heat only part of the tank reducing energy waste.

The innovative Bolly® PDC, combined with a heat pump and thanks to the new patented exchange group is able to guarantee 30 % higher performances compared to a generic, traditional calorifier in terms of ignition time and thermal exchange efficiency.

Laboratory tests and researches conducted on the stratification process confirm that the use of Bolly® PDC in a heat pump installation means an increased comfort and about a 15% reduction of electric consumption while extending the generator lifecycle reducing its turning on/off.

Bolly PDC (model 500) tank heating, connected to 12kW heat pump

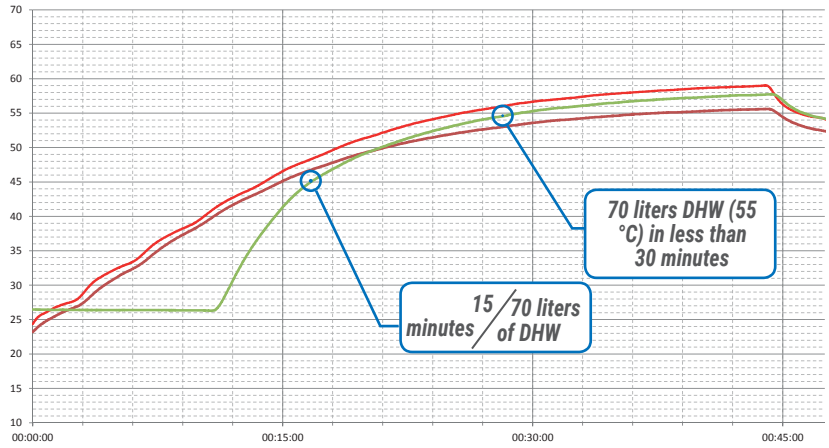

- -30% ignition time and consequent better efficiency of HP in heating/cooling phase.
- 70 L. of DHW at 55 °C in just 30 minutes, with possibility to heat only the necessary required water volume.
- Optimizing the time necessary for the HP for heating and cooling the room.
- Energy produced by the HP will be concentrated in the upper part of the storage volume.

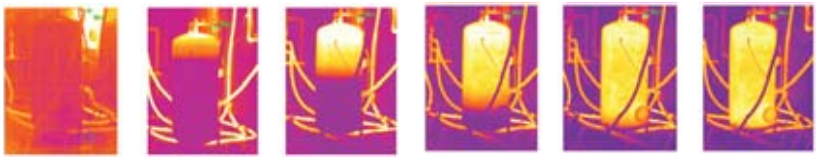

BOLLY® PDC
Upper loading and improved thermal stratification thanks to the patented heat exchanger group.

Standard tank (model 500) heating, connected to 12kW heat pump

T1 HEAT PUMP T2 HEAT PUMP DHW Temperature

- Significantly longer ignition time.
- Lower DeltaT between primary circuit and storage temperature, with relevant efficiency decrease.
- General lower comfort on installation.
- Necessity to heat the complete volume of storage tank

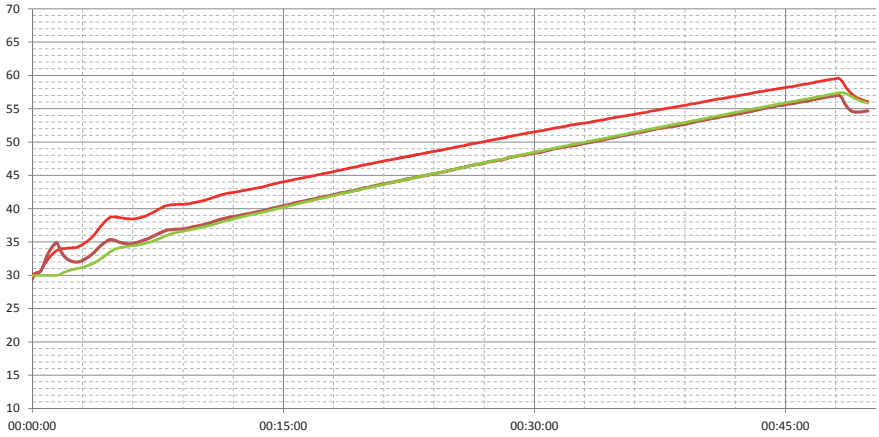

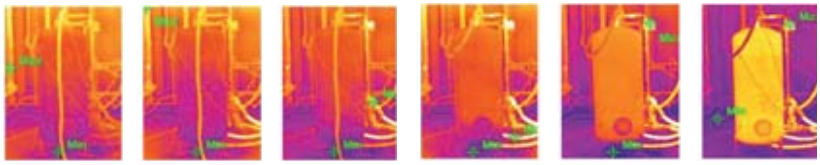

Standard Calorifiers with no thermal stratification device needs always to be heated completely

BOLLY® **PDC**
TECHNICAL DATA AND EXAMPLE OF INSTALLATION



The peculiarity of the Bolly® PDC heat exchange module consists in the possibility of loading the thermal power in the DHW STORAGE from above, in order to prepare hot water for the user at the right temperature after few minutes of operation. Obviously, the quantity of DHW available will depend on the actual time of operation, the initial temperature of the sanitary cold water, and the thermal output of the generator.
The typical operating condition of an hydronic heat pump generator is to provides 55 ° C at the primary inlet with 5 ° C deltaT on the return side. The presence of a thermostatic mixer on the domestic circuit allows the appliance to adjust the performance and the efficiency in the heating phase. With the mixer at minimum (in practice with the mixer excluded) the maximum performance is obtained in terms of exchangeable output at the beginning of the heating process (values shown in the catalog). But under these conditions, as the temperature rises on the secondary side the exchanged output will go down.
Much more interesting is to examine the behavior of the exchange module with the mixer in position "2" which corresponds to primary at 55 ° C and production of DHW at 50 ° C, with the peculiarity that this value of 50 ° C is independent from the temperature of the cold water.
Under these conditions the exchanged output remains constant for all the time necessary to heat the STORAGE volume and, independently of the initial storage temperature. Summing up:

- ***Primary Inlet= 55 °C***
- ***Mixer position = 2***
- ***DHW inlet temperature into the storage from exchange module = 50 °C***
- ***Bolly® PDC 300 Exchangeable output = 15 kW***
- ***Bolly® PDC 500 Exchangeable output = 22 kW***
- ***Bolly® PDC 800 Exchangeable output = 26 kW***
- ***DeltaT at primary = 5 °C (return to Generator 50 °C)***

Under these conditions the producibility of DHW (and therefore the storage heating time) will depend on the initial storage temperature which corresponds to the network water temperature.

Model Bolly PDC	Primary circuit inlet temperature T1 [°C]	Mixer position	Output [kW]	Initial storage temperature 10°C		Initial storage temperature 20°C		Initial storage temperature 25°C	
				DHW production at 50°C [lt/min]	Storage heating time [min]	DHW production at 50°C [lt/min]	Storage heating time [min]	DHW production at 50°C [lt/min]	Storage heating time [min]
300	55	2	15	5,1	57	6,8	43	8,2	36
500			22	6,8	73	9,1	55	10,9	46
800			26	8,8	89	11,8	67	14,2	56

EXAMPLE OF INSTALLATION WITH **BOLLY® 1 PDC**

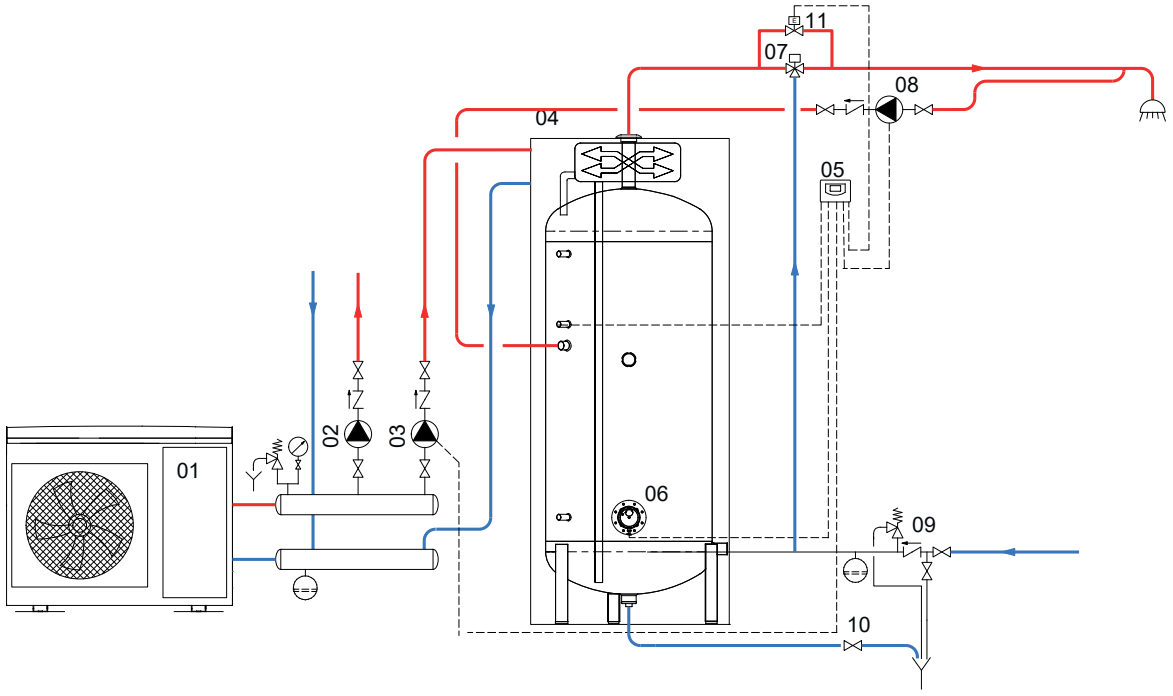

01	Generator (Heat pump)	04	Bolly PDC	07	Thermostatic mixing valve	10	Blowdown valve
02	Heating system circulation group	05	Easy Control electronic display/ thermostat	08	D.H.W. recirculation group	11	By-pass solenoid valve
03	D.H.W. circulation group	06	Electric immersion heater (optional)	09	Hydraulic safety group		

BOLLY® **1 XL**

POLYWARM® COATED DOMESTIC HOT WATER CALORIFIER WITH 1 FIXED HEAT EXCHANGER



APPLICATION
Production and storage of domestic hot water (DHW).
MATERIAL
Mild steel Polywarm® coated (Attestation ACS - SSICA - DVGW - W270 - WRAS)
HEAT EXCHANGER
Mild steel Polywarm® coated heat exchangers.
INSULATION
High thermal insulation with ecological polyurethane hard foam.
Grey PVC external lining.
CATHODE PROTECTION
Magnesium anode.
DRAIN
External confluence through drain connection.
GASKET- FLANGE PLATE
Silicone gaskets suitable for water intended for human consumption (tested according to 98/83/CE), max temperature up to 200°C. Mild steel inspection flange plate with Polywarm® treatment and connection for electric immersion heater.
WARRANTY
5 years - See general sales conditions and warranty
ACCESSORIES AND SPARE PARTS
See Accessories section for the entire list.

POLYWARM® COATED DHW STORAGE

POLYWARM® COATED HEAT EXCHANGER

STOCK AVAILABILITY



cordivari.com/erp



On line ErP label tool



BOLLY® 1 XL WB

Model	HARD FOAM insulation Art. Nr.	HEAT EXCHANGER SURFACE [m²]	ENERGY EFFICIENCY CLASS ErP
200	3105162320702	2	**B**
300	3105162320703	3,4	**B**
400	3105162320706	4,4	**C**
500	3105162320705	5,4	**C**
800	3105162320710	6,0	**B**
1000	3105162320711	6,5	**B**



BOLLY® 1 XL WC

Model	DISMOUNTABLE SOFT FLEECE insulation Art. Nr.	HEAT EXCHANGER SURFACE [m²]	ENERGY EFFICIENCY CLASS ErP
800	3103162321158	6,0	**C**
1000	3103162321159	6,5	**C**

ACCESSORIES

ELECTRIC IMMERSION HEATERS

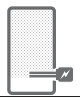

Mod.	Heated volume by electric immersion heater [lt]	MONOPHASE **1,5** kW	**2** kW	**3** kW
		5240000000051	5240000000052	5240000000053
		Ignition time from 10 °C to 45 °C with electric immersion heaters [min]		
200	166	298	223	149
300	245	439	329	219
400	354	634	476	317
500	424	759	569	380
800	607	989	742	495
1000	783	1275	956	638

"Easy Control" Electronic Display-mounted on tank

ART. NR.	FOR MODELS
5005000310002	WC
5005000310003	WB



Thermometer

Art. Nr.
5032240000107
5 units box



Titanium electronic anode

See Accessories section
(available up to model 500)

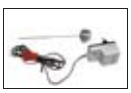

P.E.D. product designed and produced in conformity to the article 4.3 of directive 2014/68/UE - ErP Ecodesgin directive 2009/125/CE

BOLLY® **1 XL**

POLYWARM® COATED DOMESTIC HOT WATER CALORIFIER WITH 1 FIXED HEAT EXCHANGER

STORAGE		HEAT EXCHANGER	
Pmax	Tmax	Pmax	Tmax
10 bar	90 °C	12 bar	110 °C

CORDIVARI Lab

TÜV Rheinland Energie und Umwelt GmbH states that test procedures and Cordivari LAB are certified conforming to European standard EN 15332, as indicated by Ecodesign ErP Directive.

TESTED ErP

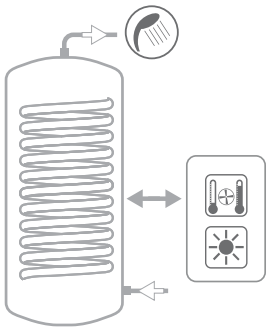

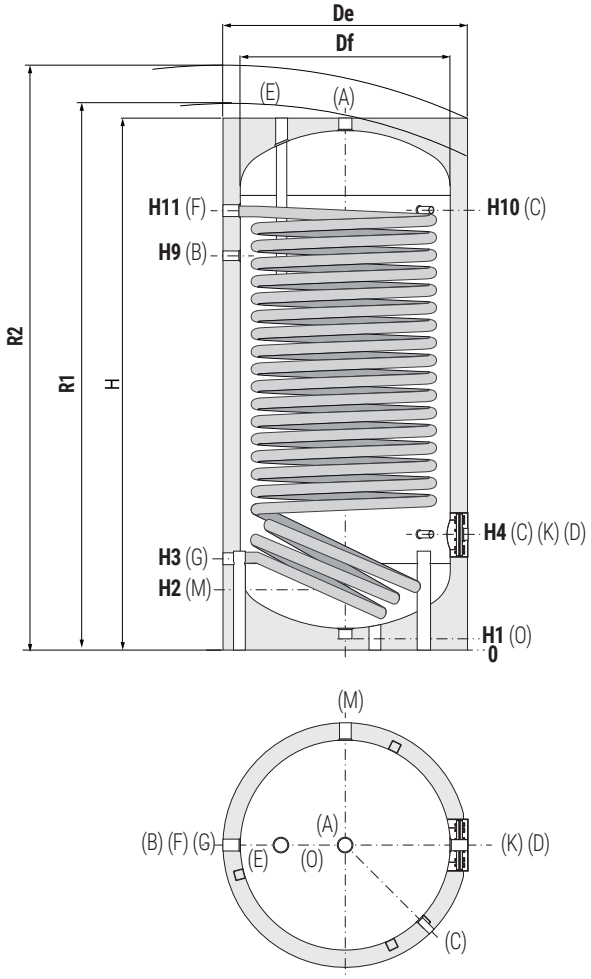

A	Domestic hot water outlet
B	Recirculation
C	Connection for instrumentation 1/2" F
D	Connection for electric immersion heater
E	Connection for magnesium anode 1"1/4 F
F	Primary circuit inlet 1"1/4 F
G	Primary circuit outlet 1"1/4 F
K	Blind flange for inspection
M	Domestic cold water circuit inlet
N	Connection for instrumentation 1/2" F
O	Drain 1"1/4 F, for models > 800 Lt 3/4" F

BOLLY® 1 XL WB - HARD FOAM INSULATION

Model	Volume	De	H	R2	H1	H2	H3	H4	H9	H10	H11	K	M	B	A	D
	[lt]	[mm]											Connections F			
200	189	550	1440	1560	71	220	285	325	1055	1190	1190	Øi120/Øe180	3/4"	3/4"	1"1/4	1"1/2
300	291	650	1500	1650	71	246	321	381	1091	1211	1211	Øi120/Øe180	1"	1"	1"1/4	1"1/2
400	422	700	1766	1910	71	261	321	396	1316	1471	1471	Øi120/Øe180	1"	1"	1"1/4	1"1/5
500	498	750	1800	1960	71	271	346	411	1326	1486	1486	Øi120/Øe180	1"	1"	1"1/4	1"1/2
800	789	900	2180	2370	107	344	424	489	1604	1794	1814	Øi170/Øe240	1"	1"	1"1/4	2"
1000	1038	1000	2230	2460	95	365	445	505	1590	1825	1536	Øi170/Øe240	1"1/4	1"	1"1/2	2"

BOLLY® 1 XL WC - DISMOUNTABLE SOFT FLEECE INSULATION

Model	Volume	Df	De	H	R1	R2	H1	H2	H3	H4	H9	H10	H11	K	M	B	A	D
	[lt]	[mm]													Connections F			
800	789	750	970	2180	2210	2400	107	344	424	489	1604	1794	1814	Øi170/Øe240	1"	1"	1"1/4	2"
1000	1038	850	1070	2230	2265	2480	95	365	445	505	1590	1825	1536	Øi170/Øe240	1"1/4	1"	1"1/2	2"

P.E.D. product designed and produced in conformity to the article 4.3 of directive 2014/68/UE - ErP Ecodesgin directive 2009/125/CE

BOLLY® **1 XL**

HEAT EXCHANGERS TECHNICAL DATA



Data have been calculated on following basis:
1) Primary circuit at T1 and proper energy source;
2) Production of DHW in continuous way from 10 °C at t2;
3) DHW that can be taken in the first 10' and in the first hour from storage at 60°C, input 10°C and output 45°C;
4) Sanitary water according to UNI CTI 8065.

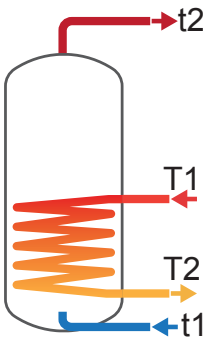

Model	Primary Flow rate	Ignition time (minutes) from 10 °C to t2 and primary at T1				Maximum power exchange (kW) with primary at T1, secondary within 10-45 °C and constant use of DHW production				DHW continuous production lt/h within 10-45 °C and primary at T1			
	[m³/h]	T1/t2				T1				T1			
		55/50	65/60	70/60	80/60	55	65	70	80	55	65	70	80
200	2,5	40	42	30	20	21	31	36	47	522	773	899	1153
	1,25	49	52	36	24	19	28	32	40	468	677	780	990
300	3	44	46	32	22	30	45	52	66	751	1104	1281	1640
	1,5	55	57	41	27	27	39	44	56	664	951	1093	1377
400	3,5	47	49	35	23	42	61	71	90	1033	1510	1747	2229
	1,75	59	62	44	30	37	53	60	75	915	1298	1486	1863
500	3,5	49	51	36	24	48	70	81	103	1198	1740	2009	2551
	1,75	62	65	47	31	43	60	68	85	1060	1487	1696	2114
800	5	59	61	43	29	64	93	107	136	1571	2291	2650	3372
	2,5	72	76	55	37	57	80	92	115	1412	1993	2277	2845
1000	8	65	68	48	32	72	106	124	158	1780	2632	3058	3925
	4	76	80	57	38	66	95	110	139	1642	2364	2720	3436

Model	Primary Flow rate	DHW produced in the first 10 minutes in lt/10' input 10 °C output 45 °C, storage at t2 and primary at T1				DHW produced in the first hour in lt/60' input 10 °C output 45 °C, storage at t2 and primary at T1				Heat exchanger pressure loss	
	[m³/h]	T1/t2				T1/t2				[mm H_2O]	[mbar]
		55/50	65/60	70/60	80/60	55/50	65/60	70/60	80/60		
200	2,5	221	399	420	462	241	888	989	1193	1062,3	104,2
	1,25	221	383	400	435	238	811	894	1062	309,7	30,4
300	3	340	600	629	689	368	1299	1441	1728	830,2	81,4
	1,5	339	574	598	645	363	1176	1290	1517	243,2	23,8
400	3,5	492	855	894	974	531	1811	2001	2386	1263,9	123,9
	1,75	491	819	850	913	524	1641	1791	2093	370,8	36,4
500	3,5	581	1001	1046	1137	625	2103	2319	2752	1263,9	123,9
	1,75	579	959	994	1064	617	1901	2068	2403	370,8	36,4
800	5	918	1510	1570	1691	977	2962	3249	3826	2976,1	291,9
	2,5	916	1461	1508	1603	967	2723	2950	3405	874,7	85,8
1000	8	1203	1920	1991	2136	1270	3587	3928	4621	7358,7	721,6
	4	1201	1875	1935	2054	1261	3372	3657	4230	2161,9	212,0

HEAT EXCHANGERS PRESSURE LOSS

Heat exchangers surface [m²]	
200	2
300	3,4
400	4,4
500	5,4
800	6
1000	6,5

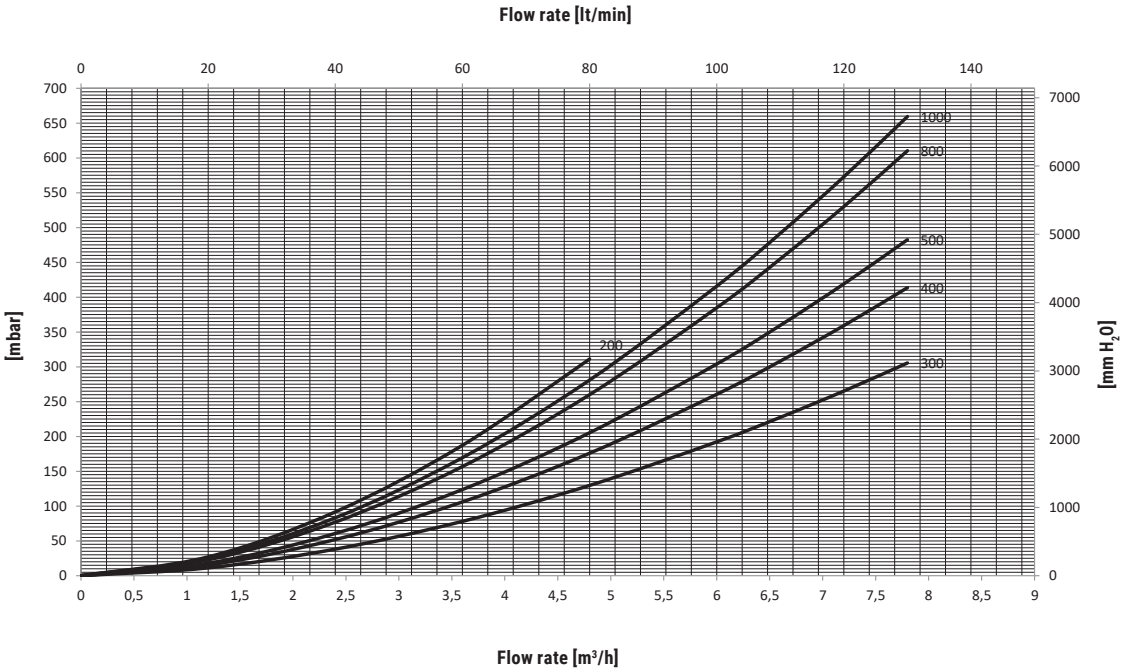

BOLLY® **1 XL**

HEAT EXCHANGERS TECHNICAL DATA



Heat Exchanger output referred to temperature and flow rate of primary circuit and with secondary at 10/45°C at maximum withdrawal of producible DHW (Upper limit of the curves referred to maximum primary flow rate in the heat exchanger, while the lower limit in the curves refer to the minimum primary flow rate)

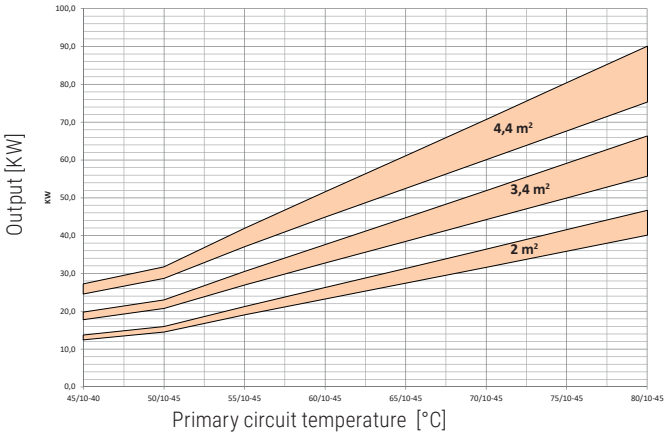

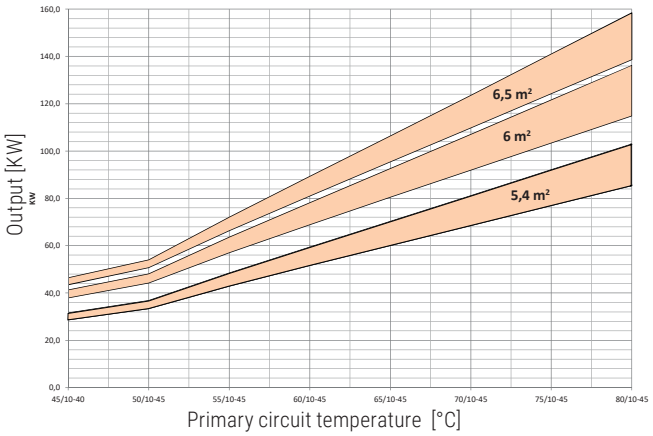

Heat exchanger surface	2 m²		3,4 m²		4,4 m²	
Flow rate [m³/h]	MAX	MIN	MAX	MIN	MAX	MIN
	2,5	1,25	3	1,5	3,5	1,75

Heat exchanger surface	5,4 m²		6 m²		6,5 m²	
Flow rate [m³/h]	MAX	MIN	MAX	MIN	MAX	MIN
	3,5	1,75	5	2,5	8	4

EXAMPLE OF INSTALLATION WITH **BOLLY® 1 XL**

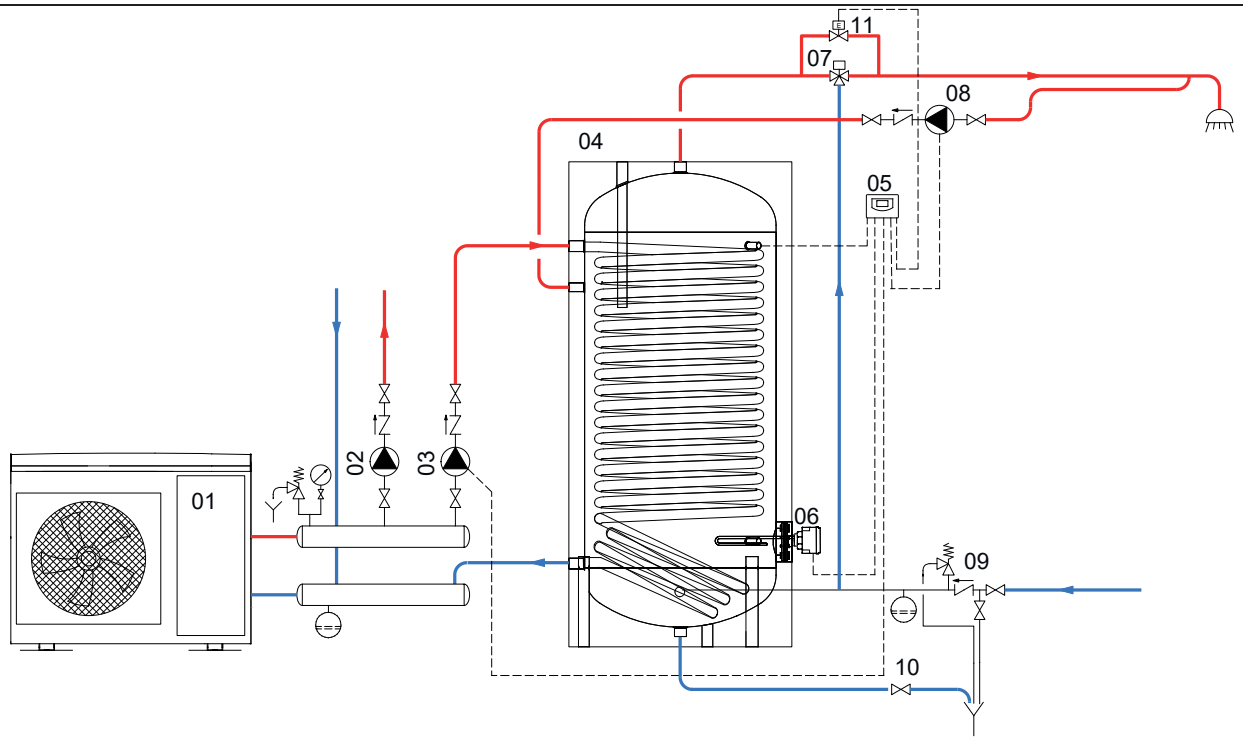

01	Generator (Heat pump)	05	Easy Control electronic display/ thermostat	09	Hydraulic safety group
02	Heating system circulation group	06	Electric immersion heater (optional)	10	Blowdown valve
03	D.H.W. circulation group	07	Thermostatic mixing valve	11	By-pass solenoid valve
04	Bolly® XL	08	D.H.W. recirculation group		

BOLLY® **2 XL**

POLYWARM® COATED DOMESTIC HOT WATER CALORIFIER WITH 2 FIXED HEAT EXCHANGERS



APPLICATION
Production and storage of domestic hot water (DHW).
MATERIAL
Mild steel Polywarm® coated (Attestation ACS - SSICA - DVGW - W270 - WRAS)
HEAT EXCHANGER
N° 2 mild steel Polywarm® coated heat exchangers.
INSULATION
High thermal insulation with ecological polyurethane hard foam.
Grey PVC external lining.
CATHODE PROTECTION
Magnesium anode.
DRAIN
External confluence through drain connection.
GASKET- FLANGE PLATE
Silicone gaskets suitable for water intended for human consumption (tested according to 98/83/CE), max temperature up to 200°C. Mild steel inspection flange plate with Polywarm®.
WARRANTY
5 years - See general sales conditions and warranty
ACCESSORIES AND SPARE PARTS
See Accessories section for the entire list.

POLYWARM® COATED DHW STORAGE

POLYWARM® COATED HEAT EXCHANGER



cordivari.com/erp

On line ErP label tool

BOLLY® 2 XL WB

Model	HARD FOAM insulation	HEAT EXCHANGER SURFACE Upper	Lower	ENERGY EFFICIENCY CLASS
	Art. Nr.	[m²]		
200	3135162320510	1,4	0,4	**B**
300	3135162320511	1,9	0,9	**B**
500	3135162320512	3,1	1,4	**C**

ACCESSORIES

ELECTRIC IMMERSION HEATERS

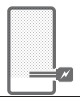

Mod.	Heated volume by electric immersion heater [lt]	MONOPHASE **1,5** kW	**2** kW	**3** kW
		5240000000051	5240000000052	5240000000053
		Ignition time from 10 °C to 45 °C with electric immersion heaters [min]		
200	127	207	155	104
300	173	281	211	140
500	313	509	382	255

"Easy Control" Electronic Display-mounted on tank

ART. NR.	FOR MODELS
5005000310003	WB



Electric immersion heater flange plate

See Accessories section



Titanium electronic anode

Art. Nr.	Model
5200000000008	200, 300
5200000000009	500



P.E.D. product designed and produced in conformity to the article 4.3 of directive 2014/68/UE - ErP Ecodesgin directive 2009/125/CE

BOLLY® **2 XL**

POLYWARM® COATED DOMESTIC HOT WATER CALORIFIER WITH 2 FIXED HEAT EXCHANGERS

STORAGE		HEAT EXCHANGER	
Pmax	Tmax	Pmax	Tmax
10 bar	90 °C	12 bar	110 °C

CORDIVARI Lab

TÜV Rheinland Energie und Umwelt GmbH states that test procedures and Cordivari LAB are certified conforming to European standard EN 15332, as indicated by Ecodesign ErP Directive.

TESTED ErP

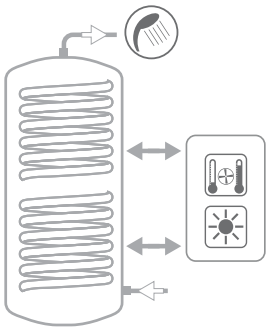

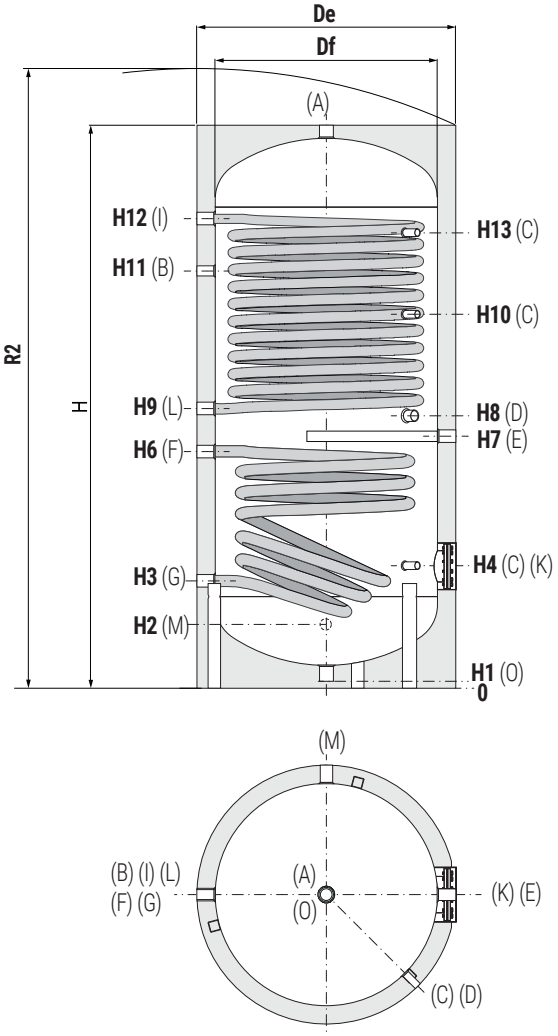

A	Domestic hot water outlet
B	Recirculation
C	Connection for instrumentation 1/2" F
D	Connection for electric immersion heater
E	Connection for magnesium anode 1"1/4 F
F	Lower heat exchanger inlet 1"1/4 F
G	Lower heat exchanger outlet 1"1/4 F
I	Upper heat exchanger inlet 1"1/4 F
J	Connection for 2nd magnesium anode 1"1/4 F (only for models >500)
K	Blind flange for inspection
L	Upper heat exchanger outlet 1"1/4 F
M	Domestic cold water circuit inlet
N	Connection for instrumentation 1/2" F
O	Drain 1" 1/4 F. For models 800 and 1000 connection 3/4" F. For models > 1000 connection 1"" F "

Model	Volume	Weight	DE	H	R2	H1	H2	H3	H4	H6	H7	H8	H9	H10
	[lt]	[Kg]	[mm]											
200	189	65	550	1440	1540	65	220	285	325	475	500	535	570	1105
300	291	83	650	1486	1620	65	246	311	381	596	616	651	686	1076
500	498	134	750	1786	1940	65	271	346	411	671	691	726	761	1296

Model	H11	H12	H13	K	O	M	D	B	A
	[mm]								
200	1089	1200	1195	Øi120/Øe180	1"1/4	3/4"	1"1/2	3/4"	1"1/4
300	1090	1226	1196	Øi120/Øe180	1"1/4	1"	1"1/2	1"	1"1/4
500	1091	1473	1197	Øi120/Øe180	1"1/4	1"	1"1/2	1"	1"1/4

P.E.D. product designed and produced in conformity to the article 4.3 of directive 2014/68/UE - ErP Ecodesgin directive 2009/125/CE

BOLLY® **2 XL**

HEAT EXCHANGERS TECHNICAL DATA



Data have been calculated on following basis:
1) Primary circuit at T1 and proper energy source;
2) Production of DHW in continuous way from 10 °C at t2;
3) DHW that can be taken in the first 10' and in the first hour from storage at 60°C, input 10°C and output 45°C;
4) Sanitary water according to UNI CTI 8065.

UPPER
HEAT EXCHANGER

Model	Primary Flow rate	Ignition time (minutes) from 10 °C to t2 and primary at T1				Maximum power exchange (kW) with primary at T1, secondary within 10-45 °C and constant use of DHW production				DHW continuous production lt/h within 10-45 °C and primary at T1			
	[m³/h]	T1/t2				T1				T1			
		55/50	65/60	70/60	80/60	55	65	70	80	55	65	70	80
200	2,5	37	38	27	18	15	23	27	34	377	564	659	851
	1,25	42	44	31	21	14	21	24	30	346	507	586	749
300	3	43	45	31	20	20	30	35	46	501	747	871	1123
	1,5	50	52	37	24	18	27	31	39	454	661	765	975
500	3,5	46	48	34	22	33	49	56	72	812	1198	1392	1786
	1,75	47	49	35	23	30	42	49	62	732	1050	1208	1525

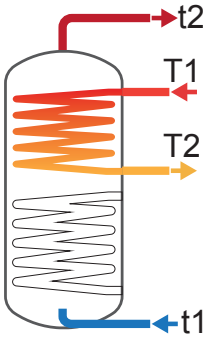

Model	Primary Flow rate	DHW produced in the first 10 minutes in lt/10' input 10 °C output 45 °C, storage at t2 and primary at T1				DHW produced in the first hour in lt/60' input 10 °C output 45 °C, storage at t2 and primary at T1				Heat exchanger pressure loss	
	[m³/h]	T1/t2				T1/t2				[mm H_2O]	[mbar]
		55/50	65/60	70/60	80/60	55/50	65/60	70/60	80/60		
200	2,5	149	275	291	323	163	633	708	862	163,5	16,0
	1,25	149	266	279	306	162	587	651	781	45,6	4,5
300	3	226	400	421	463	245	873	972	1174	88,4	8,7
	1,5	225	386	403	438	242	805	888	1056	24,5	2,4
500	3,5	329	601	633	699	360	1360	1515	1830	70,2	6,9
	1,75	328	576	603	656	355	1242	1368	1621	20,9	2,0

BOLLY® **2 XL**

HEAT EXCHANGERS TECHNICAL DATA



Data have been calculated on following basis:
1) Primary circuit at T1 and proper energy source;
2) Production of DHW in continuous way from 10 °C at t2;
3) DHW that can be taken in the first 10' and in the first hour from storage at 60°C, input 10°C and output 45°C;
4) Sanitary water according to UNI CTI 8065.

LOWER
HEAT EXCHANGER

Model	Primary Flow rate	Ignition time (minutes) from 10 °C to t2 and primary at T1				Maximum power exchange (kW) with primary at T1, secondary within 10-45 °C and constant use of DHW production				DHW continuous production lt/h within 10-45 °C and primary at T1			
	[m³/h]	T1/t2				T1				T1			
		55/50	**65/60**	**70/60**	**80/60**	**55**	**65**	**70**	**80**	**55**	**65**	**70**	**80**
200	2,5	182	189	130	84	4,8	6,9	8,1	10,5	110	168	198	259
	1,25	225	241	151	95	4,4	6,4	7,5	9,7	99	152	179	235
300	3	127	132	92	60	9,9	15,0	17,5	22,8	243	368	431	561
	1,5	150	157	107	69	9,1	13,6	15,8	20,4	220	330	385	499
500	3,5	141	146	102	67	15,5	23,2	27,1	35,1	380	572	669	868
	1,75	139	145	101	66	14,2	21,0	24,4	31,3	346	514	598	771

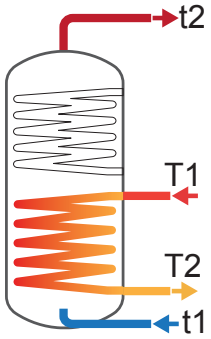

Model	Primary Flow rate	DHW produced in the first 10 minutes in lt/10' input 10 °C output 45 °C, storage at t2 and primary at T1				DHW produced in the first hour in lt/60' input 10 °C output 45 °C, storage at t2 and primary at T1				Heat exchanger pressure loss	
	[m³/h]	T1/t2				T1/t2				[mm H_2O]	[mbar]
		55/50	**65/60**	**70/60**	**80/60**	**55/50**	**65/60**	**70/60**	**80/60**		
200	2,5	217	298	303	313	222	405	428	477	92,7	9,1
	1,25	217	295	300	309	221	392	413	458	24,5	2,4
300	3	335	477	488	509	345	710	761	865	61,5	6,0
	1,5	335	471	480	499	343	679	724	815	16,5	1,6
500	3,5	486	698	714	748	501	1060	1138	1297	100,1	9,8
	1,75	486	688	703	731	499	1014	1082	1219	27,4	2,7

BOLLY® **2 XL**

HEAT EXCHANGERS TECHNICAL DATA



Heat Exchanger output referred to temperature and flow rate of primary circuit and with secondary at 10/45°C at maximum withdrawal of producible DHW (Upper limit of the curves referred to maximum primary flow rate in the heat exchanger, while the lower limit in the curves refer to the minimum primary flow rate)

UPPER HEAT EXCHANGERS

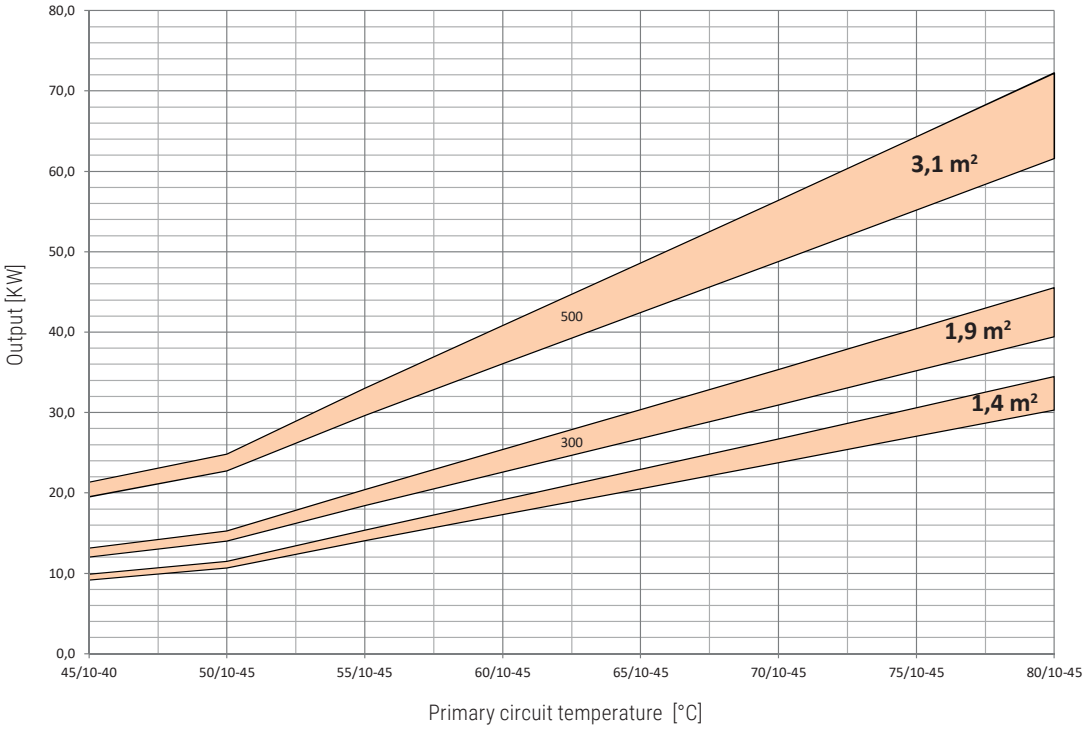

Upper heat exchangers	1,4 m²		1,9 m²		3,1 m²	
Flow rate [m³/h]	MAX	MIN	MAX	MIN	MAX	MIN
	2,5	1,25	3	1,5	3,5	1,75

LOWER HEAT EXCHANGERS

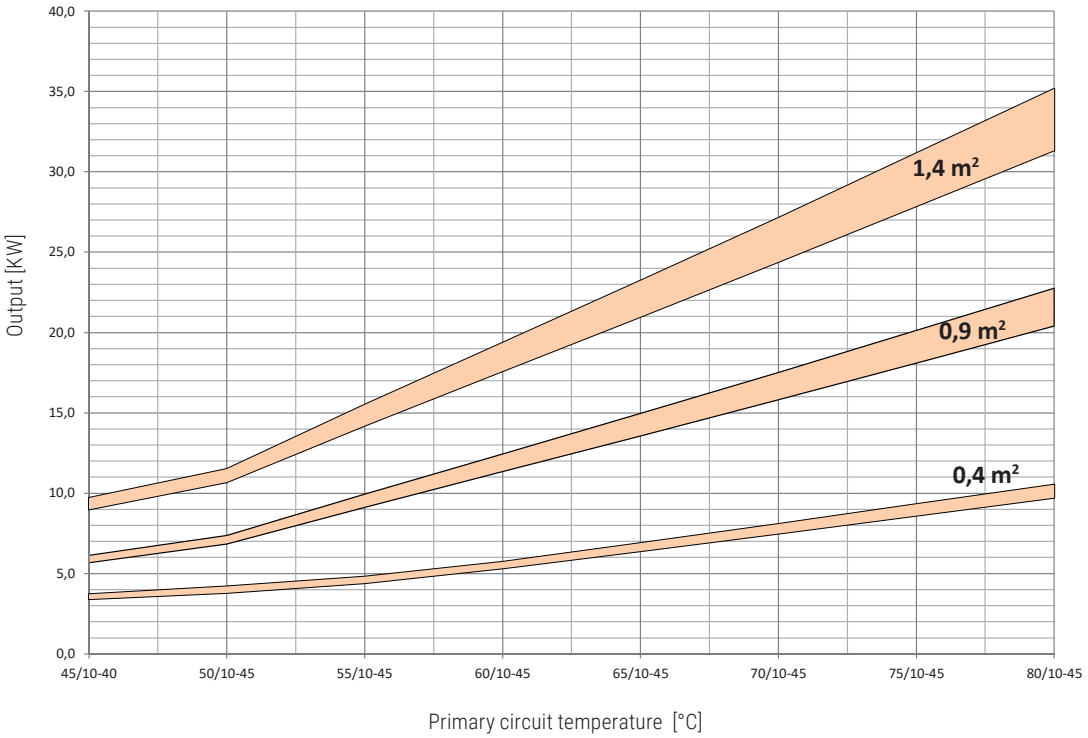

Lower heat exchangers	0,4 m²		0,9 m²		1,4 m²	
Flow rate [m³/h]	MAX	MIN	MAX	MIN	MAX	MIN
	2,5	1,25	3	1,5	3,5	1,75

BOLLY® **2 XL**

HEAT EXCHANGERS PRESSURE LOSS



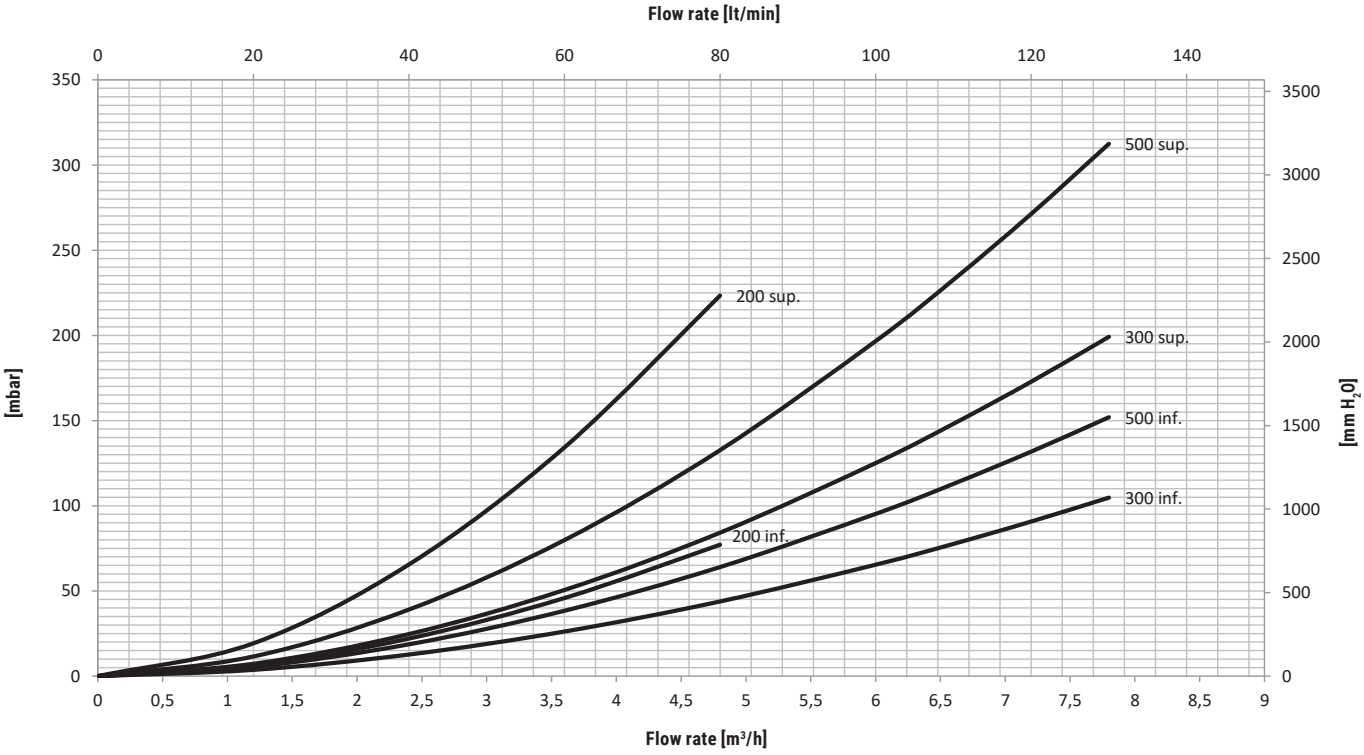

EXAMPLE OF INSTALLATION WITH **BOLLY® 2 XL**

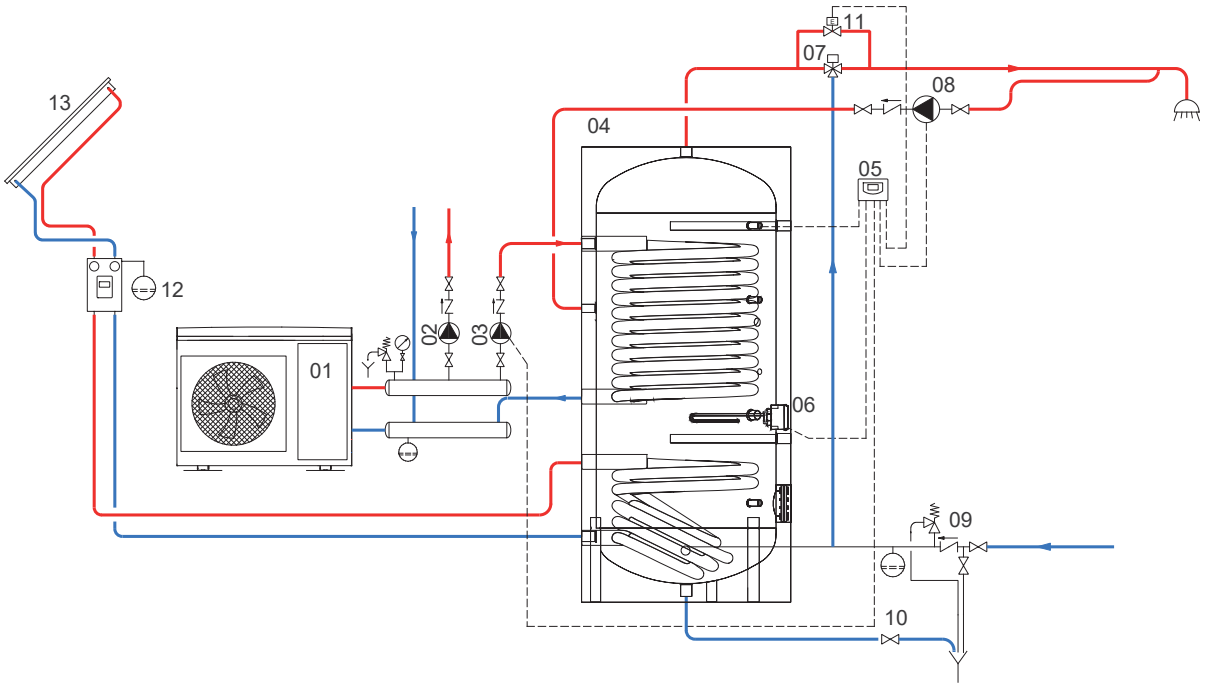

01	Generator (Heat pump)	05	Easy Control electronic display/ thermostat	09	Hydraulic safety group	13	Solar panels
02	Heating system circulation group	06	Electric immersion heater (optional)	10	Blowdown valve		
03	D.H.W. circulation group	07	Thermostatic mixing valve	11	By-pass solenoid valve		
04	BOLLY® 2 XL	08	D.H.W. recirculation group	12	Solar system circulation group		

BOLLY® 1 XL INOX

STAINLESS STEEL 316L DOMESTIC HOT WATER CALORIFIER WITH 1 FIXED OVERSIZE STAINLESS STEEL HEAT EXCHANGER WITH DOUBLE SPIRAL COIL



APPLICATION
Production and storage of domestic hot water (DHW).
MATERIAL
Stainless Steel 316 L suitable for domestic hot water
HEAT EXCHANGER
N° 1 fixed oversize stainless steel heat exchanger with double spiral coil.
INSULATION
- HARD: High thermal insulation with ecological polyurethane hard foam.
- SOFT: NOFIRE® polyester fleece 100% made of recyclable material, with high thermal insulation. Fire resistance class B-s2d0 according to EN 13501. Grey PVC external lining.

CATHODE PROTECTION
Magnesium anode.
DRAIN
External confluence through drain connection.
GASKET- FLANGE PLATE
Silicone gaskets suitable for water intended for human consumption (tested according to 98/83/CE), max temperature up to 200°C. Stainless steel exchanger head.
WARRANTY
5 years - See general sales conditions and warranty
ACCESSORIES AND SPARE PARTS
See Accessories section for the entire list.


316L STAINLESS STEEL DHW STORAGE


316L STAINLESS STEEL HEAT EXCHANGER



BOLLY® 1 XL XB

Model	HARD FOAM insulation	HEAT EXCHANGER SURFACE	ENERGY EFFICIENCY CLASS
	Art. Nr.	[m²]	
200	3105052300001	1,95	**B**
300	3105052300002	3,5	**B**
500	3105052300003	5,5	**C**



cordivari.com/erp



On line ErP label tool



BOLLY® 1 XL XC

Model	DISMOUNTABLE SOFT FLEECE insulation	HEAT EXCHANGER SURFACE	ENERGY EFFICIENCY CLASS
	Art. Nr.	[m²]	
800	3105052300016	6	**C**
1000	3105052300018	6	**C**

ACCESSORIES

ELECTRIC IMMERSION HEATERS

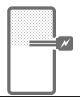

Mod.	Heated volume by electric immersion heater [lt]	MONOPHASE 1,5 kW	MONOPHASE 2 kW	MONOPHASE 3 kW
		5240000000051	5240000000052	5240000000053
		Ignition time from 10 °C to 45 °C with electric immersion heaters [min]		
200	67	120	90	60
300	72	129	97	64
500	114	204	153	102
800	232	416	312	208
1000	346	620	465	310

"Easy Control" Electronic Display-mounted on tank

ART. NR.	FOR MODELS
5005000310002	XC
5005000310003	XB



Thermometer

Art. Nr.
5032240000107
5 units box



P.E.D. product designed and produced in conformity to the article 4.3 of directive 2014/68/UE - ErP Ecodesgin directive 2009/125/CE

BOLLY® **1 XL INOX**

STAINLESS STEEL 316L DOMESTIC HOT WATER CALORIFIER WITH 1 FIXED OVERSIZE STAINLESS STEEL HEAT EXCHANGER WITH DOUBLE SPIRAL COIL

STORAGE		HEAT EXCHANGER	
Pmax	Tmax	Pmax	Tmax
6 bar	95 °C	12 bar	110 °C

CORDIVARI Lab

TÜV Rheinland Energie und Umwelt GmbH states that test procedures and Cordivari LAB are certified conforming to European standard EN 15332, as indicated by Ecodesign ErP Directive.

TESTED ErP

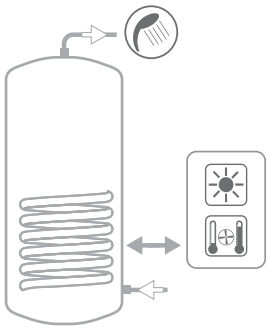

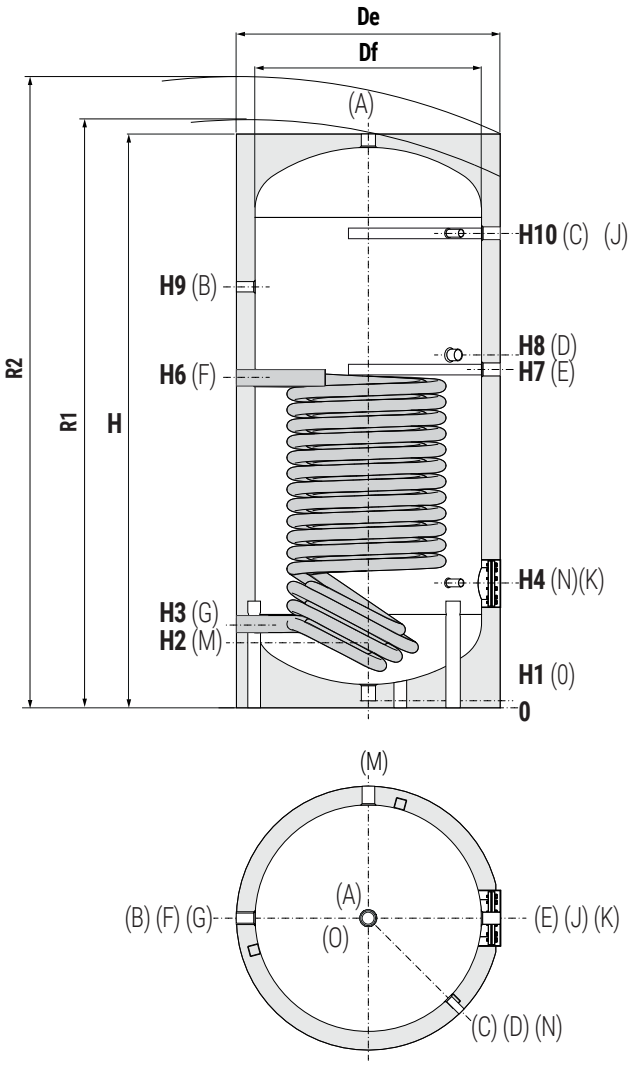

A	Domestic hot water circuit outlet
B	Recirculation 1" F
C	Connection for instrumentation 1/2" F
D	Connection for electric immersion heater
E	Connection for magnesium anode 1"1/4 F
F	Primary circuit inlet 1"1/4 F
G	Primary circuit outlet 1"1/4 F
K	Blind flange for inspection
M	Domestic cold water circuit inlet
N	Connection for instrumentation 1/2" F
O	Drain
12	Domestic hot water outlet

BOLLY® 1 XL INOX - HARD FOAM INSULATION (XB)

Model	Volume	De	H	R2	H1	H2	H3	H4	H6	H7	H8	H9	H10	K	A	D	M	O
	[lt]	[mm]													Connections F			
200	191	550	1446	1547	71	206	296	326	713	866	926	1100	1206	Øi120/Øe180	1"	1"1/2	1"	1/2"
300	293	650	1501	1636	76	236	326	386	1022	1036	1096	1176	1236	Øi120/Øe180	1"	1"1/2	1"	1/2"
500	503	750	1796	1946	71	256	356	411	1232	1272	1340	1396	1496	Øi120/Øe180	1"	1"1/2	1"	1/2"

BOLLY® 1 XLINOX - DISMOUNTABLE SOFT FLEECE INSULATION (XC)

Model	Volume	Df	De	H	R1	R2	H1	H2	H3	H4	H6	H7	H8	H9	H10	K	A	D	M	O
	[lt]	[mm]															Connections F			
300	759	790	1010	1943	2105	2195	114	323	423	478	1151	1223	1293	1331	1533	Øi120/Øe180	1"1/4	2"	1"	3/4"
500	902	800	1020	2192	2340	2425	112	317	412	477	1225	1282	1337	1557	1792	Øi120/Øe180	1"1/2	2"	1"1/4	3/4"

P.E.D. product designed and produced in conformity to the article 4.3 of directive 2014/68/UE - ErP Ecodesgin directive 2009/125/CE

BOLLY® **1 XL INOX**

HEAT EXCHANGERS TECHNICAL DATA



Data have been calculated on following basis:
1) Primary circuit at T1 and proper energy source;
2) Production of DHW in continuous way from 10 °C at t2;
3) DHW that can be taken in the first 10' and in the first hour from storage at 60°C, input 10°C and output 45°C;
4) Sanitary water according to UNI CTI 8065.

Model	Primary Flow rate	Ignition time (minutes) from 10 °C to t2 and primary at T1				Maximum power exchange (kW) with primary at T1, secondary within 10-45 °C and constant use of DHW production				DHW continuous production lt/h within 10-45 °C and primary at T1			
	[m³/h]	T1/t2				T1				T1			
		55/50	65/60	70/60	80/60	55	65	70	80	55	65	70	80
200	3	41	43	30	20	20,6	30,6	35,5	45,7	510	755	879	1130
	1,5	48	50	36	24	19,0	27,5	31,7	40,3	467	678	784	996
300	4	36	38	27	18	36,9	54,1	62,8	80,3	911	1340	1555	1989
	2	43	45	32	21	33,8	48,3	55,5	69,9	834	1195	1374	1732
500	5	41	42	30	20	57,4	83,7	96,8	123,2	1420	2073	2396	3053
	2,5	49	52	37	25	52,4	74,1	84,8	106,0	1296	1835	2100	2627
800	6	55	57	41	27	63,4	92,7	107,3	136,8	1568	2295	2658	3392
	3	66	69	50	33	58,2	82,8	94,8	118,9	1441	2050	2349	2948
1000	6	65	68	49	32	63,4	92,7	107,3	136,8	1568	2295	2658	3390
	3	78	82	59	40	58,2	82,8	94,8	118,9	1441	2050	2349	2947

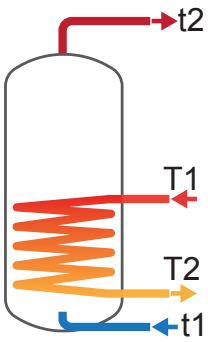

Model	Primary Flow rate	DHW produced in the first 10 minutes in lt/10' input 10 °C output 45 °C, storage at t2 and primary at T1				DHW produced in the first hour in lt/60' input 10 °C output 45 °C, storage at t2 and primary at T1				Heat exchanger pressure loss	
	[m³/h]	T1/t2				T1/t2				[mm H_2O]	[mbar]
		55/50	65/60	70/60	80/60	55/50	65/60	70/60	80/60		
200	3	282	399	419	461	524	877	976	1177	283	28
	1,5	277	386	403	439	503	815	900	1070	80	8
300	4	449	642	678	750	884	1491	1662	2010	729	71
	2	441	618	648	707	847	1374	1518	1804	209	20
500	5	754	1064	1118	1227	1435	2377	2635	3161	1567	154
	2,5	742	1024	1069	1156	1375	2187	2398	2820	454	45
800	6	1065	1467	1527	1650	1815	2920	3211	3798	2337	229
	3	1052	1426	1476	1576	1755	2724	2963	3442	677	66
1000	6	1228	1671	1732	1854	1979	3124	3415	4001	2337	229
	3	1216	1630	1680	1780	1918	2929	3168	3646	677	66

HEAT EXCHANGERS PRESSURE LOSS

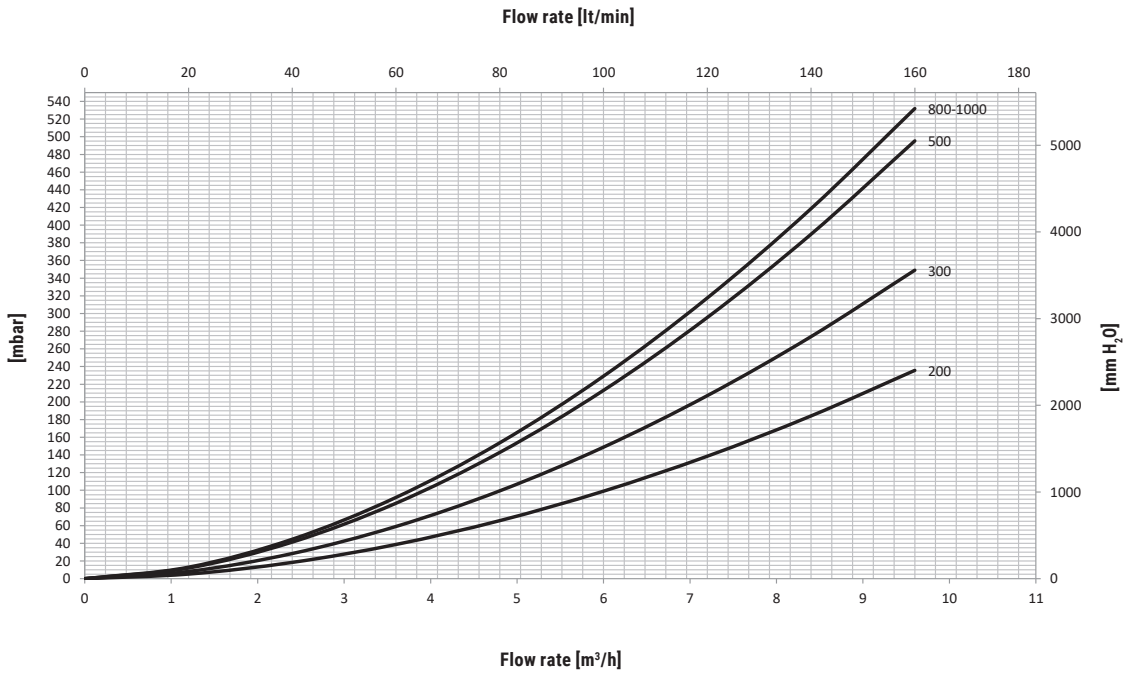

BOLLY® **1 XL INOX**

HEAT EXCHANGERS TECHNICAL DATA



Heat Exchanger output referred to temperature and flow rate of primary circuit and with secondary at 10/45°C at maximum withdrawal of producible DHW (Upper limit of the curves referred to maximum primary flow rate in the heat exchanger, while the lower limit in the curves refer to the minimum primary flow rate)

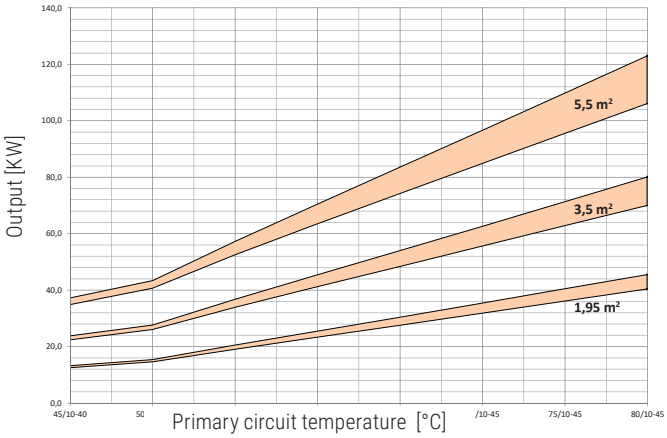

Heat exchanger surface [m²]	1,95		3,5		5,5	
Flow rate [m³/h]	MAX	MIN	MAX	MIN	MAX	MIN
	3	1,5	4	2	5	2,5

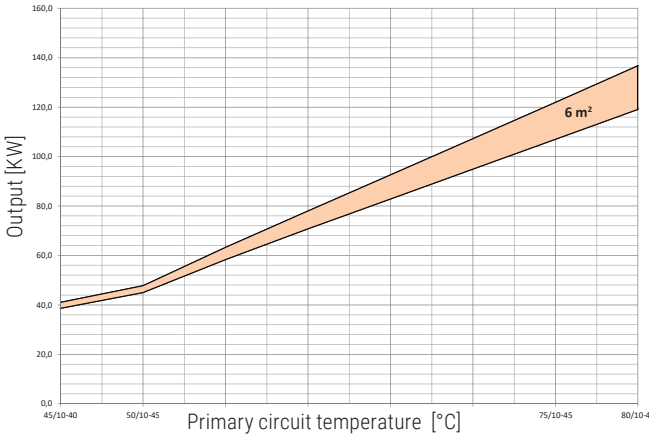

Heat exchanger surface [m²]	6	
Flow rate [m³/h]	MAX	MIN
	6	3

EXAMPLE OF INSTALLATION WITH **BOLLY® 1 XL INOX**

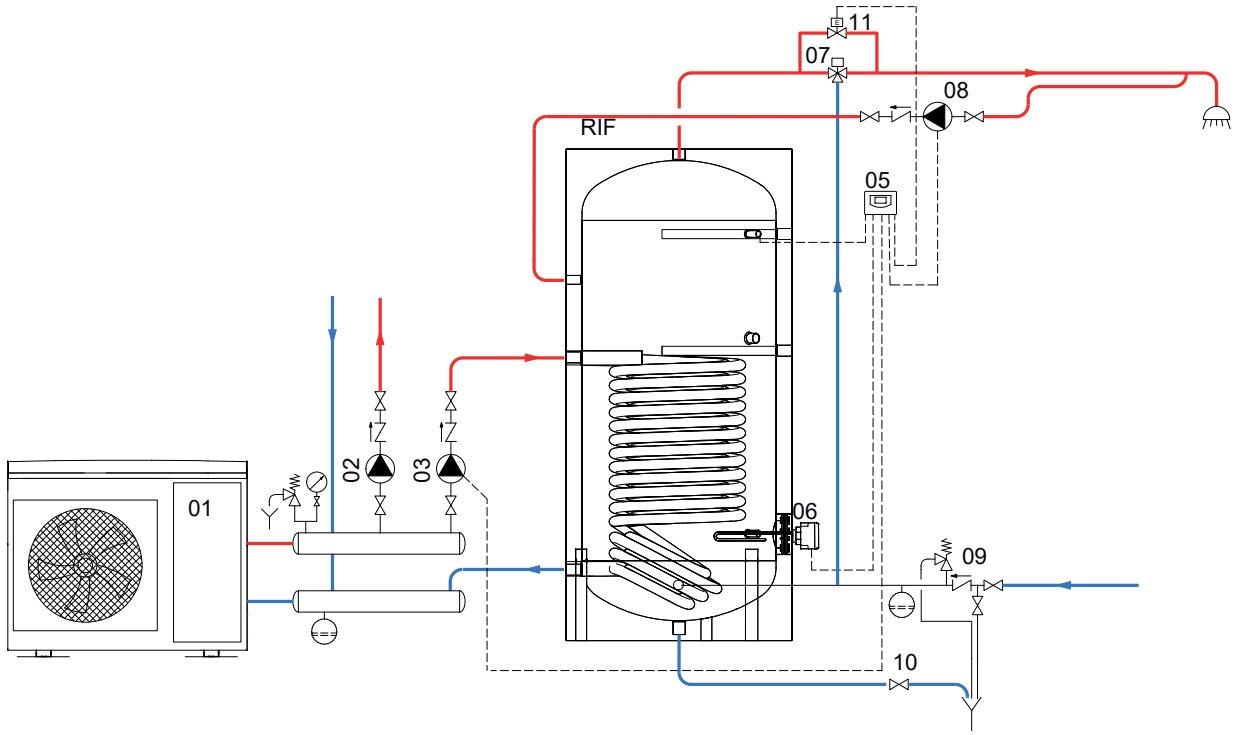

01	Generator (Heat pump)	05	Easy Control electronic display/ thermostat	09	Hydraulic safety group
02	Heating system circulation group	06	Electric immersion heater (optional)	10	Blowdown valve
03	D.H.W. circulation group	07	Thermostatic mixing valve	11	By-pass solenoid valve
04	Bolly XL	08	D.H.W. recirculation group		

BOLLY® **2 XL INOX**

STAINLESS STEEL 316L DOMESTIC HOT WATER CALORIFIER WITH 2 FIXED OVERSIZE STAINLESS STEEL HEAT EXCHANGERS WITH DOUBLE SPIRAL COIL



APPLICATION
Production and storage of domestic hot water (DHW).
MATERIAL
Stainless Steel 316 L suitable for domestic hot water
HEAT EXCHANGER
N° 2 fixed oversize stainless steel heat exchanger with double spiral coil.
INSULATION
- HARD: High thermal insulation with ecological polyurethane hard foam.
- SOFT: NOFIRE® polyester fleece 100% made of recyclable material, with high thermal insulation. Fire resistance class B-s2d0 according to EN 13501. Grey PVC external lining.

CATHODE PROTECTION
Magnesium anode.
DRAIN
External confluence through drain connection.
GASKET- FLANGE PLATE
Silicone gaskets suitable for water intended for human consumption (tested according to 98/83/CE), max temperature up to 200°C. Stainless steel exchanger head.
WARRANTY
5 years - See general sales conditions and warranty
ACCESSORIES AND SPARE PARTS
See Accessories section for the entire list.





cordivari.com/erp



On line ErP label tool



BOLLY® 2 XL XB

Model	HARD FOAM insulation	HEAT EXCHANGER SURFACE Upper	Lower	ENERGY EFFICIENCY CLASS
	Art. Nr.	[m²]		
200	3135052010212	1,4	0,6	**B**
300	3135052010203	2,4	1	**B**
500	3135052010215	4,0	1,4	**C**



BOLLY® 2 XL XC

Model	DISMOUNTABLE SOFT FLEECE insulation	HEAT EXCHANGER SURFACE Upper	Lower	ENERGY EFFICIENCY CLASS
	Art. Nr.	[m²]		
800	3135052010218	5	1,8	**C**
1000	3135052010219	6	3,0	**C**

ACCESSORIES

ELECTRIC IMMERSION HEATERS

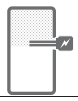

Mod.	Heated volume by electric immersion heater [lt]	MONOPHASE **1,5** kW	**2** kW	**3** kW
		5240000000051	5240000000052	5240000000053
		Ignition time from 10 °C to 45 °C with electric immersion heaters [min]		
200	98	176	132	88
300	169	274	206	137
500	305	496	372	248
800	420	752	564	376
1000	534	956	717	478

"Easy Control" Electronic Display-mounted on tank

ART. NR.	FOR MODELS
5005000310002	XC
5005000310003	XB



Thermometer

Art. Nr.
5032240000107
5 units box



P.E.D. product designed and produced in conformity to the article 4.3 of directive 2014/68/UE - ErP Ecodesgin directive 2009/125/CE

BOLLY® **2 XL INOX**

STAINLESS STEEL 316L DOMESTIC HOT WATER CALORIFIER
WITH 2 FIXED OVERSIZE STAINLESS STEEL HEAT EXCHANGERS WITH DOUBLE SPIRAL COIL

STORAGE		HEAT EXCHANGER	
Pmax	Tmax	Pmax	Tmax
6 bar	95 °C	12 bar	110 °C

CORDIVARI Lab

TÜV Rheinland Energie und Umwelt GmbH states that test procedures and Cordivari LAB are certified conforming to European standard EN 15332, as indicated by Ecodesign ErP Directive.

TESTED ErP

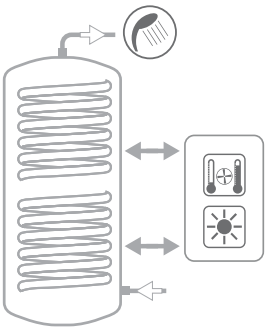

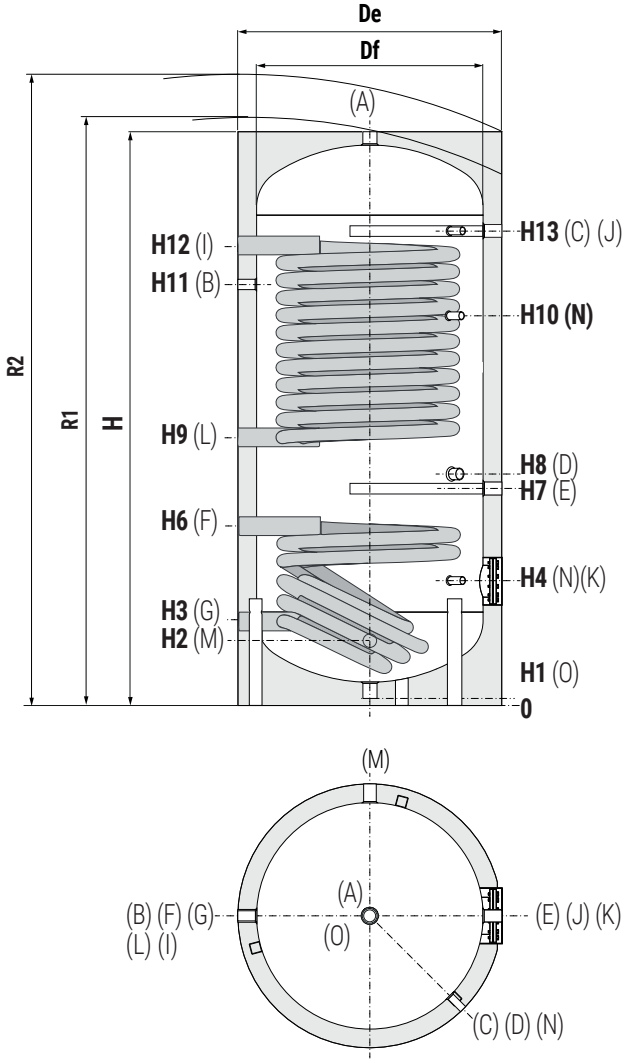

A	Domestic hot water outlet
B	Recirculation 1" F
C	Connection for instrumentation 1/2" F
D	Connection for electric immersion heater
E	Connection for magnesium anode 1"1/4 F
F	Upper heat exchanger inlet 1"1/4 F
G	Lower heat exchanger outlet 1"1/4 F
I	Upper heat exchanger inlet 1"1/4 F
K	Blind flange for inspection
L	Upper heat exchanger outlet 1"1/4 F
M	Domestic cold water circuit inlet
N	Connection for instrumentation 1/2" F
O	Drain

BOLLY® 2 XL - HARD FOAM INSULATION (XB)

Model	Vol.	De	H	R2	H1	H2	H3	H4	H6	H7	H8	H9	H10	H11	H12	H13	K	A	D	M	O
	[lt]	[mm]																Connections F			
200	191	550	1446	1555	71	206	296	326	533	646	726	801	886	1046	1206	960	Øi120/Øe180	1"	1"1/2	1"	1/2"
300	293	650	1501	1640	76	236	326	386	572	626	706	741	1096	989	1236	1236	Øi120/Øe180	1"	1"1/2	1"	1/2"
500	503	750	1796	1955	71	256	356	411	601	686	766	810	1299	1148	1485	1496	Øi120/Øe180	1"	1"1/2	1"	1/2"

BOLLY® 2 XL - DISMOUNTABLE SOFT FLEECE INSULATION (XC)

Model	Vol.	Df	De	H	R1	R2	H1	H2	H3	H4	H6	H7	H8	H9	H10	H11	H12	H13	K	A	D	M	O
	[lt]	[mm]																		Connections F			
800	759	790	1010	1943	2105	2195	114	323	423	478	664	696	756	800	1383	1213	1548	1568	Øi120/Øe180	1"1/4	2"	1"	3/4"
1000	902	800	1020	2192	2340	2425	112	317	412	477	873	908	963	1008	1564	1452	1756	1792	Øi120/Øe180	1"1/2	2"	1"1/4	3/4"

P.E.D. product designed and produced in conformity to the article 4.3 of directive 2014/68/UE - ErP Ecodesgin directive 2009/125/CE

BOLLY® **2 XL INOX**

HEAT EXCHANGERS TECHNICAL DATA



Data have been calculated on following basis:
1) Primary circuit at T1 and proper energy source;
2) Production of DHW in continuous way from 10 °C at t2;
3) DHW that can be taken in the first 10' and in the first hour from storage at 60°C, input 10°C and output 45°C;
4) Sanitary water according to UNI CTI 8065.

UPPER HEAT EXCHANGER

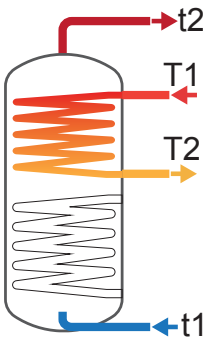

Model	Primary Flow rate	Ignition time (minutes) from 10 °C to t2 and primary at T1				Maximum power exchange (kW) with primary at T1, secondary within 10-45 °C and constant use of DHW production				DHW continuous production lt/h within 10-45 °C and primary at T1			
	[m³/h]	T1/t2				T1				T1			
		55/50	65/60	70/60	80/60	55	65	70	80	55	65	70	80
200	3	26	27	19	13	15,0	22,4	26,1	33,7	370	554	646	834
	1,5	30	31	22	15	13,9	20,4	23,7	30,3	343	504	585	748
300	4	27	28	20	13	25,8	38,3	44,5	57,3	637	947	1102	1417
	2	31	33	23	16	23,9	34,8	40,2	51,1	591	860	993	1265
500	5	31	32	23	15	42,7	62,8	72,9	93,4	1054	1554	1804	2314
	2,5	36	38	27	18	39,4	56,6	65,1	82,2	974	1400	1611	2036
800	6	34	35	25	17	53,5	78,6	91,2	116,7	1322	1947	2259	2890
	3	40	42	30	20	49,5	70,9	81,5	102,7	1224	1756	2019	2545
1000	6	37	38	27	18	63,4	92,7	107,3	136,8	1568	2296	2657	3389
	3	44	46	33	22	58,2	82,8	94,8	118,9	1441	2050	2350	2949

Model	Primary Flow rate	DHW produced in the first 10 minutes in lt/10' input 10 °C output 45 °C, storage at t2 and primary at T1				DHW produced in the first hour in lt/60' input 10 °C output 45 °C, storage at t2 and primary at T1				Heat exchanger pressure loss	
	[m³/h]	T1/t2				T1/t2				[mm H_2O]	[mbar]
		55/50	65/60	70/60	80/60	55/50	65/60	70/60	80/60		
200	3	190	221	236	268	425	572	645	796	1103	108
	1,5	186	213	226	253	403	532	596	727	319	31
300	4	335	386	412	465	738	986	1110	1362	552	54
	2	327	372	394	439	701	917	1023	1241	156	15
500	5	594	678	719	804	1262	1662	1862	2270	1210	119
	2,5	581	652	687	758	1198	1539	1707	2047	348	34
800	6	795	899	951	1056	1632	2132	2382	2886	2009	197
	3	778	867	911	998	1553	1979	2190	2610	580	57
1000	6	987	1108	1169	1291	1980	2563	2851	3437	2337	229
	3	966	1067	1117	1217	1878	2366	2605	3085	677	66

LOWER HEAT EXCHANGER

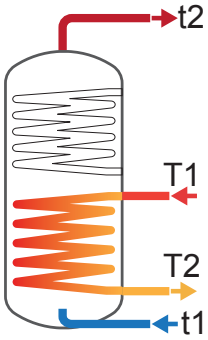

Model	Primary Flow rate	Ignition time (minutes) from 10 °C to t2 and primary at T1				Maximum power exchange (kW) with primary at T1, secondary within 10-45 °C and constant use of DHW production				DHW continuous production lt/h within 10-45 °C and primary at T1			
	[m³/h]	T1/t2				T1				T1			
		55/50	65/60	70/60	80/60	55	65	70	80	55	65	70	80
200	3	125	131	91	59	6,6	9,9	11,6	15,1	161	244	286	372
	1,5	138	144	100	65	6,2	9,3	10,8	14,0	151	227	265	344
300	4	114	119	83	54	11,1	16,6	19,5	25,2	271	409	480	623
	2	124	129	91	60	10,5	15,6	18,2	23,4	257	384	448	578
500	5	140	145	102	67	15,6	23,4	27,3	35,4	382	576	674	874
	2,5	151	157	111	73	14,8	22,0	25,6	32,9	364	542	631	814
800	6	163	169	119	78	20,1	30,1	35,2	45,6	494	743	870	1128
	3	176	183	130	86	19,1	28,4	33,0	42,5	471	700	816	1050
1000	6	120	125	88	58	32,9	49,0	57,1	73,6	812	1212	1412	1821
	3	134	140	100	66	31,0	45,3	52,4	66,9	765	1120	1297	1656

Model	Primary Flow rate	DHW produced in the first 10 minutes in lt/10' input 10 °C output 45 °C, storage at t2 and primary at T1				DHW produced in the first hour in lt/60' input 10 °C output 45 °C, storage at t2 and primary at T1				Heat exchanger pressure loss	
	[m³/h]	T1/t2				T1/t2				[mm H_2O]	[mbar]
		55/50	65/60	70/60	80/60	55/50	65/60	70/60	80/60		
200	3	300	313	320	335	402	468	501	570	579	57
	1,5	298	311	317	330	394	454	485	548	163	16
300	4	464	487	499	522	636	746	802	917	326	32
	2	461	483	493	515	624	725	777	881	89	9
500	5	782	815	831	864	1024	1179	1258	1418	591	58
	2,5	779	809	824	854	1010	1152	1224	1370	163	16
800	6	1167	1208	1229	1272	1480	1679	1780	1986	960	94
	3	1163	1201	1220	1259	1461	1645	1737	1924	268	26
1000	6	1424	1490	1524	1592	1938	2258	2418	2746	1354	133
	3	1416	1475	1505	1565	1901	2185	2326	2613	385	38

BOLLY® **2 XL INOX**

HEAT EXCHANGERS TECHNICAL DATA



Heat Exchanger output referred to temperature and flow rate of primary circuit and with secondary at 10/45°C at maximum withdrawal of producible DHW (Upper limit of the curves referred to maximum primary flow rate in the heat exchanger, while the lower limit in the curves refer to the minimum primary flow rate)

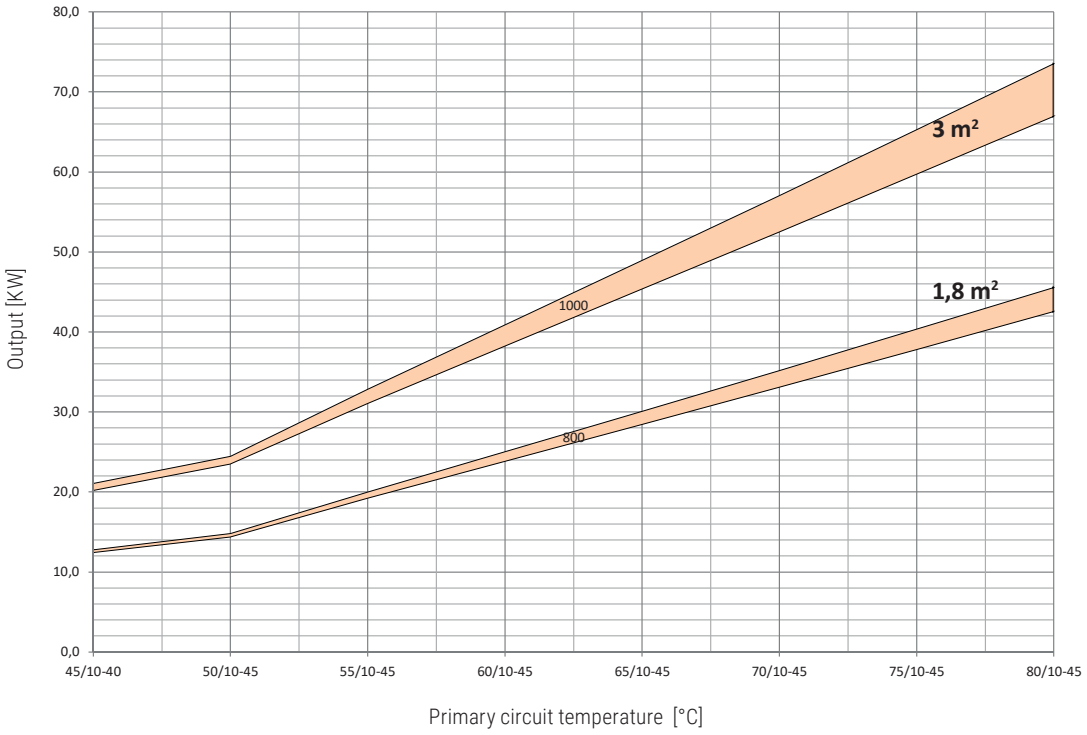

Heat exchanger surface [m²]	1,8		3	
Flow rate [m³/h]	MAX	MIN	MAX	MIN
	6	3	6	3

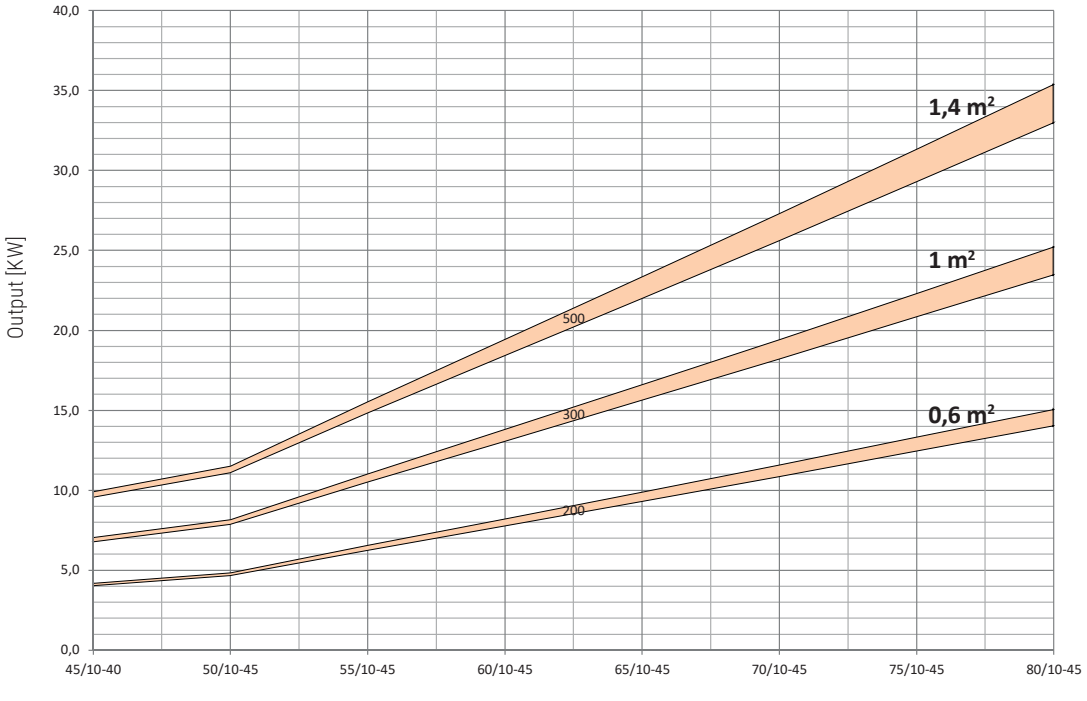

Heat exchanger surface [m²]	0,6		1		1,4	
Flow rate [m³/h]	MAX	MIN	MAX	MIN	MAX	MIN
	3	1,5	4	2	5	2,25



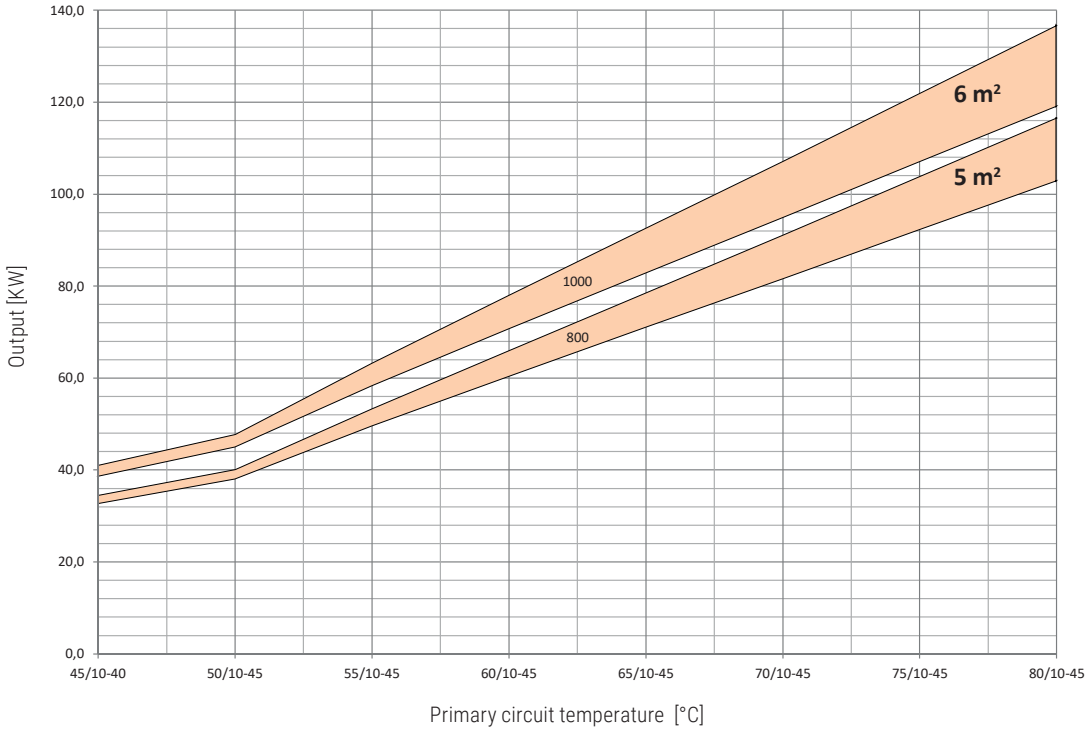

Heat exchanger surface [m²]	5		6	
Flow rate [m³/h]	MAX	MIN	MAX	MIN
	6	3	6	3

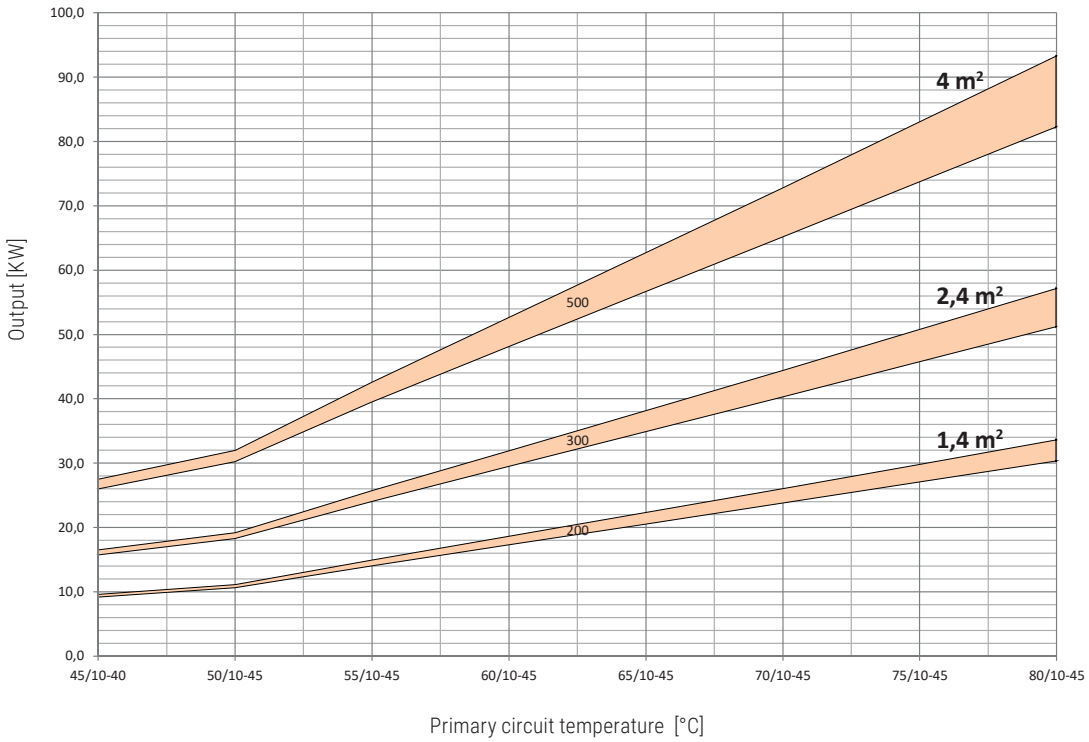

Heat exchanger surface [m²]	1,4		2,4		4	
Flow rate [m³/h]	MAX	MIN	MAX	MIN	MAX	MIN
	3	1,5	4	2	5	2,5

BOLLY® **2 XL INOX**

HEAT EXCHANGERS PRESSURE LOSS



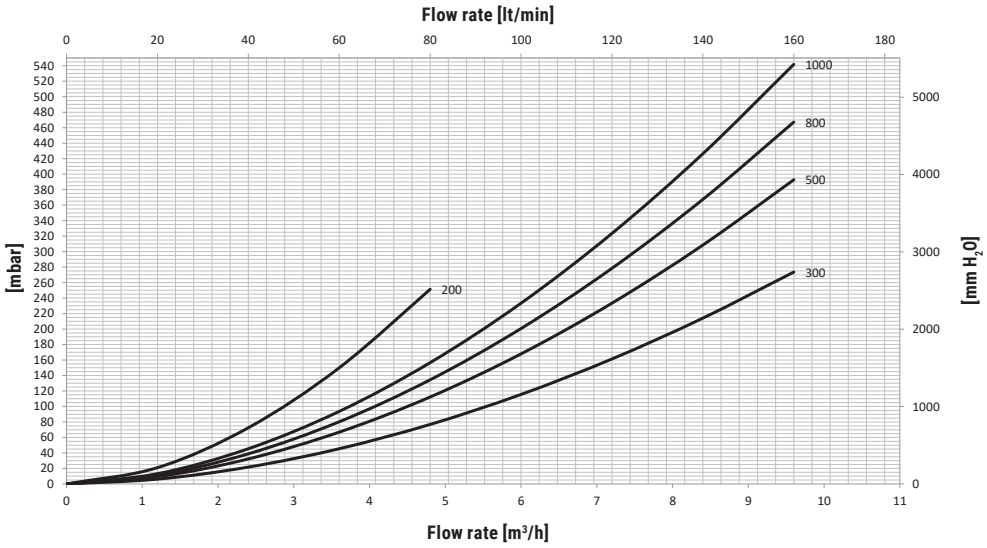

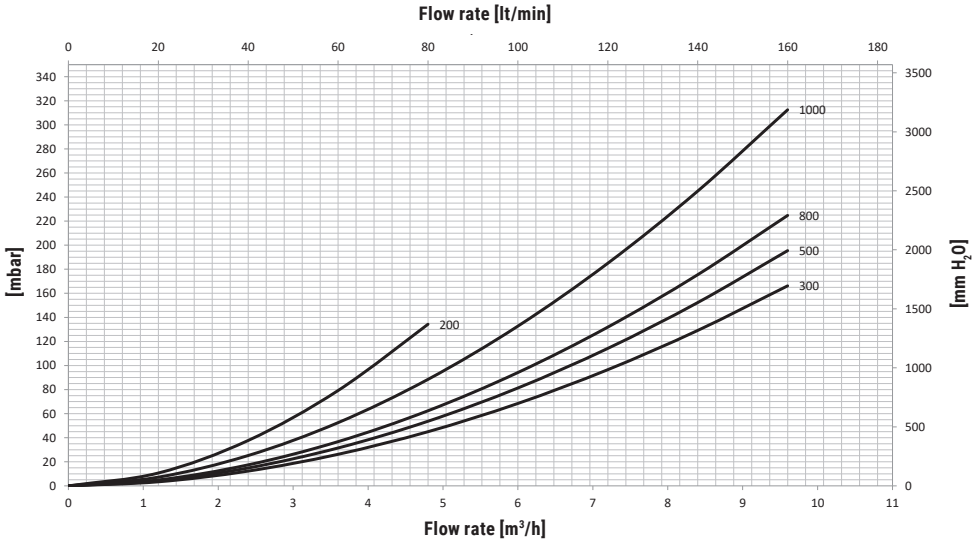

EXAMPLE OF INSTALLATION WITH **BOLLY® 2 XL INOX**

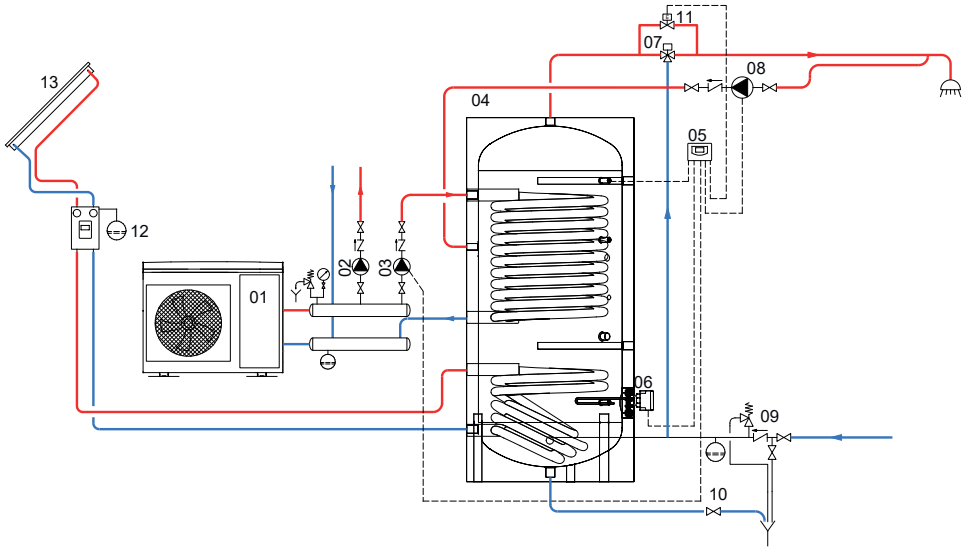

01	Generator (Heat pump)	05	Easy Control electronic display/ thermostat	09	Hydraulic safety group	13	Solar panels
02	Heating system circulation group	06	Electric immersion heater (optional)	10	Blowdown valve		
03	D.H.W. circulation group	07	Thermostatic mixing valve	11	By-pass solenoid valve		
04	Bolly 2 XL	08	D.H.W. recirculation group	12	Solar system circulation group		

BOLLY® **HY**

POLYWARM® COATED DOMESTIC HOT WATER CALORIFIER WITH 1 FIXED HEAT EXCHANGER AND ENERGY BUFFER FOR HEAT PUMPS



APPLICATION
Production and storage of domestic hot water (DHW). Heating/cooling buffer tank for heat pumps.
MATERIAL
DHW STORAGE: Mild steel Polywarm® coated (Attestation ACS - SSICA - DVGW - W270 - WRAS)
ENERGY BUFFER: Mild steel.
HEAT EXCHANGER
Mild steel Polywarm® coated heat exchanger.

INSULATION
High thermal insulation with ecological polyurethane hard foam. Grey PVC external lining.
CATHODE PROTECTION (DHW STORAGE)
Magnesium anode.
WARRANTY
5 years - See general sales conditions and warranty
ACCESSORIES AND SPARE PARTS
See Accessories section for the entire list.

NEW



BOLLY® HY

Model	HARD FOAM insulation Art. Nr.	Power of combinable heat pump [kWt]	HEAT EXCHANGER SURFACE [m²]	ENERGY EFFICIENCY CLASS
300	3105162320707	9-14	2,9	**B**
500	3105162320708	14-20	3,9	**C**



cordivari.com/erp



On line ErP label tool

ACCESSORIES

ELECTRIC IMMERSION HEATERS



Mod.	Heated volume by electric immersion heater [lt]	MONOPHASE 1,5 kW	MONOPHASE 2 kW	MONOPHASE 3 kW
		5240000000051	5240000000052	5240000000053
		Ignition time from 10 °C to 45 °C with electric immersion heaters [min]		
300	245	439	329	219
500	424	759	569	380

"Easy Control" Electronic Display-mounted on tank

ART. NR.	FOR MODELS
5005000310003	WB



Thermometer

Art. Nr.
5032240000107
5 units box



Titanium electronic anode

Art. Nr.	Model
5200000000008	300
5200000000009	500



P.E.D. product designed and produced in conformity to the article 4.3 of directive 2014/68/UE - ErP Ecodesgin directive 2009/125/CE

BOLLY® **HY**

POLYWARM® COATED DOMESTIC HOT WATER CALORIFIER WITH 1 FIXED HEAT EXCHANGER AND ENERGY BUFFER FOR HEAT PUMPS

STORAGE		HEAT EXCHANGER		VOLANO TERMICO	
Pmax	Tmax	Pmax	Tmax	Pmax	Tmax
6 bar	90 °C	12 bar	110 °C	4 bar	-10/+95 °C

CORDIVARI Lab

TÜV Rheinland Energie und Umwelt GmbH states that test procedures and Cordivari LAB are certified conforming to European standard EN 15332, as indicated by Ecodesign ErP Directive.

TESTED ErP

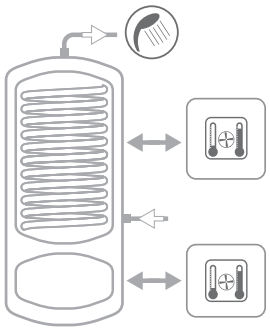

See TECHNICAL SUPPORT chapter for example of installation

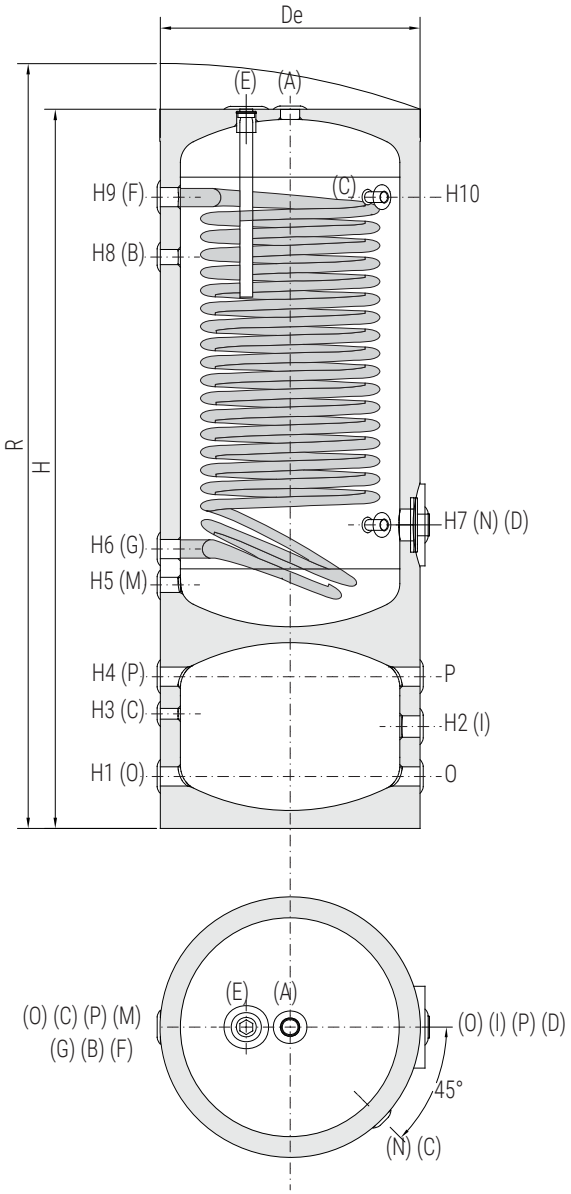

A	Domestic hot water outlet 1" 1/4 F
B	Recirculation / Domestic hot water outlet 1" F
C	Connection for instrumentation 1/2" F
D	Connection for electric immersion heater 1" 1/2 F
E	Connection for magnesium anode
F	Primary circuit inlet 1" 1/4 F
G	Primary circuit outlet 1" 1/4 F
I	Connection for electric immersion heater 1" 1/2 F
M	Domestic cold water circuit inlet 1" F
N	Connection for instrumentation 1/2" F
O	Heating return/to generator 1"1/4 F
P	Heating delivery/from generator 1"1/4 F

Model	DHW storage volume	Buffer tank volume	De	H	R	H1	H2	H3	H4	H5	H6
	[lt]		[mm]								
300	291	86	650	1805	1930	130	255	287	380	610	700
500	498	114	750	1910	2060	145	253	268	361	621	710

Model	H7	H8	H9	H10	A-F-G	B	C-N	M	D-I	P-O
	[mm]				Connections F					
300	760	1431	1581	1581	1"1/4	1"	1/2"	1"	1"1/2	1"1/4
500	775	1515	1675	1675	1"1/4	1"	1/2"	1"	1"1/2	1"1/4

P.E.D. product designed and produced in conformity to the article 4.3 of directive 2014/68/UE - ErP Ecodesgin directive 2009/125/CE

PUFFERMAS® **1 DOMUS**

BUFFER TANK FOR HEAT PUMP WITH COMPACT DHW INSTANT PREPARATION UNIT



APPLICATION
Storage by stratification of heating water and immediate production of domestic hot water (DHW) with high flow rates and performances.
MATERIAL
Mild steel construction with exterior paint. No anti-corrosion treatment required due to the buffer's closed circuit system.
DHW HEAT EXCHANGER MODULE:
Integrated immediate DHW production module with Stainless steel 316L brazed plate heat exchanger.
CIRCULATION PUMP
A pump is embedded on the top of the tank to allow the circulation of technical water through the plate heat exchanger, only when there is levy of DHW. Circulator speed: 700/4300 (min/max) n rpm; Power consumption: 1,8/43 (min/max) W; Current drawn 0,02/0,39 (min/max); Power supply 230V/1Ph/50Hz.

TECHNICAL DESCRIPTION
Puffermas® 1 DOMUS combines the characteristic use of a buffer with those of a rapid DHW producer, without the accumulation of domestic hot water. The DHW heat exchanger module ensures excellent performances even at a low flow rate of domestic hot water.
INSULATION
Buffer tank: high thermal insulation with ecological polyurethane hard foam.
Dhw module: insulating PST cover.
Grey PVC external lining.
WARRANTY
5 years (tank)
See general sales conditions and warranty for electrical parts.
ACCESSORIES AND SPARE PARTS
See Accessories section for the entire list.

NEW

IMMEDIATE D.H.W. PRODUCTION

cordivari.com/erp

On line ErP label tool

PUFFERMAS® 1 DOMUS

Model	HARD FOAM insulation	DHW module max/min flow rate	ENERGY EFFICIENCY CLASS
	Art. Nr.	[l/min]	
200	3251162314780	2/40	**B**
300	3251162314781	2/40	**B**



- ***SUITABLE FOR ANY TYPE OF HEAT GENERATOR; IDEAL FOR HEAT PUMPS***
- ***HIGH EXCHANGE EFFICIENCY WITH HIGH ENERGY YIELD FOR DHW***
- ***OPTIMIZED INTERNAL STORAGE STRATIFICATION***
- ***MAXIMUM COMFORT WITH CONSTANT DHW TEMPERATURE AT ANY FLOW RATE***
- ***HIGH SENSIBLITY AND HIGH FLOW RATES (FROM 2 UP TO 40 LT/MIN)***
- ***MAXIMUM SAFETY AND ECONOMICITY***



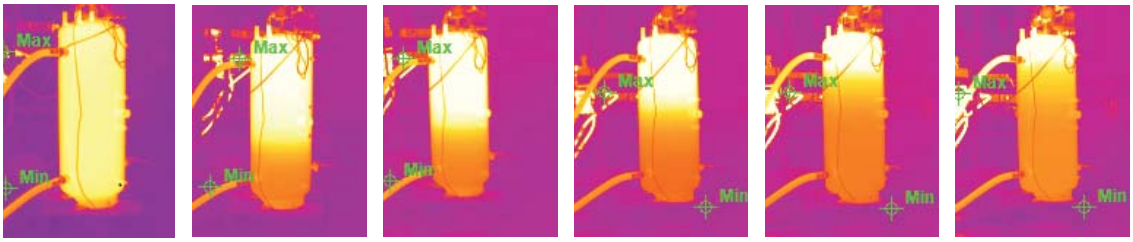

Series of thermographs that illustrate the perfect thermal stratification of the PUFFERMAS® DOMUS during the production of DHW through the integrated module

ACCESSORIES

MONOPHASE Electric immersion heaters



Available kit:	
[Kw]	Tension [V]
da **1,5** a **3**	220 - MONOPHASE
See accessories	

Thermometer

Art. Nr.
5032240000107
5 units box



Recirculationkit for PUFFERMAS® DOMUS

Art. Nr.
5221000000102
DHW circulation group



P.E.D. product designed and produced in conformity to the article 4.3 of directive 2014/68/UE - ErP Ecodesgin directive 2009/125/CE

PUFFERMAS® **1 DOMUS**

BUFFER TANK FOR HEAT PUMP WITH COMPACT DHW INSTANT PREPARATION UNIT

STORAGE		EXCHANGER MODULE	
Pmax	Tmax	Pmax	Tmax
3 bar	99 °C	6 bar	99 °C

CORDIVARI Lab

TÜV Rheinland Energie und Umwelt GmbH states that test procedures and Cordivari LAB are certified conforming to European standard EN 15332, as indicated by Ecodesign ErP Directive.

TESTED ErP

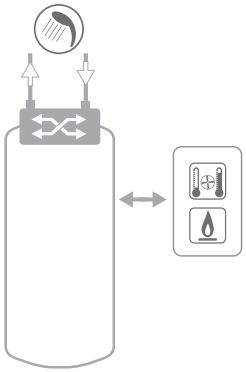

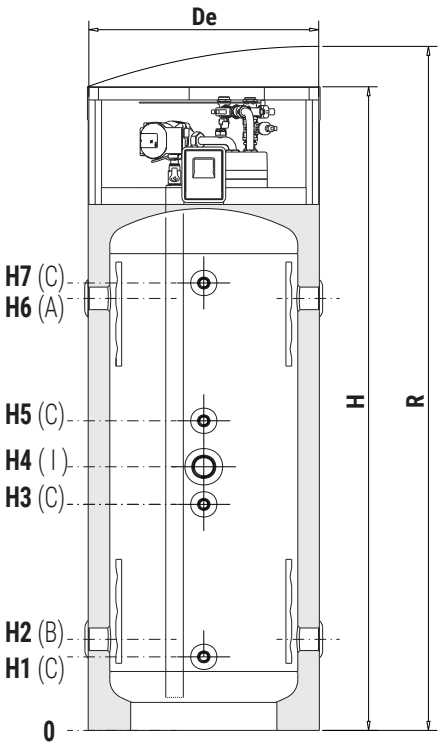

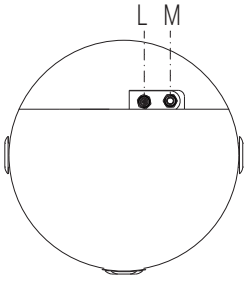

A	Heating delivery/from generator
B	Heating return/to generator
C	Probe
I	Connection for electric immersion heater
L	Domestic hot water outlet
M	Domestic cold water circuit inlet

Model	Volume	De	H	R	H1	H2	H3	H4	H5	H6	H7	A-B-I	C	D-H-L-M
	[lt]	[mm]										Connections F		
200	180	550	1539	1650	176	218	541	631	741	1034	1071	1"1/2	1/2"	3/4"
300	278	650	1580	1720	190	232	555	645	755	1048	1085	1"1/2	1/2"	3/4"

FLOW RATE PERFORMANCE OF DHW

The curves shown in these graphs allow to obtain the flow rate of domestic hot water (DHW) which can be produced by the integrated DHW production module, depending on the temperature of the storage tank / primary circuit (value on the horizontal axis).
The curves are parameterized based on the desired temperature of the DHW and indicate the maximum DHW flow rate that can be produced at that temperature (with inlet temperature at 10°C). The MACS Modules are able to produce all the DHW flow rates included in the area between the minimum activation flow rate and the maximum flow curve of each temperature.

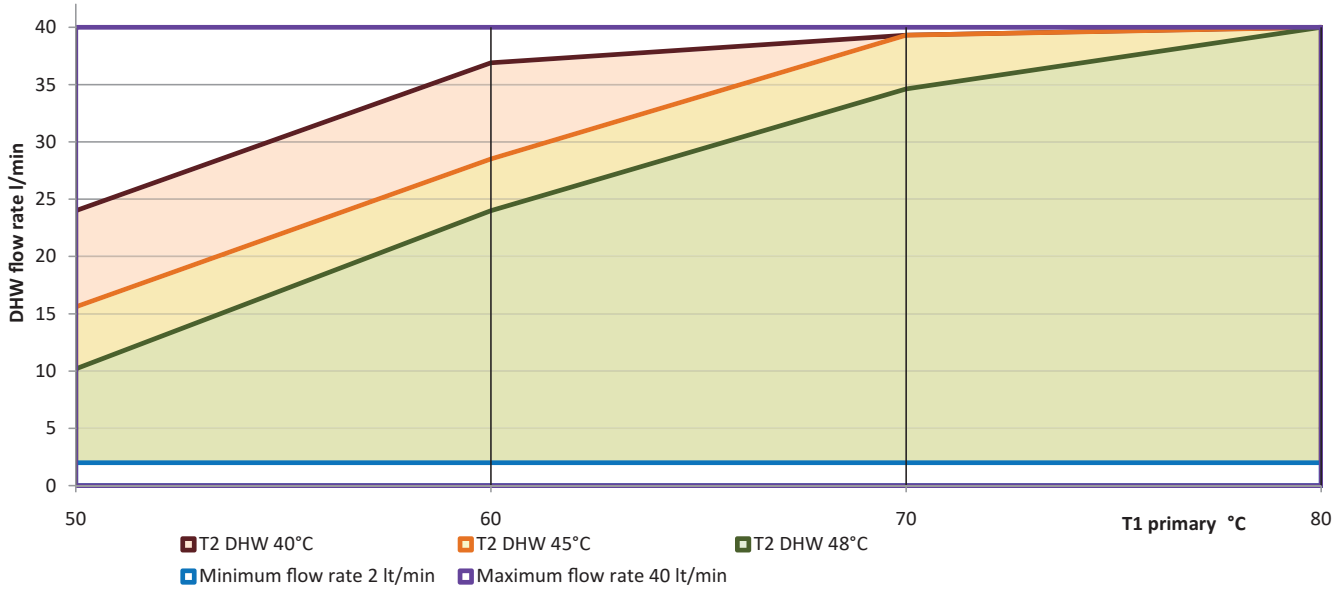

P.E.D. product designed and produced in conformity to the article 4.3 of directive 2014/68/UE - ErP Ecodesgin directive 2009/125/CE

PUFFERMAS® **2 DOMUS**

BUFFER TANK FOR HEAT PUMP WITH COMPACT DHW INSTANT PREPARATION UNIT AND 1 FIXED HEAT EXCHANGER



APPLICATION
Storage by stratification of heating water and immediate production of domestic hot water (DHW) with high flow rates and performances.
MATERIAL
Mild steel construction with exterior paint. No anti-corrosion treatment required due to the buffer's closed circuit system.
DHW HEAT EXCHANGER MODULE:
Integrated immediate DHW production module with Stainless steel 316L brazed plate heat exchanger.
HEATING WATER HEAT EXCHANGER
N° 1 mild steel fixed heat exchanger.
CIRCULATION PUMP
A pump is embedded on the top of the tank to allow the circulation of technical water through the plate heat exchanger, only when there is levy of DHW. Circulator speed: 700/4300 (min/max) n rpm; Power consumption: 1,8/43 (min/max) W; Current drawn 0,02/0,39 (min/max); Power supply 230V/1Ph/50Hz.

TECHNICAL DESCRIPTION
Puffermas® 2 DOMUS combines the characteristic use of a buffer with those of a rapid DHW producer, without the accumulation of domestic hot water. The DHW heat exchanger module ensures excellent performances even at a low flow rate of domestic hot water.
INSULATION
Buffer tank: high thermal insulation with ecological polyurethane hard foam.
Dhw module: insulating PST cover.
Grey PVC external lining.
WARRANTY
5 years (tank)
See general sales conditions and warranty for electrical parts.
ACCESSORIES AND SPARE PARTS
See Accessories section for the entire list.

NEW

IMMEDIATE D.H.W. PRODUCTION

cordivari.com/erp

On line ErP label tool

PUFFERMAS® 2 DOMUS

Model	HARD FOAM insulation Art. Nr.	HEAT EXCHANGER SURFACE [m²]	DHW module max/min flow rate [l/min]	ENERGY EFFICIENCY CLASS
200	3251162314782	1,20	2/40	**B**
300	3251162314783	1,40	2/40	**B**



- ***SUITABLE FOR ANY TYPE OF HEAT GENERATOR; IDEAL FOR HEAT PUMPS***
- ***HIGH EXCHANGE EFFICIENCY WITH HIGH ENERGY YIELD FOR DHW***
- ***OPTIMIZED INTERNAL STORAGE STRATIFICATION***
- ***MAXIMUM COMFORT WITH CONSTANT DHW TEMPERATURE AT ANY FLOW RATE***
- ***HIGH SENSIBLITY AND HIGH FLOW RATES (FROM 2 UP TO 40 LT/MIN)***
- ***MAXIMUM SAFETY AND ECONOMICITY***



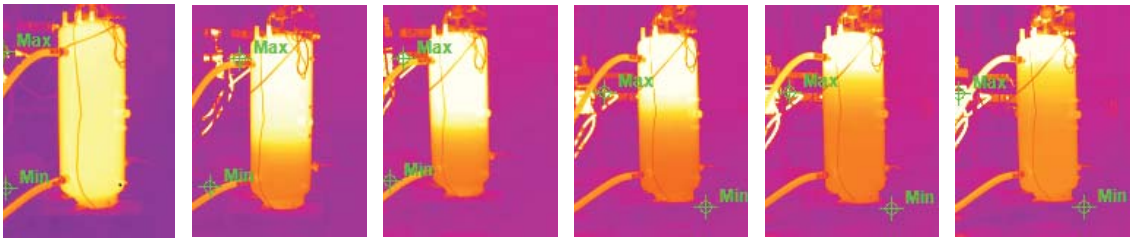

Series of thermographs that illustrate the perfect thermal stratification of the PUFFERMAS® DOMUS during the production of DHW through the integrated module

ACCESSORIES

MONOPHASE Electric immersion heaters



Available kit:	
[Kw]	Tension [V]
da **1,5** a **3**	220 - MONOPHASE
See accessories	

Thermometer

Art. Nr.
5032240000107
5 units box



Recirculationkit for PUFFERMAS® DOMUS

Art. Nr.
5221000000102
DHW circulation group



P.E.D. product designed and produced in conformity to the article 4.3 of directive 2014/68/UE - ErP Ecodesgin directive 2009/125/CE

PUFFERMAS® **2 DOMUS**

BUFFER TANK FOR HEAT PUMP WITH COMPACT DHW INSTANT PREPARATION UNIT AND 1 FIXED HEAT EXCHANGER

STORAGE		DHW EXCHANGE MODULE		FIXED HEAT EXCHANGER	
Pmax	Tmax	Pmax	Tmax	Pmax	Tmax
3 bar	99 °C	6 bar	99 °C	12 bar	110 °C

CORDIVARI Lab

TÜV Rheinland Energie und Umwelt GmbH states that test procedures and Cordivari LAB are certified conforming to European standard EN 15332, as indicated by Ecodesign ErP Directive.

TESTED ErP

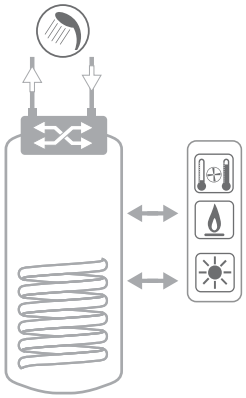

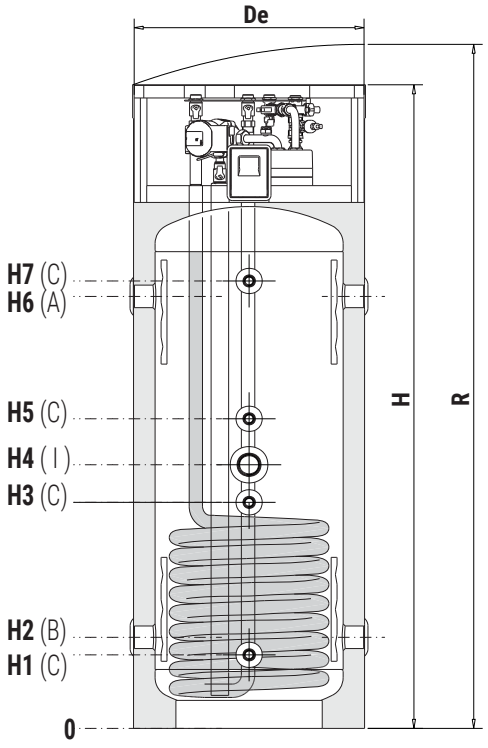

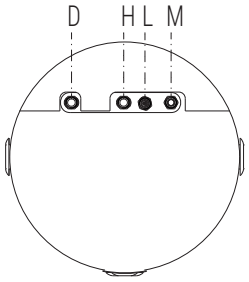

A	Heating delivery/from generator
B	Heating return/to generator
C	Probe
D	Fixed heat exchanger inlet
H	Fixed heat exchanger outlet
I	Connection for electric immersion heater
L	Domestic hot water outlet
M	Domestic cold water circuit inlet

Model	Volume	De	H	R	H1	H2	H3	H4	H5	H6	H7	A-B-I	C	D-H-L-M
	[lt]	[mm]										Connections F		
200	180	550	1539	1650	176	218	541	631	741	1034	1071	1"1/2	1/2"	3/4"
300	278	650	1580	1720	190	232	555	645	755	1048	1085	1"1/2	1/2"	3/4"

FLOW RATE PERFORMANCE OF DHW

The curves shown in these graphs allow to obtain the flow rate of domestic hot water (DHW) which can be produced by the integrated DHW production module, depending on the temperature of the storage tank / primary circuit (value on the horizontal axis).
The curves are parameterized based on the desired temperature of the DHW and indicate the maximum DHW flow rate that can be produced at that temperature (with inlet temperature at 10°C). The MACS Modules are able to produce all the DHW flow rates included in the area between the minimum activation flow rate and the maximum flow curve of each temperature.

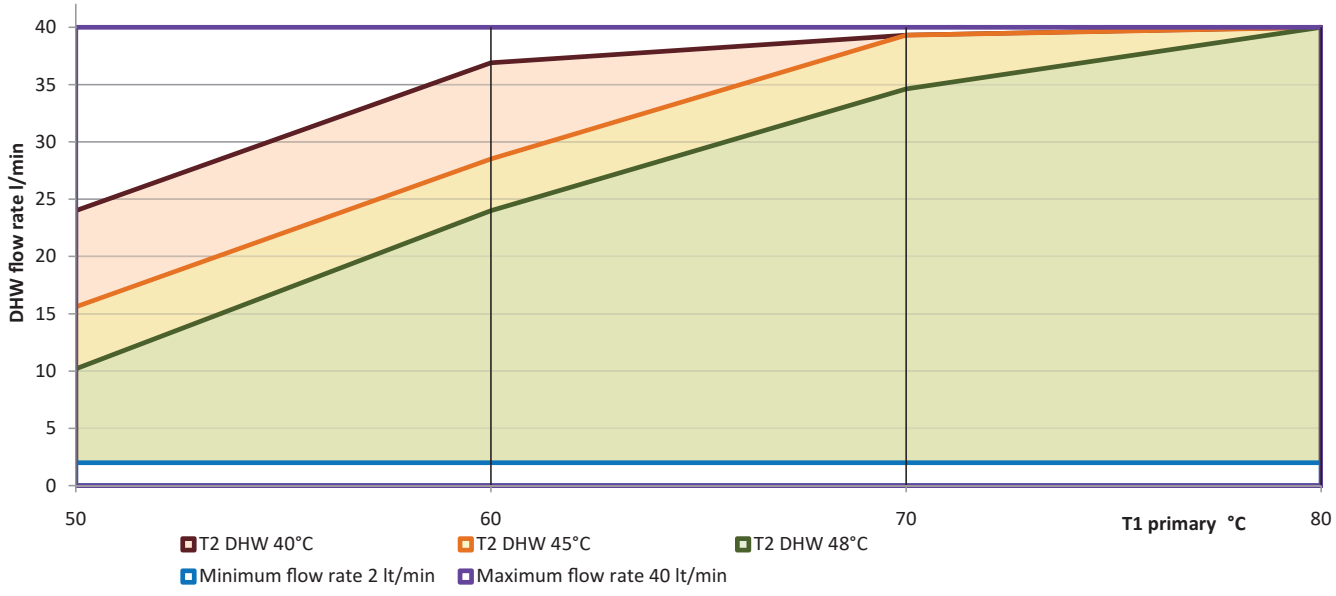

P.E.D. product designed and produced in conformity to the article 4.3 of directive 2014/68/UE - ErP Ecodesgin directive 2009/125/CE

PUFFERMAS® **2 DOMUS**

DHW PRODUCTION PERFORMANCE



DHW WITHDRAWAL 255 lt T > 40 °C **61% of the accumulated energy**

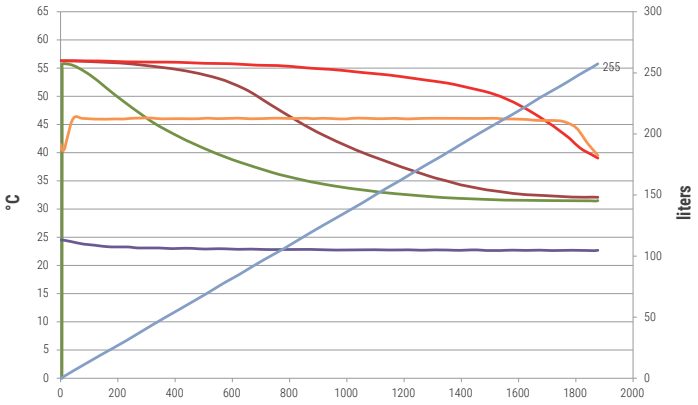

STORAGE: 55 °C
DRAWING: 45-39 °C
FLOW RATE: **8 l/min**

- TC1_Low accumulation
- TC2_Medium accumulation
- TC3_High accumulation
- TC4_sanitary water inlet
- TC5_DHW outlet
- total litres

PUFFERMAS® 2 DOMUS
Model 300



DHW WITHDRAWAL 255 lt T > 40 °C **58% of the accumulated energy**

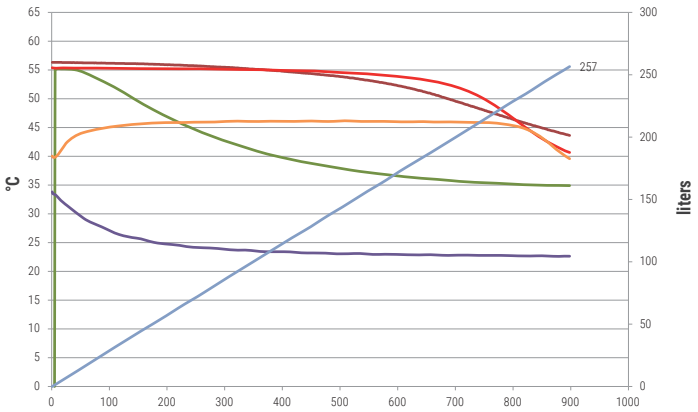

STORAGE: 55 °C
DRAWING: 45-39 °C
FLOW RATE: **16 l/min**

- TC1_Low accumulation
- TC2_Medium accumulation
- TC3_High accumulation
- TC4_sanitary water inlet
- TC5_DHW outlet
- total litres

PUFFERMAS® 2 DOMUS
Model 200



DHW WITHDRAWAL 179 lt T > 40 °C **60% of the accumulated energy**

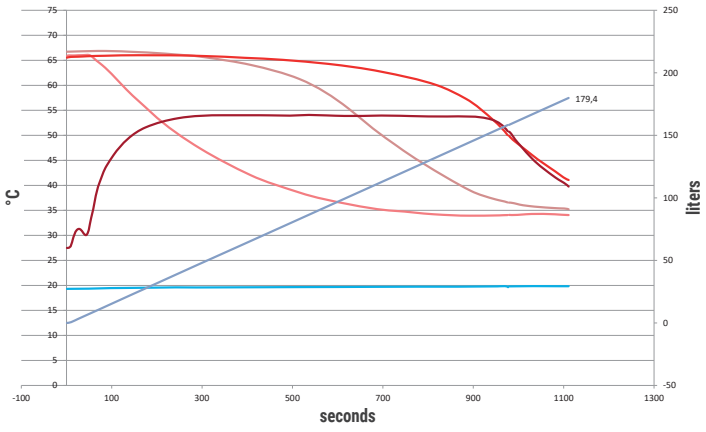

STORAGE: 65 °C
DRAWING: 55-40 °C
FLOW RATE: **10 l/min**

- TC1_Low accumulation
- TC2_Medium accumulation
- TC3_High accumulation
- TC4_sanitary water inlet
- TC5_DHW outlet
- total litres

DHW WITHDRAWAL 192 lt T > 40 °C **58% of the accumulated energy**

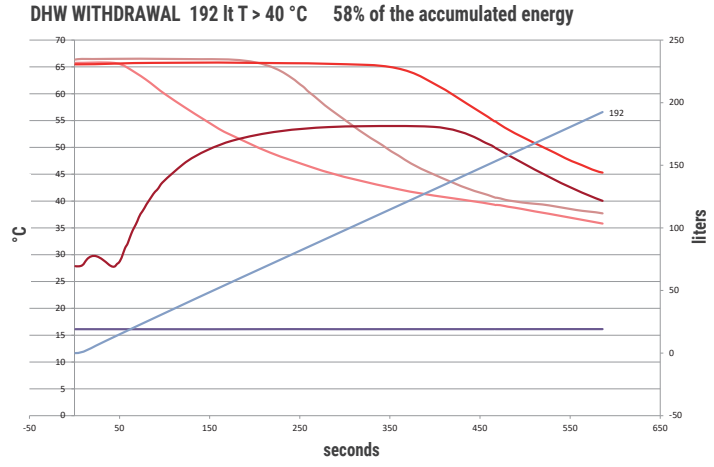

STORAGE: 65 °C
DRAWING: 55-40 °C
FLOW RATE: **20 l/min**

- TC1_Low accumulation
- TC2_Medium accumulation
- TC3_High accumulation
- TC4_sanitary water inlet
- TC5_DHW outlet
- total litres



EXAMPLE OF INSTALLATION WITH **PUFFERMAS® 1 DOMUS**

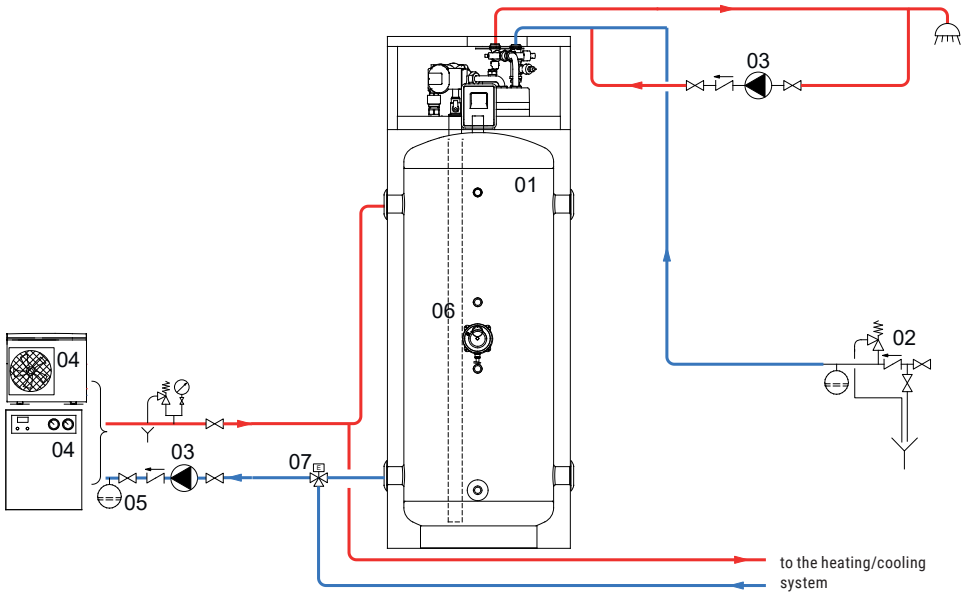

1	PUFFERMAS® 1 DOMUS	4	Generator	7	3-way valve
2	Hydraulic safety group	5	Expansion vessel		
3	Circulation group	6	Electric immersion heater (optional)		

EXAMPLE OF INSTALLATION WITH **PUFFERMAS® 2 DOMUS**

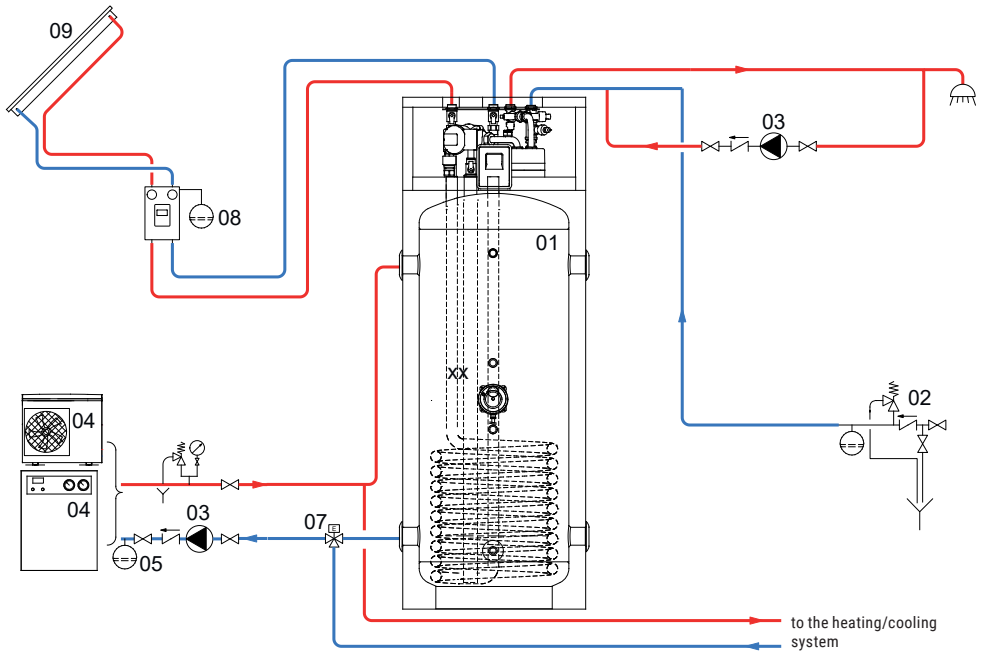

1	PUFFERMAS® 2 DOMUS	4	Generator	7	3-way valve
2	Hydraulic safety group	5	Expansion vessel	8	Solar system circulation group
3	Circulation group	6	Electric immersion heater (optional)	9	Solar panels

ECO COMBI **1 PDC**

MULTI-HEAT ENERGY BUFFER FOR HEAT PUMP WITH STAINLESS STEEL 316L DHW CORRUGATED COIL



APPLICATION
Heating hot water storage and D.H.W. production.
MATERIAL
- BUFFER TANK: mild steel construction with exterior paint. No anti-corrosion treatment required due to the buffer's closed circuit system.
- DHW STORAGE: Stainless steel 316L corrugated coil, suitable for D.H.W. according to D.M. n. 174 dated 06.04.04.

TECHNICAL DESCRIPTION
Designed for systems powered by heat pump heat source. ECO COMBI 1 PDC, at the typical temperatures of heat pumps, guarantees excellent DHW production thanks to the specially designed and dimensioned corrugated stainless steel 316L heat exchanger.

INSULATION
High thermal insulation with ecological polyurethane hard foam. Grey PVC external lining.
WARRANTY
5 years - See general sales conditions and warranty
ACCESSORIES AND SPARE PARTS
See Accessories section for the entire list.

316L STAINLESS STEEL DH.W. CORRUGATED COIL

cordivari.com/erp



On line ErP label tool



ECO COMBI 1 PDC VB

Model	HARD FOAM insulation	Heat pump max output	316L STAINLESS STEEL CORRUGATED COIL FOR D.H.W. PRODUCTION		ENERGY EFFICIENCY CLASS
	Art. Nr.	[kW]	Volume [lt]	Surface [m²]	ErP
300	3270162310002	26	26,6	4,5	**B**
500	3270162310003	26	31	5,3	**C**

Model	DISMOUNTABLE HARD FOAM insulation	Volume	Surface	ErP
	Art. Nr.	[kW]	[lt]	[m²]
800	3270162282267	35	45	7,7	**B**

ECO COMBI 1 PDC VC

Model	DISMOUNTABLE SOFT FLEECE insulation	Heat pump max output	316L STAINLESS STEEL CORRUGATED COIL FOR D.H.W. PRODUCTION		ENERGY EFFICIENCY CLASS
	Art. Nr.	[kW]	Volume [lt]	Surface [m²]	ErP
800	3270162282268	35	45	7,7	**B**

ACCESSORIES

Thermometer

Art. Nr.
5032240000107
5 units box



Recirculation kit

Art. Nr.
5221000000019
Attacco 3/4"



P.E.D. product designed and produced in conformity to the article 4.3 of directive 2014/68/UE - ErP Ecodesgin directive 2009/125/CE

ECO COMBI **1 PDC**

MULTI-HEAT ENERGY BUFFER FOR HEAT PUMP WITH STAINLESS STEEL 316L DHW CORRUGATED COIL

STORAGE		CORRUGATED DHW STAINLESS STEEL 316L COIL
Pmax	Tmax	Pmax
3 bar	99 °C	6 bar

CORDIVARI Lab

TÜV Rheinland Energie und Umwelt GmbH states that test procedures and Cordivari LAB are certified conforming to European standard EN 15332, as indicated by Ecodesign ErP Directive.

TESTED ErP

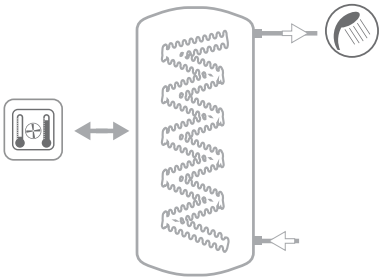

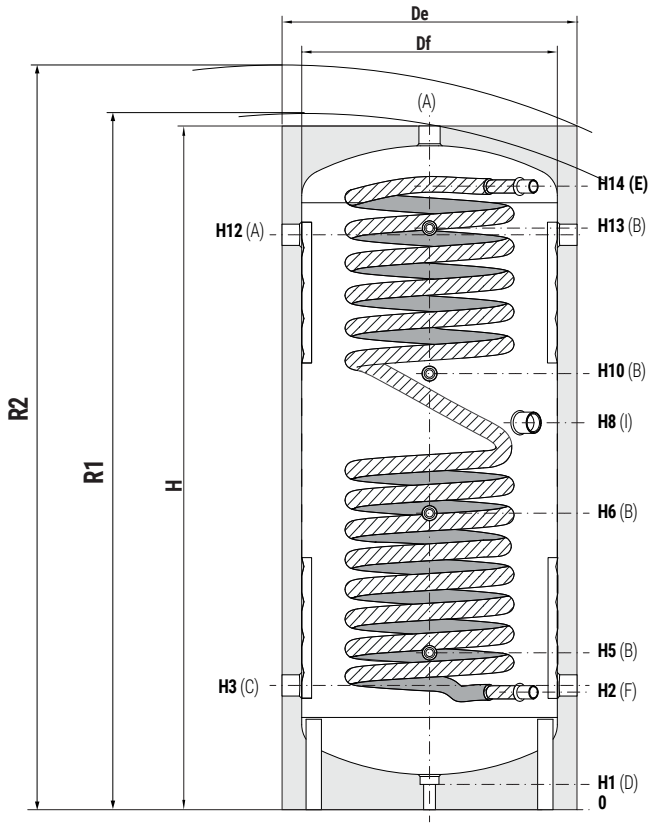

A	Heating delivery/from generator 1"1/2 F
B	Probe 1/2" F
C	Heating return/to generator 1"1/2 F
D	Drain 1"1/4 F
E	Domestic hot water circuit outlet
F	Domestic water inlet
I	Connection for electric immersion heater 1"1/2 F

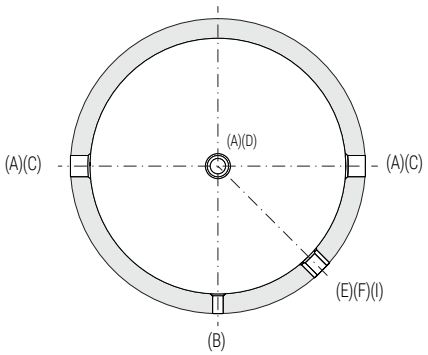

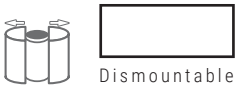

ECO COMBI 1 PDC VB - HARD FOAM INSULATION

Model	Vol.	Df	De	H	R1	R2	H1	H2	H3	H5	H6	H8	H10	H12	H13	H14	E-F
	[lt]	[mm]															Connections
300	291	-	650	1585	-	1713	70	297	330	390	745	970	1100	1280	1315	1415	1/2" F
500	454	-	750	1745	-	1899	70	305	322	405	760	990	1115	1468	1485	1585	1" M
800	748	790	940	1940	2030	2156	70	325	342	425	780	935	1135	1618	1635	1735	1" M

ECO COMBI 1 PDC VC - HARD FOAM INSULATION

Model	Vol.	De	Df	H	R1	R2	H1	H2	H3	H5	H6	H8	H10	H12	H13	H14	E-F
	[lt]	[mm]															Connections
800	748	1010	790	1940	2030	2190	70	325	342	425	780	935	1135	1618	1635	1735	1" M

P.E.D. product designed and produced in conformity to the article 4.3 of directive 2014/68/UE - ErP Ecodesgin directive 2009/125/CE

ECO COMBI **3 PDC**

MULTI-HEAT ENERGY BUFFER FOR HEAT PUMP WITH STAINLESS STEEL 316L DHW CORRUGATED COIL AND 2 FIXED HEAT EXCHANGERS



APPLICATION
Heating hot water storage and D.H.W. production.
MATERIAL
- BUFFER TANK: mild steel construction with exterior paint. No anti-corrosion treatment required due to the buffer's closed circuit system.
- DHW STORAGE: Stainless steel 316L corrugated coil, suitable for D.H.W. according to D.M. n. 174 dated 06.04.04.

HEAT EXCHANGERS
N° 2 mild steel fixed heat exchangers.
TECHNICAL DESCRIPTION
Designed for systems powered by heat pump heat source, with the possibility of integrating two additional heat generators (for example solar and boiler). ECO COMBI 3 PDC, at the typical temperatures of heat pumps, guarantees excellent DHW production thanks to the specially designed and dimensioned corrugated stainless steel 316L heat exchanger.

INSULATION
High thermal insulation with ecological polyurethane hard foam. Grey PVC external lining.
WARRANTY
5 years - See general sales conditions and warranty
ACCESSORIES AND SPARE PARTS
See Accessories section for the entire list.


316L STAINLESS STEEL DH.W. CORRUGATED COIL

cordivari.com/erp



On line ErP label tool



ECO COMBI 3 PDC VB

Model	HARD FOAM insulation	Heat pump max output	316L STAINLESS STEEL CORRUGATED COIL FOR D.H.W. PRODUCTION		UPPER HEAT EXCHANGER		LOWER HEAT EXCHANGER		ENERGY EFFICIENCY CLASS
			Volume	Surface	Volume	Surface	Volume	Surface	ErP
	Art. Nr.	[kW]	[lt]	[m²]	[lt]	[m²]	[lt]	[m²]	
300	3270162310202	26	26,6	4,5	4,4	0,7	7,9	1,2	**B**
500	3270162310203	26	31	5,3	7,7	1,2	14,5	2,2	**C**

Model	DISMOUNTABLE HARD FOAM insulation		Volume	Surface	Volume	Surface	Volume	Surface	ErP
	Art. Nr.	[kW]	[lt]	[m²]	[lt]	[m²]	[lt]	[m²]	
800	3270162282287	35	45	7,7	11,3	1,7	16,9	2,6	**B**

ECO COMBI 3 PDC VC

Model	DISMOUNTABLE SOFT FLEECE insulation	Heat pump max output	316L STAINLESS STEEL CORRUGATED COIL FOR D.H.W. PRODUCTION		UPPER HEAT EXCHANGER		LOWER HEAT EXCHANGER		ENERGY EFFICIENCY CLASS
			Volume	Surface	Volume	Surface	Volume	Surface	ErP
	Art. Nr.	[kW]	[lt]	[m²]	[lt]	[m²]	[lt]	[m²]	
800	3270162282288	35	45	7,7	11,3	1,7	16,9	2,6	**B**

ACCESSORIES

Thermometer

Art. Nr.
5032240000107
5 units box



Recirculation kit

Art. Nr.
5221000000019
Attacco 3/4"



P.E.D. product designed and produced in conformity to the article 4.3 of directive 2014/68/UE - ErP Ecodesgin directive 2009/125/CE

ECO COMBI **3 PDC**

MULTI-HEAT ENERGY BUFFER FOR HEAT PUMP WITH STAINLESS STEEL 316L DHW CORRUGATED COIL AND 2 FIXED HEAT EXCHANGERS

STORAGE		CORRUGATED DHW STAINLESS STEEL 316L COIL	FIXED HEAT EXCHANGER	
Pmax	Tmax	Pmax	Pmax	Tmax
3 bar	99 °C	6 bar	12 bar	110 °C

CORDIVARI Lab

TÜV Rheinland Energie und Umwelt GmbH states that test procedures and Cordivari LAB are certified conforming to European standard EN 15332, as indicated by Ecodesign ErP Directive.

TESTED ErP

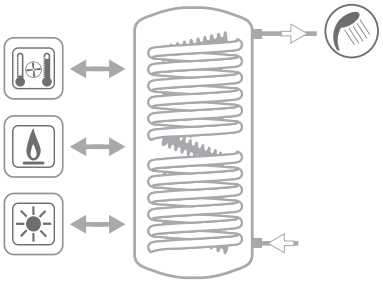

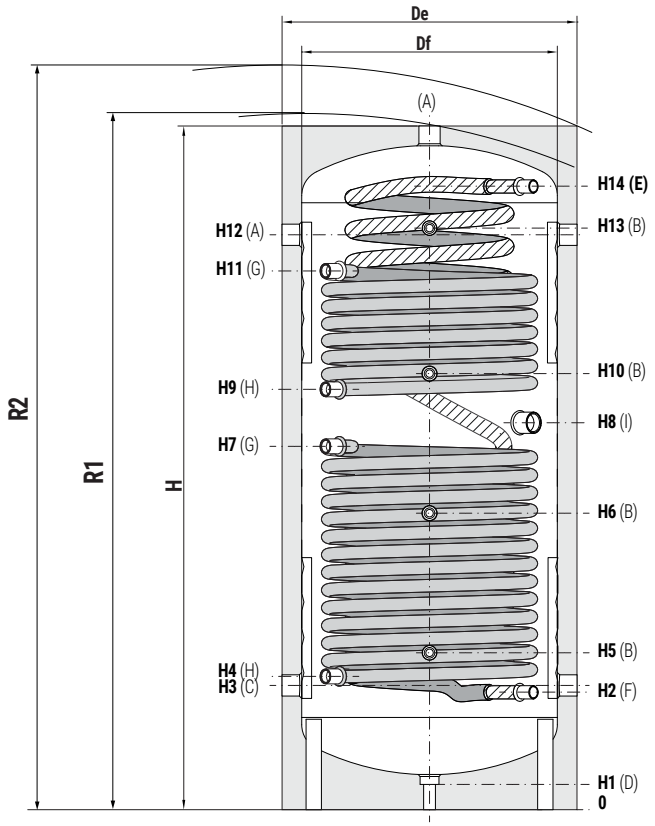

A	Heating delivery/from generator 1"1/2 F
B	Probe 1/2" F
C	Heating return/to generator 1"1/2 F
D	Drain 1"1/4 F
E	Domestic hot water circuit outlet
F	Domestic water inlet
G	Fixed heat exchanger inlet 1" F
H	Fixed heat exchanger outlet 1" F
I	Connection for electric immersion heater 1"1/2 F

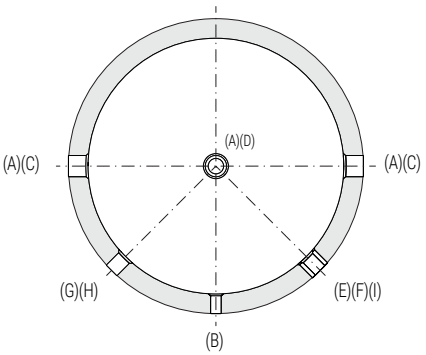

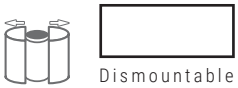

Dismountable insulation

ECO COMBI 3 PDC VB - HARD FOAM INSULATION

Model	Vol.	Df	De	H	R1	R2	H1	H2	H3	H4	H5	H6	H7	H8	H9	H10	H11	H12	H13	H14	E-F
	[lt]																				Connections
300	291	-	650	1585	-	1713	70	297	330	330	390	745	870	970	1040	1100	1280	1280	1315	1415	1/2" F
500	454	-	750	1745	-	1899	70	305	322	345	405	760	930	990	1075	1115	1376	1468	1485	1585	1" M
800	748	790	940	1940	2030	2156	70	325	342	365	425	780	905	935	1065	1135	1409	1618	1635	1735	1" M

ECO COMBI 3 PDC VB - HARD FOAM INSULATION

Model	Vol.	Df	De	H	R1	R2	H1	H2	H3	H4	H5	H6	H7	H8	H9	H10	H11	H12	H13	H14	E-F
	[lt]																				Connections
800	748	790	1010	1940	2030	2190	70	325	342	365	425	780	905	935	1065	1135	1409	1618	1635	1735	1" M

P.E.D. product designed and produced in conformity to the article 4.3 of directive 2014/68/UE - ErP Ecodesgin directive 2009/125/CE



EcoCombi PDC exchanged power according to average Delta T between primary and storage (flow rate of 3 m²/h circulating in the exchanger)

Exchangeable thermal powers are expressed both in kW and Kcal/h according to the average temperature difference between primary and secondary, having a primary flow rate of 3 m²/h.

UPPER HEAT EXCHANGER

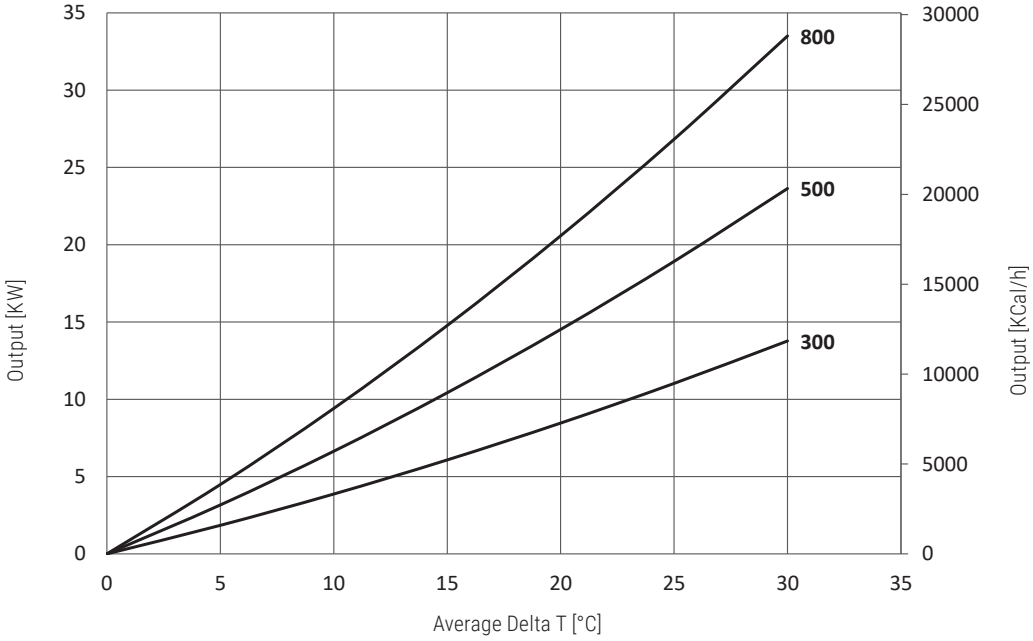

LOWER HEAT EXCHANGER

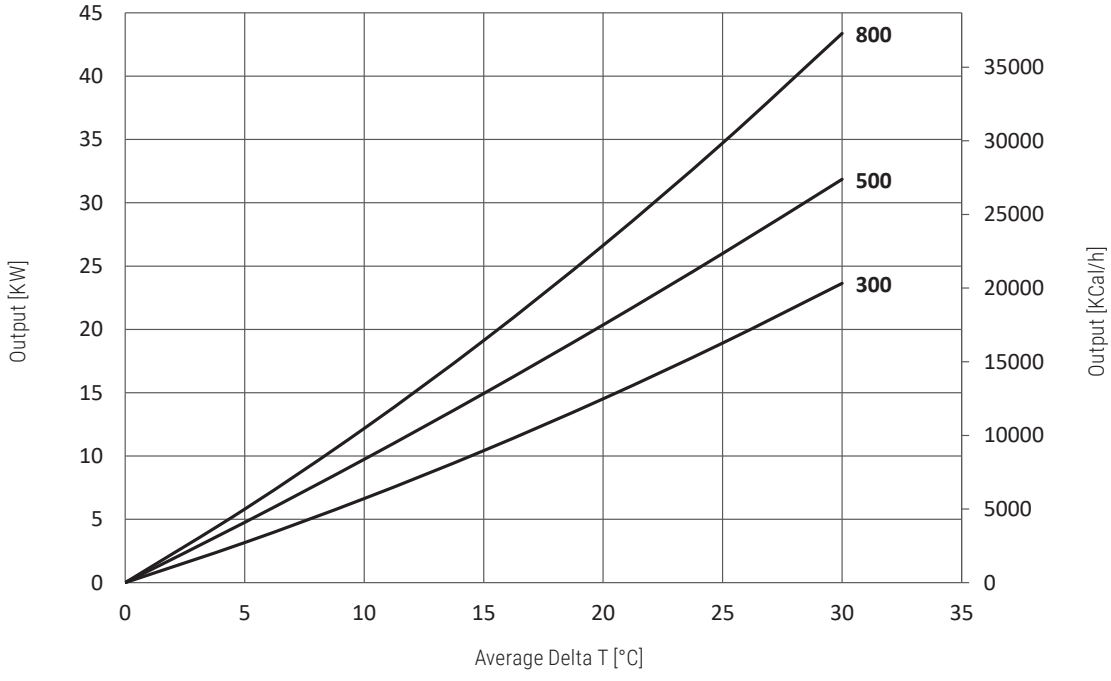

ECO COMBI **PDC**

HEAT EXCHANGERS PRESSURE LOSS



EcoCombi PDC exchanged power according to average Delta T between primary and storage (flow rate of 3 m²/h circulating in the exchanger)

UPPER HEAT EXCHANGER

Upper heat exchanger surface [m²]	
300	0,7
500	1,2
800	1,7

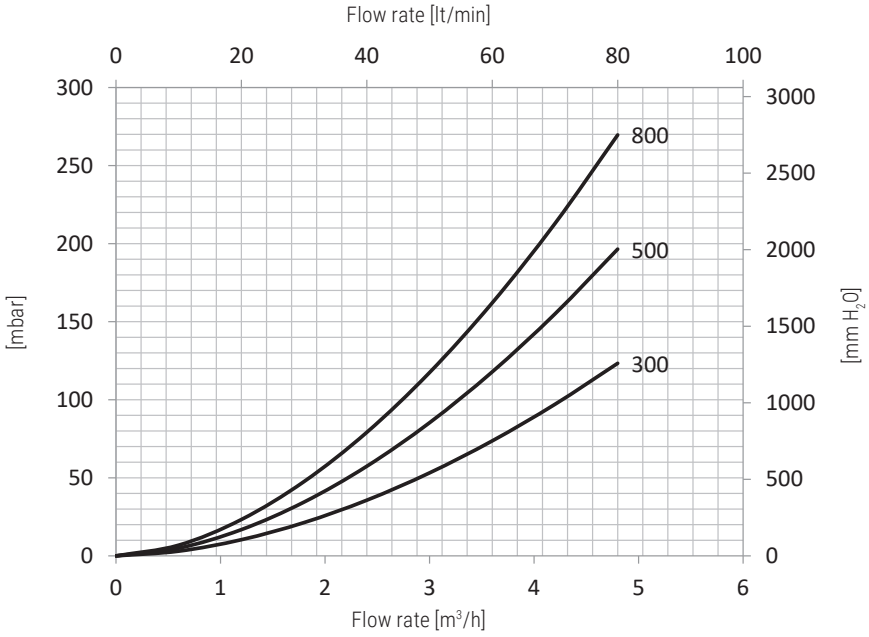

LOWER HEAT EXCHANGER

LOWER heat exchanger surface [m²]	
300	1,2
500	2,2
800	2,6

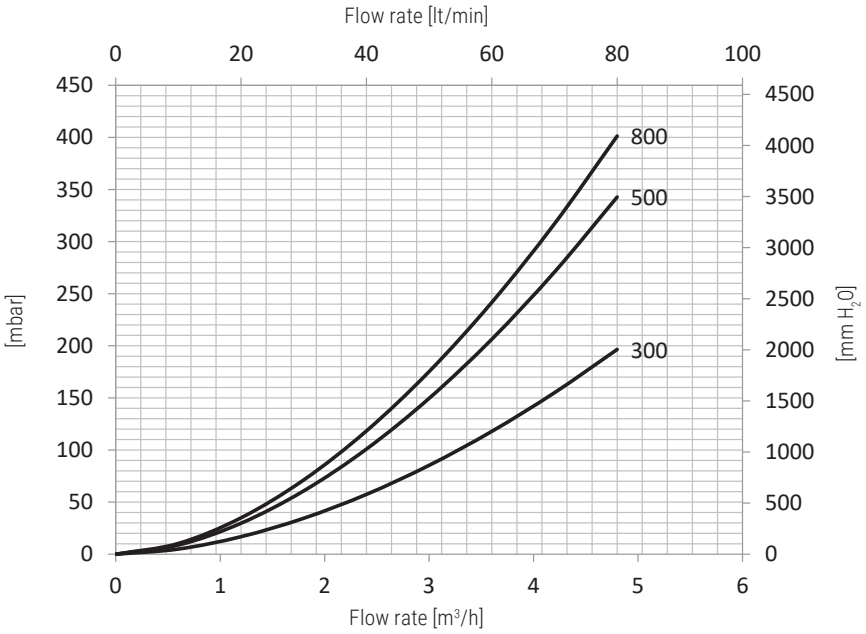



DHW IN LITERS, WHICH CAN BE WITHDRAWN STARTING FROM HOT ACCUMULATION AT THE TEMPERATURE AND FLOW RATES CONDITIONS INDICATED BELOW

Model	Buffer storage 55 °C - DHW 10/45°C			Buffer storage 55 °C - DHW 15/42°C		
	DHW withdrawal flow rate [lt/min]			DHW withdrawal flow rate [lt/min]		
	8	16	24	8	16	24
300	125	77	//	193	131	//
500	216	151	128	331	246	217
800	357	249	212	546	405	358

The relative charts of drawing refer to the model ECO COMBI 1 PDC - 300

STORAGE: 58 °C
DRAWING: 45-40 °C
FLOW RATE: **8 l/min**

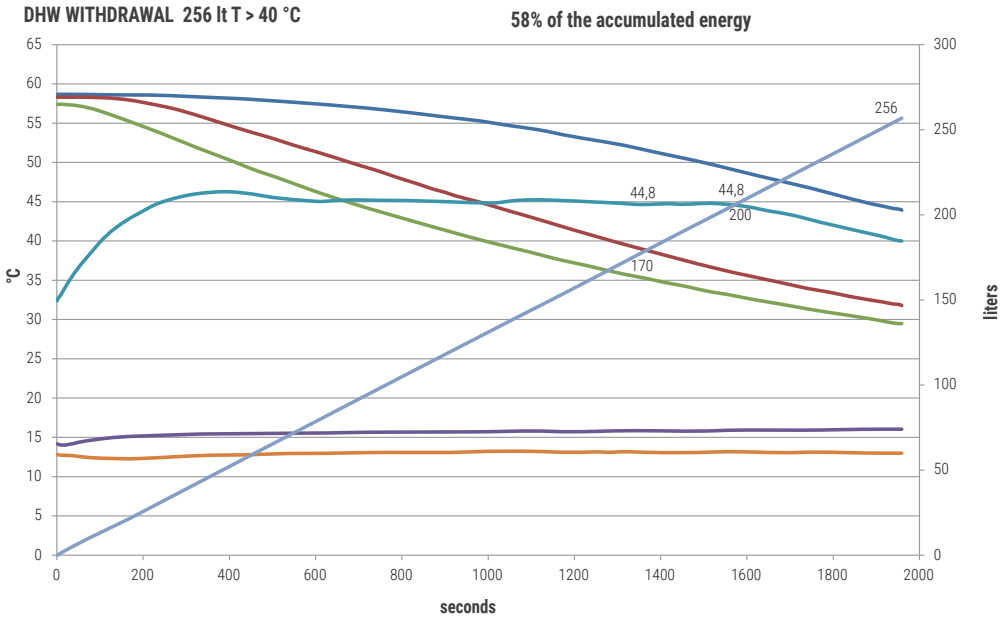

STORAGE: 57,5 °C
DRAWING: 45-40 °C
FLOW RATE: **16 l/min**

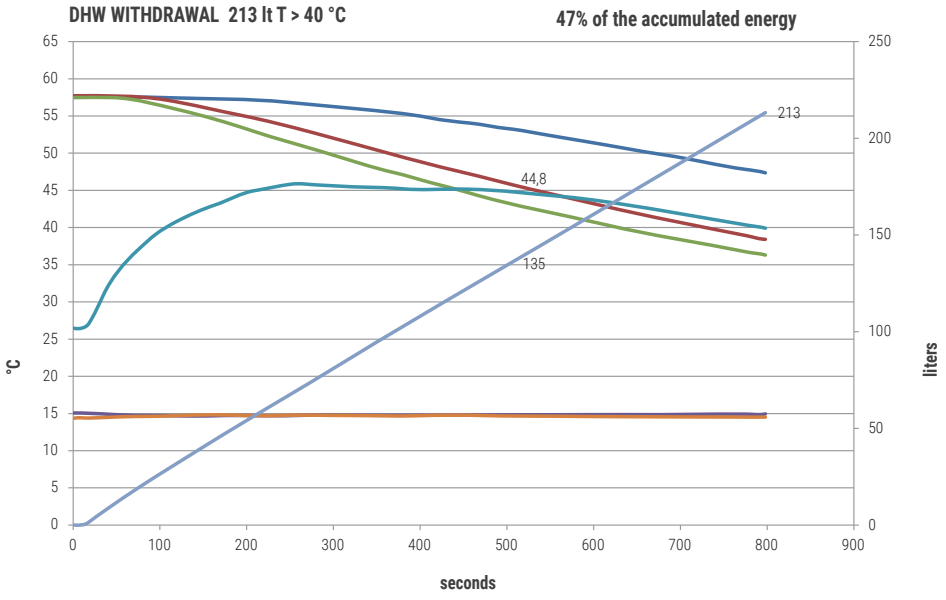



EXAMPLE OF INSTALLATION WITH **ECO-COMBI 1 PDC**

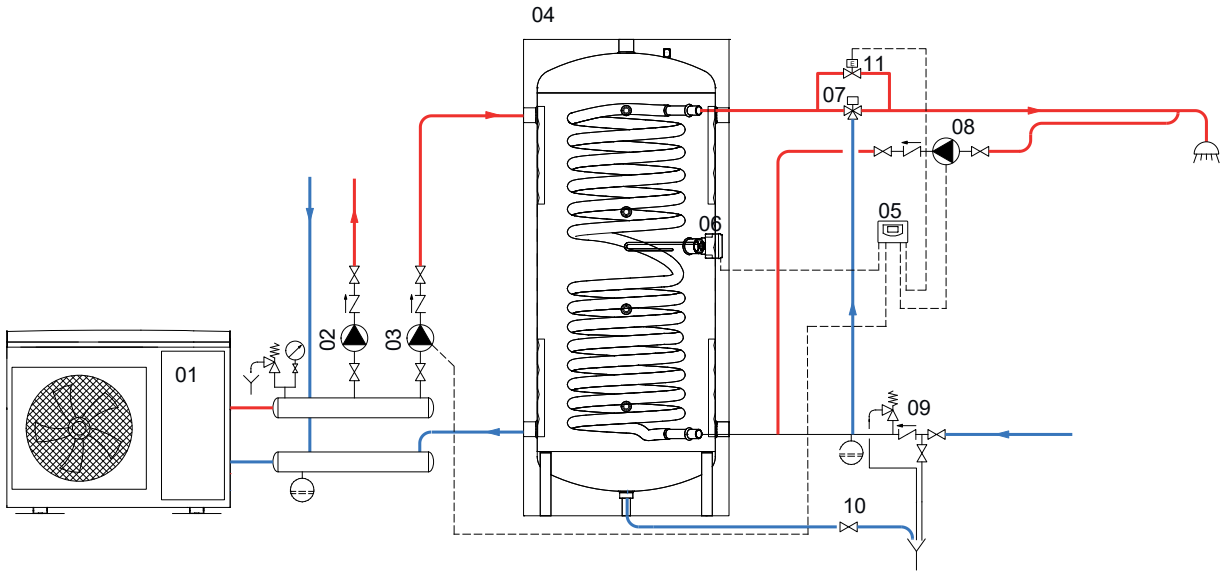

01	Generator (Heat pump)	04	Eco Combi 1 PDC	07	Thermostatic mixing valve	10	Blowdown valve
02	Heating system circulation group	05	Easy Control electronic display/ thermostat	08	D.H.W. recirculation group	11	By-pass solenoid valve
03	D.H.W. circulation group	06	Electric immersion heater (optional)	09	Hydraulic safety group		

EXAMPLE OF INSTALLATION WITH **ECO-COMBI 3 PDC**

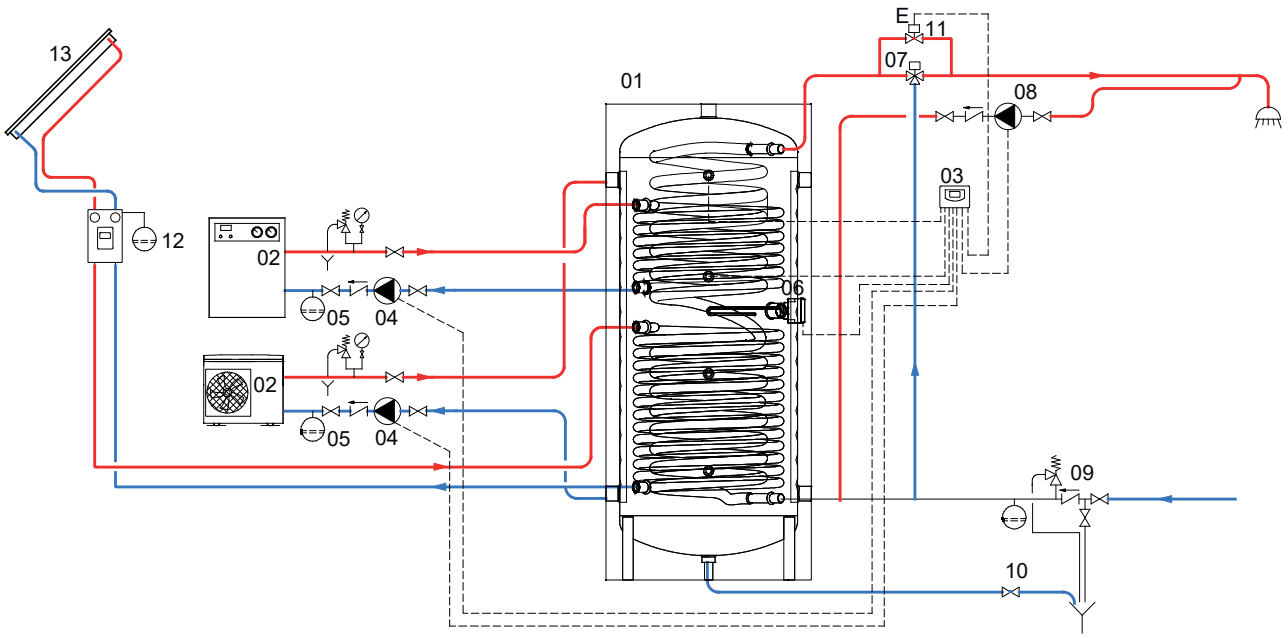

01	Eco Combi 3 PDC	05	Expansion vessel	09	Hydraulic safety group	13	Solar panels
02	Generator	06	Electric immersion heater (optional)	10	Blowdown valve		
03	Easy Control electronic display/ thermostat	07	Thermostatic mixing valve	11	By-pass solenoid valve		
04	Circulation group	08	D.H.W. recirculation group	12	Solar system circulation group		

BUFFER TANKS

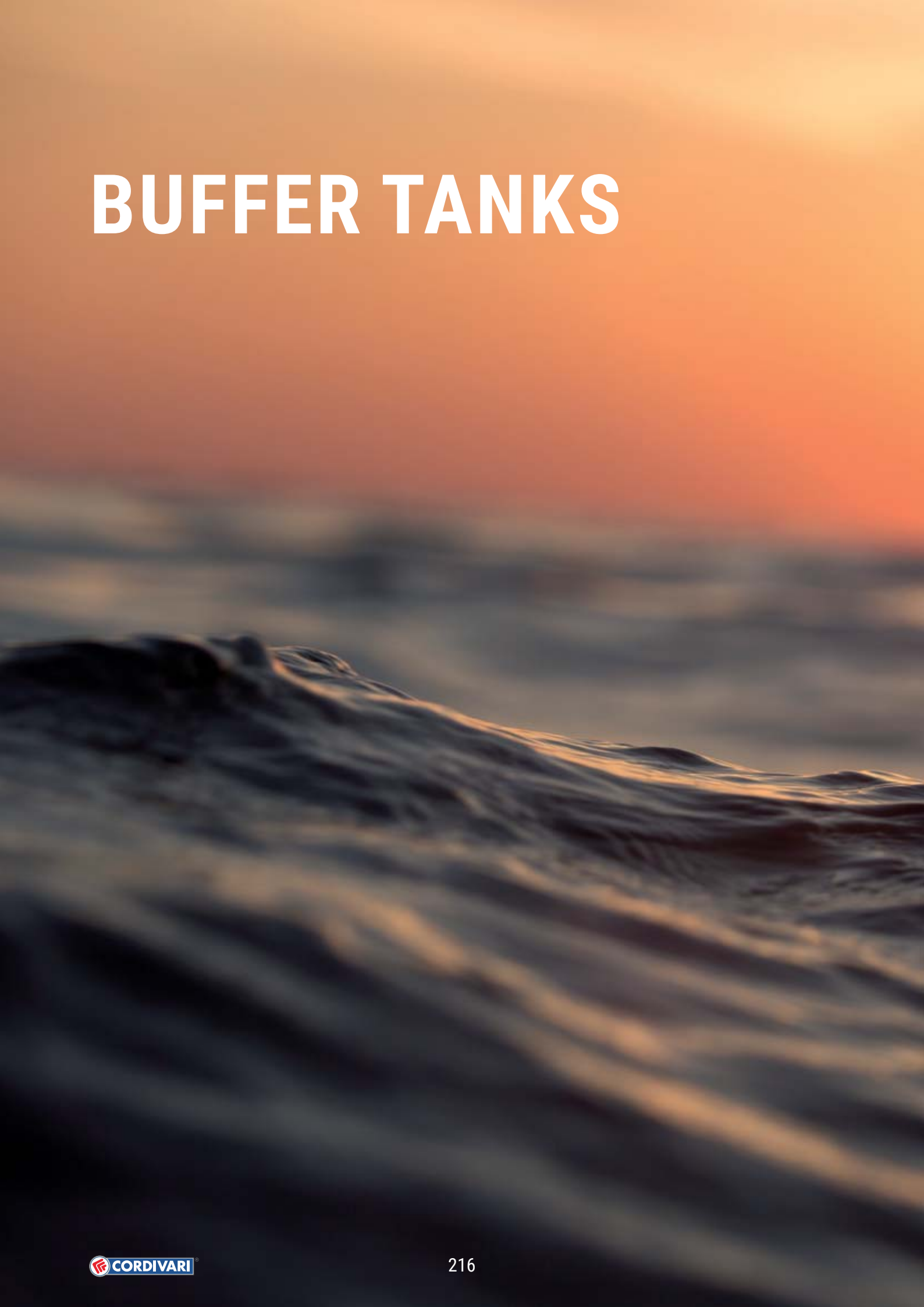



PUFFER
HEATING WATER BUFFER TANK



APPLICATION
Efficient storage of heating hot water mostly using biomass, heat pumps or solar thermal energy sources.
MATERIAL
Mild steel construction with exterior paint. No anti-corrosion treatment required due to the buffer's closed circuit system.
TECHNICAL DESCRIPTION
Used to improve flexibility of pellets, stoves and burners. PUFFER are used in units with a typically discontinuous energy source such as biomass boiler and solar thermal system.
Available models with 6 bar working pressure.

INSULATION
- HARD: High thermal insulation with ecological polyurethane hard foam.
- SOFT: NOFIRE® polyester fleece 100% made of recyclable material, with high thermal insulation. Fire resistance class B-s2d0 according to EN 13501.

Grey PVC external lining, complete with top and flange cover.
WARRANTY
5 years - See general sales conditions and warranty
ACCESSORIES AND SPARE PARTS
See Accessories section for the entire list.

STORAGE	
Pmax	Tmax
3 bar	99 °C

STOCK AVAILABILITY

cordivari.com/erp



On line ErP label tool



STORAGE	
Pmax	Tmax
6 bar	99 °C

PUFFER VB 6 BAR

Model	HARD FOAM insulation	ENERGY EFFICIENCY CLASS
	Art. Nr.	ErP
500	3251162312531	**C**

PUFFER VC 6 BAR

Model	DISMOUNTABLE SOFT FLEECE insulation	ENERGY EFFICIENCY CLASS
	Art. Nr.	ErP
800	3251162282611	**C**
1000	3251162282612	**C**
1500	3251162282613	**C**
2000	3251162282614	**C**
3000	3251162282615	
5000	3251162282616	

PUFFER VB

Model	HARD FOAM insulation	ENERGY EFFICIENCY CLASS
	Art. Nr.	ErP
200	3251162312501	**B**
300	3251162312502	**B**
500	3251162312503	**C**
600	3251162312504	**C**
750	3251162312525	**B**
800	3251162312526	**B**
1000	3251162312527	**C**
1250	3251162312508	**B**
1500	3251162312509	**C**
2000	3251162312510	**B**

PUFFER VB

Model	DISMOUNTABLE HARD FOAM insulation	ENERGY EFFICIENCY CLASS
	Art. Nr.	ErP
750	3251162312505	**B**
800	3251162312506	**B**
1000	3251162312507	**C**

PUFFER VC

Model	DISMOUNTABLE SOFT FLEECE insulation	ENERGY EFFICIENCY CLASS
	Art. Nr.	ErP
750	3251162282804	**C**
800	3251162282805	**C**
1000	3251162282806	**C**
1500	3251162282807	**C**
2000	3251162282808	**C**
3000	3251162282608	
5000	3251162282610	

ACCESSORIES

Thermometer

Art. Nr.
5032240000107
5 units box



Buffer tanks connecting kit

Art. Nr.	Connection
5006170001001	1" 1/2
Stainless steel extensible connecting kit - (200 ÷ 400 mm)	



P.E.D. product designed and produced in conformity to the article 4.3 of directive 2014/68/UE - ErP Ecodesgin directive 2009/125/CE

PUFFER

HEATING WATER BUFFER TANK

STORAGE	
Pmax	Tmax
3 bar	99 °C

STORAGE	
Pmax	Tmax
6 bar	99 °C

CORDIVARI Lab

TÜV Rheinland Energie und Umwelt GmbH states that test procedures and Cordivari LAB are certified conforming to European standard EN 15332, as indicated by Ecodesign ErP Directive.

TESTED ErP

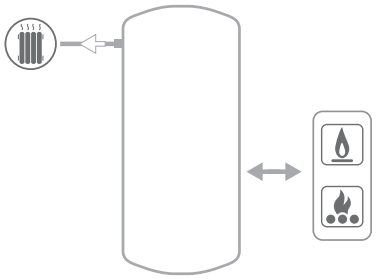

See TECHNICAL SUPPORT chapter for example of installation

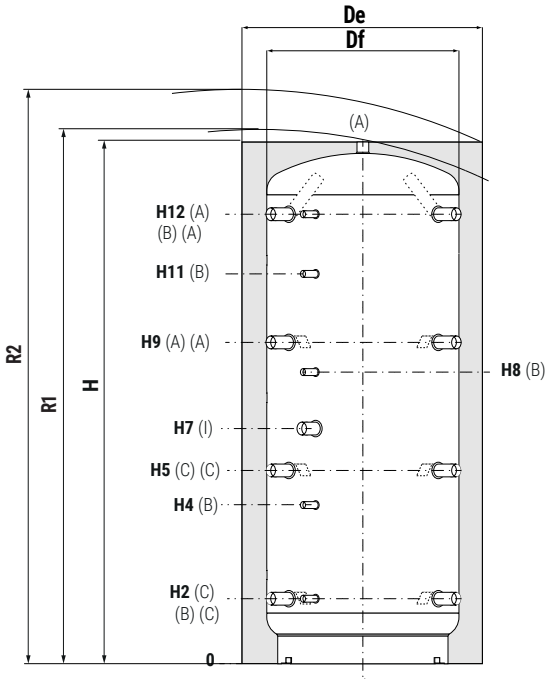

A	Heating delivery/from generator
B	Connection for instrumentation 1/2" F
C	Heating return/to generator
I	Connection for electric immersion heater
O	Drain only for models 3000 and 5000

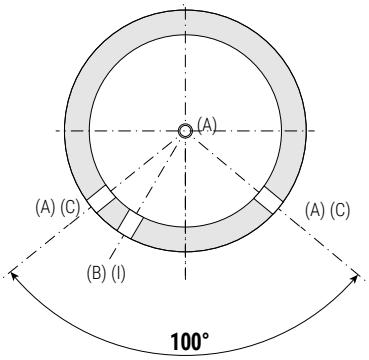

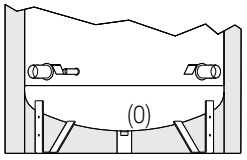

Only for models 3000 - 5000

Model	Volume	Df (vers. VC)	De (vers. VC)	De (vers. VB)	H	R1	R2	H2	H4
	[lt]	[mm]				[mm]			
200	180	//	//	550	1299	//	1415	218	430
300	279	//	//	650	1340	//	1495	232	444
500	478	//	//	750	1620	//	1790	247	533
600	560	//	//	750	1870	//	2020	247	582
750	717	790	1010	950	1658	1710	1915	265	584
800	805	790	1010	950	1840	1890	2075	265	584
1000	946	790	1010	950	2130	2175	2340	265	656
1250	1248	//	//	1050	2201	//	2445	313	705
1500	1454	950	1210	1100	2250	2305	2510	313	736
2000	1973	1100	1360	1300	2320	2390	2665	347	770
3000	2915	1250	1450	//	2814	2890	3170	556	1017
5000	4985	1600	1800	//	2929	3045	3445	586	1047

Model	H5	H7	H8	H9	H11	H12	A - C - I	O
	[mm]						Connections F	
200	500	576	711	782	871	1064	1"1/2	//
300	514	590	725	796	885	1078	1"1/2	//
500	629	841	930	1011	1231	1343	1"1/2	//
600	695	915	1060	1144	1382	1593	1"1/2	//
750	630	823	938	995	1180	1371	1"1/2	//
800	690	823	988	1115	1332	1541	1"1/2	//
1000	787	998	1188	1309	1588	1831	1"1/2	//
1250	835	986	1168	1357	1568	1879	1"1/2	//
1500	845	1061	1286	1377	1653	1909	1"1/2	//
2000	879	1060	1300	1411	1687	1943	1"1/2	//
3000	1071	1693	1879	1786	2140	2402	2"	1"
5000	1101	1691	1889	1816	2159	2432	2"	2"

P.E.D. product designed and produced in conformity to the article 4.3 of directive 2014/68/UE - ErP Ecodesgin directive 2009/125/CE

PUFFER **COMPACT**

HEATING WATER BUFFER TANK SUITABLE FOR LOW-CEILINGED ROOMS



APPLICATION
Efficient storage of heating hot water mostly using biomass, heat pumps or solar thermal energy sources.
MATERIAL
Mild steel construction with exterior paint. No anti-corrosion treatment required due to the buffer's closed circuit system.
TECHNICAL DESCRIPTION
Used to improve flexibility of pellets, stoves and burners. PUFFER COMPACT are used in units with a typically discontinuous energy source such as biomass boiler and solar thermal system.
Suitable for low-ceilinged rooms.

INSULATION
NOFIRE® polyester fleece 100% made of recyclable material, with high thermal insulation. Fire resistance class B-s2d0 according to EN 13501.
Grey PVC external lining.
WARRANTY
5 years - See general sales conditions and warranty
ACCESSORIES AND SPARE PARTS
See Accessories section for the entire list.

STOCK AVAILABILITY

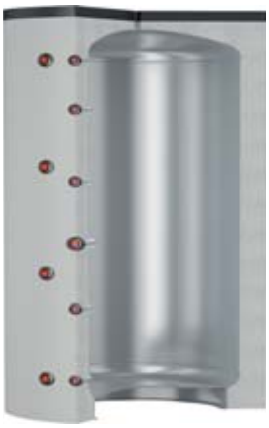

cordivari.com/erp



On line ErP label tool



PUFFER COMPACT VC

Model	DISMOUNTABLE SOFT FLEECE insulation
	Art. Nr.
2500	3251162280370
3000	3251162282658
4000	3251162282659
4500	3251162282660
5000	3251162282661
6000	3251162282662
8000	3251162282663

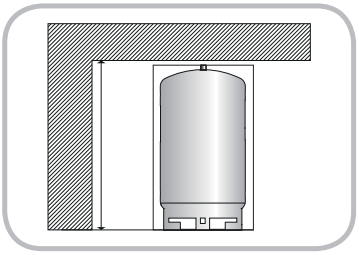

SUITABLE FOR LOW-CEILINGED ROOMS



EASY TO TRANSPORT

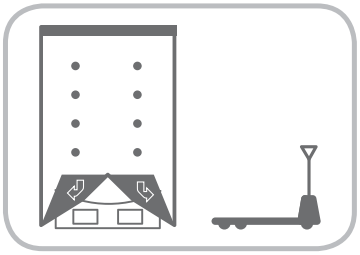

EASY TO MOVE

ACCESSORIES

Thermometer

Art. Nr.
5032240000107
5 units box



P.E.D. product designed and produced in conformity to the article 4.3 of directive 2014/68/UE - ErP Ecodesgin directive 2009/125/CE

PUFFER **COMPACT**

HEATING WATER BUFFER TANK SUITABLE FOR LOW-CEILINGED ROOMS

STORAGE	
Pmax	Tmax
3 bar	99 °C

CORDIVARI Lab

TÜV Rheinland Energie und Umwelt GmbH states that test procedures and Cordivari LAB are certified conforming to European standard EN 15332, as indicated by Ecodesign ErP Directive.

TESTED ErP

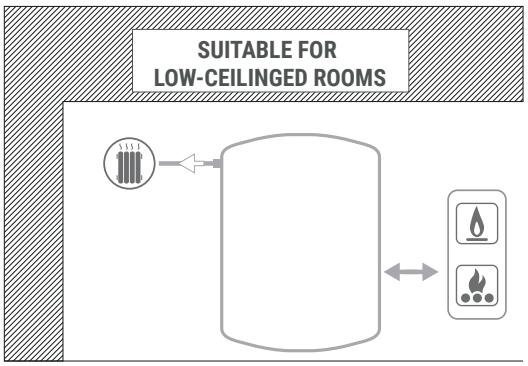

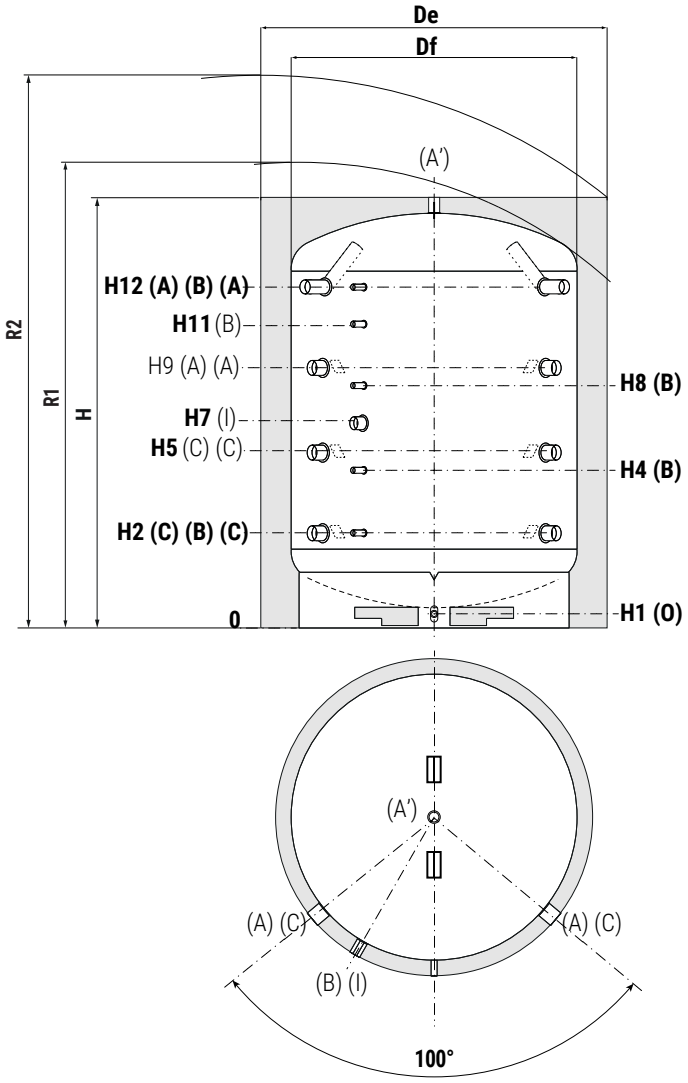

A'	Heating delivery
A	Heating delivery/from generator
B	Connection for instrumentation 1/2" F
C	Heating return/to generator
I	Connection for electric immersion heater
O	Drain only for models > 2500

Model	Volume	Df	De	H	R1	R2	H1	H2	H4
	[lt]	[mm]							
2500	2306	1250	1450	2351	2465	2770	140	556	886
3000	3017	1500	1700	2180	2372	2770	109,5	567	841
4000	3986	1600	1800	2456	2643	3050	94,5	574	910
4500	4411	1800	2000	2230	2565	3000	90	582	856
5000	5042	1800	2000	2480	2758	3190	90	583	919
6000	5672	1800	2000	2730	2960	3390	90	605	1005
8000	7564	1800	2000	3480	3650	4020	90	606	1066

Model	H5	H7	H8	H9	H11	H12	A - C	A' - I	O
	[mm]						Connections F		
2500	996	1051	1216	1436	1546	1876	1"1/2	1"1/2	-
3000	932	1252	1115	1297	1389	1662	2"	2"	1"
4000	1022	1414	1246	1470	1582	1918	2"	2"	1"
4500	947	1267	1130	1312	1404	1677	2"	2"	1"
5000	1031	1423	1255	1479	1591	1927	2"	2"	1"
6000	1114	1295	1535	1646	1922	2155	3"	2"	1"
8000	1372	1526	1986	2138	2446	2904	3"	2"	1"

P.E.D. product designed and produced in conformity to the article 4.3 of directive 2014/68/UE - ErP Ecodesgin directive 2009/125/CE

PUFFER **FLANGIATI**

HEATING WATER BUFFER TANKS WITH 90° AND 180° FLANGED CONNECTIONS



APPLICATION
Efficient storage of heating hot water mostly using biomass, heat pumps or solar thermal energy sources.
MATERIAL
Mild steel construction with exterior paint. No anti-corrosion treatment required due to the buffer's closed circuit system.
TECHNICAL DESCRIPTION
Used to improve flexibility of pellets, stoves and burners. PUFFER FLANGED are used in units with a typically discontinuous energy source such as biomass boiler and solar thermal system.
PUFFER FLANGED have been conceived for medium/large biomass heating plants where flanged connections are required.
PUFFER FLANGED have reduced height for maximum installation flexibility.

INSULATION
NOFIRE® polyester fleece 100% made of recyclable material, with high thermal insulation. Fire resistance class B-s2d0 according to EN 13501. Grey PVC external lining.
WARRANTY
5 years - See general sales conditions and warranty
ACCESSORIES AND SPARE PARTS
See Accessories section for the entire list.

cordivari.com/erp



On line ErP label tool



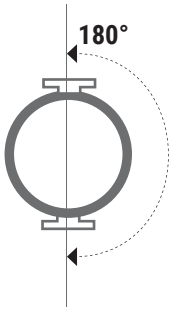

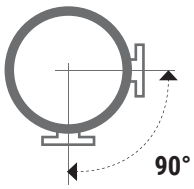



PUFFER FLANGIATI VC (180°)

Model	DISMOUNTABLE SOFT FLEECE insulation
	Art. Nr.
2500	3251162282680
3000	3251162282681
4000	3251162282682
4500	3251162282683
5000	3251162282684
6000	3251162282685
8000	3251162282686
10000	3251162282620
12000	3251162282621
20000	3251162282697



PUFFER FLANGIATI VC (90°)

Model	DISMOUNTABLE SOFT FLEECE insulation
	Art. Nr.
2500	3251162282690
3000	3251162282691
4000	3251162282692
4500	3251162282693
5000	3251162282694
6000	3251162282695
8000	3251162282696
10000	3251162282622
12000	3251162282623
20000	3251162282698

ACCESSORIES

Thermometer

Art. Nr.
5032240000107
5 units box



P.E.D. product designed and produced in conformity to the article 4.3 of directive 2014/68/UE - ErP Ecodesgin directive 2009/125/CE

PUFFER **FLANGIATI**

HEATING WATER BUFFER TANKS WITH 90° AND 180° FLANGED CONNECTIONS

STORAGE	
Pmax	Tmax
3 bar	99 °C

CORDIVARI Lab

TÜV Rheinland Energie und Umwelt GmbH states that test procedures and Cordivari LAB are certified conforming to European standard EN 15332, as indicated by Ecodesign ErP Directive.

TESTED ErP

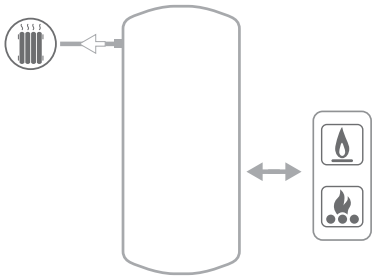



180° flanged connections

A'	Heating delivery
A	Heating delivery/from generator
B	Connection for instrumentation 1/2" F
C	Heating return/to generator
I	Connection for electric immersion heater
O	Drain



90° flanged connections

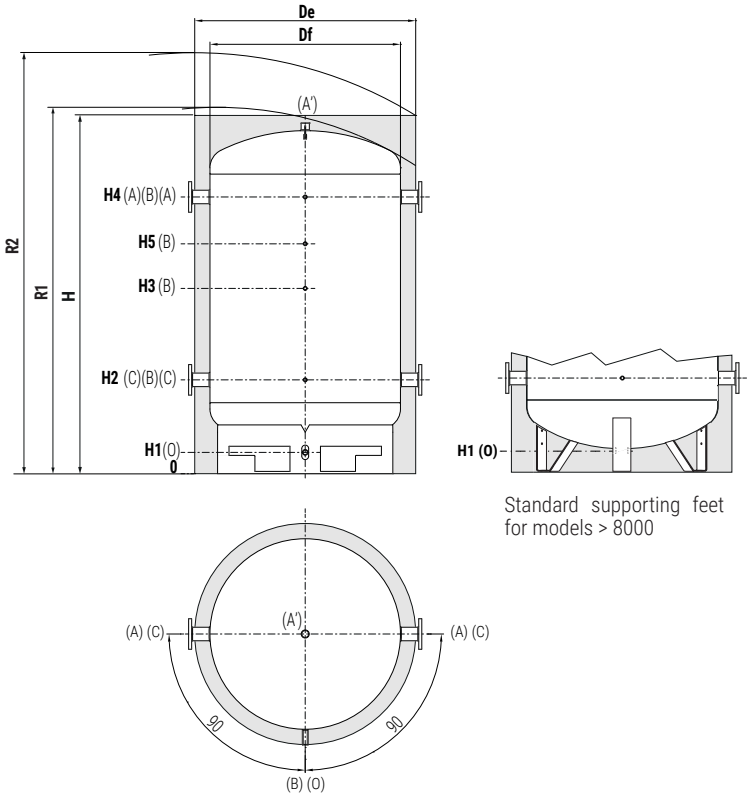

Standard supporting feet for models > 8000

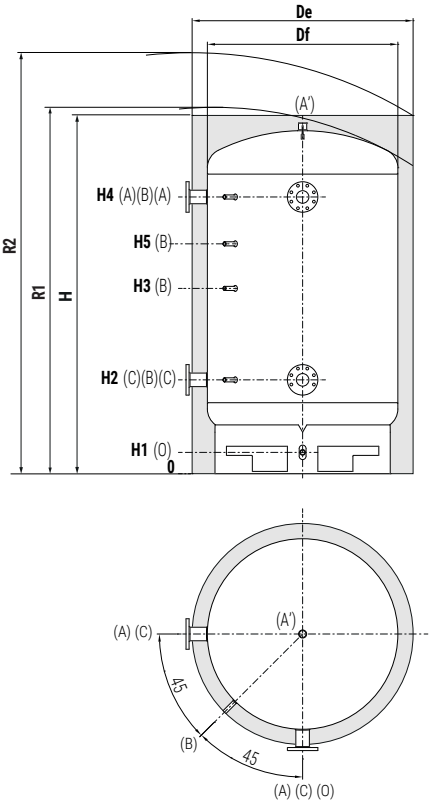

Model	Volume	Df	De	H	R1	R2	H1	H2	H3	H4	H5	A - C	A'	O
	[lt]	[mm]										Connections F		
2500	2306	1250	1450	2351	2460	2770	140	616	1216	1816	//	PN16 DN80	1"1/2	1"
3000	3017	1500	1700	2180	2375	2770	109	640	1115	1590	//	PN16 DN80	2"	1"
4000	3986	1600	1800	2456	2655	3050	95	646	1246	1846	//	PN16 DN80	2"	1"
4500	4411	1800	2000	2230	2560	3000	89	655	1130	1605	//	PN16 DN80	2"	1"
5000	5042	1800	2000	2480	2755	3190	89	675	1255	1835	//	PN16 DN100	2"	1"
6000	5672	1800	2000	2730	2985	3390	89	675	1380	2085	//	PN16 DN100	2"	1"
8000	7564	1800	2000	3480	3665	4020	89	675	1705	2835	//	PN16 DN100	2"	1"
10000	10455	2200	2200	3916	4180	4500	191	826	1636	3256	2446	PN16 DN100	2"	2"
12000	12010	2200	2200	4461	4650	4980	191	826	1803	3756	2779	PN16 DN100	2"	2"
20000	19984	2400	2600	5060	5240	5695	140	840	1990	3140	4290	PN16 DN100	2"	2"

P.E.D. product designed and produced in conformity to the article 4.3 of directive 2014/68/UE - ErP Ecodesgin directive 2009/125/CE

PUFFER 1

HEATING WATER BUFFER TANK WITH 1 FIXED HEAT EXCHANGER



APPLICATION
Efficient storage of heating hot water mostly using biomass, heat pumps or solar thermal energy sources.
MATERIAL
Mild steel construction with exterior paint. No anti-corrosion treatment required due to the buffer's closed circuit system.
HEAT EXCHANGER
N° 1 mild steel fixed heat exchanger.
TECHNICAL DESCRIPTION
Used to improve flexibility of pellets, stoves and burners. PUFFER 1 are used in units with a typically discontinuous energy source such as biomass boiler and solar thermal system.
PUFFER 1 allows the solar energy system integration.

INSULATION
- HARD: High thermal insulation with ecological polyurethane hard foam.
- SOFT: NOFIRE® polyester fleece 100% made of recyclable material, with high thermal insulation. Fire resistance class B-s2d0 according to EN 13501.

Grey PVC external lining, complete with top and flange cover..
WARRANTY
5 years - See general sales conditions and warranty
ACCESSORIES AND SPARE PARTS
See Accessories section for the entire list.

STOCK AVAILABILITY



cordivari.com/erp



On line ErP label tool



PUFFER 1 VB

Model	HARD FOAM insulation Art. Nr.	Heat exchanger surface [m²]	Energy efficiency class ErP
300	3251162312201	1,0	**B**
500	3251162312202	1,9	**C**
600	3251162312203	2,1	**C**
750	3251162312214	2,3	**B**
800	3251162312215	2,5	**B**
1000	3251162312216	3,1	**C**
1250	3251162312207	3,4	**B**
1500	3251162312208	3,8	**C**
2000	3251162312209	4,6	**B**



PUFFER 1 VB

Model	DISMOUNTABLE HARD FOAM insulation Art. Nr.	Heat exchanger surface [m²]	Energy efficiency class ErP
750	3251162312204	2,3	**B**
800	3251162312205	2,5	**B**
1000	3251162312206	3,1	**C**



PUFFER 1 VC

Model	DISMOUNTABLE SOFT FLEECE insulation Art. Nr.	Heat exchanger surface [m²]	Energy efficiency class ErP
750	3251162282814	2,3	**C**
800	3251162282815	2,5	**C**
1000	3251162282816	3,1	**C**
1500	3251162282817	3,8	**C**
2000	3251162282818	4,6	**C**
3000	3251162282308	6,2	
5000	3251162282309	7,5	

ACCESSORIES

THREEPHASE and MONOPHASE Electric immersion heaters



Available kit:	
[Kw]	Tension [V]
da **1,5** a **3**	220 - MONOPHASE
da **4** a **12**	400 - THREEPHASE
See accessories	

Thermometer

Art. Nr.
5032240000107
5 units box



Buffer tanks connecting kit

Art. Nr.	Connection
5006170001001	1" 1/2
Stainless steel extensible connecting kit - (200 ÷ 400 mm)	



P.E.D. product designed and produced in conformity to the article 4.3 of directive 2014/68/UE - ErP Ecodesgin directive 2009/125/CE

PUFFER **1**

HEATING WATER BUFFER TANK WITH 1 FIXED HEAT EXCHANGER

STORAGE		HEAT EXCHANGER	
Pmax	Tmax	Pmax	Tmax
3 bar	99 °C	12 bar	110 °C

CORDIVARI Lab

TÜV Rheinland Energie und Umwelt GmbH states that test procedures and Cordivari LAB are certified conforming to European standard EN 15332, as indicated by Ecodesign ErP Directive.

TESTED ErP

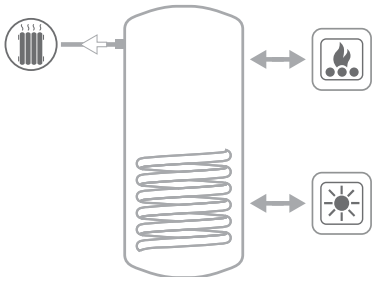

See TECHNICAL SUPPORT chapter for example of installation

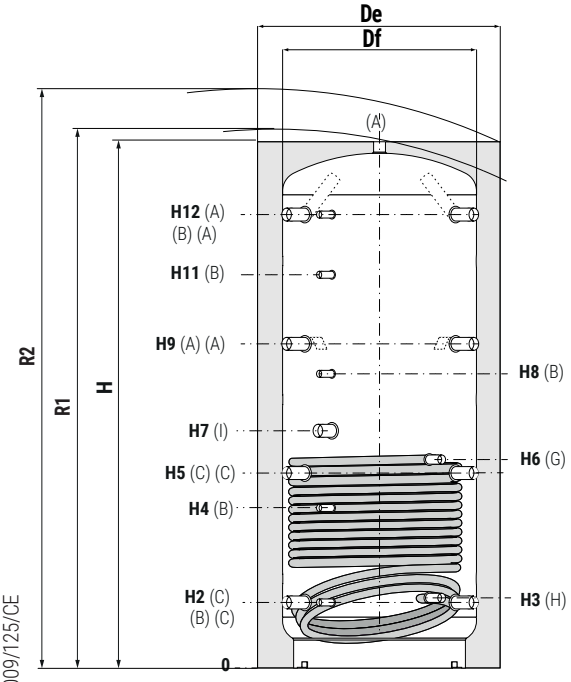

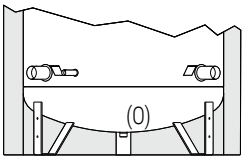

Standard supporting feet for models 3000 and 5000. Drain welded on the bottom.

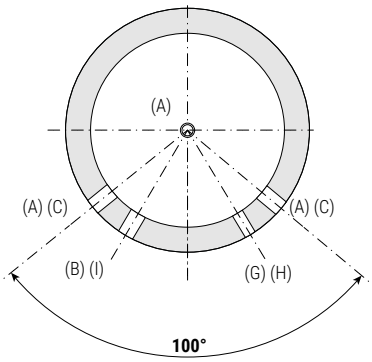

A	Heating delivery/from generator
B	Connection for instrumentation 1/2" F
C	Heating return/to generator
I	Connection for electric immersion heater
G	Heat exchanger inlet 1" F
H	Heat exchanger outlet 1" F
O	Drain only for models 3000 and 5000

Model	Volume	Df (vers. VC)	De (vers. VC)	De (vers. VB)	H	R1	R2	H2	H3	H4
	[lt]	[mm]				[mm]				
300	279	//	//	650	1340	//	1495	232	217	444
500	478	//	//	750	1620	//	1790	247	260	533
600	560	//	//	750	1870	//	2020	247	260	582
750	717	790	1010	950	1658	1665	1915	265	278	584
800	805	790	1010	950	1840	1845	2075	265	278	584
1000	946	790	1010	950	2130	2135	2340	265	284	656
1250	1248	//	//	1050	2201	//	2445	313	326	705
1500	1454	950	1210	1100	2250	2255	2510	313	336	736
2000	1973	1100	1360	1300	2320	2325	2665	347	370	770
3000	2915	1250	1450	//	2814	2820	3170	556	569	1017
5000	4985	1600	1800	//	2929	2935	3445	586	609	1047

Model	H5	H6	H7	H8	H9	H11	H12	A - C - I	O
	[mm]							Connections F	
300	514	514	590	725	796	885	1078	1"1/2	//
500	629	745	841	930	1011	1231	1343	1"1/2	//
600	695	855	915	1060	1144	1382	1593	1"1/2	//
750	630	679	823	938	995	1180	1371	1"1/2	//
800	690	762	823	988	1115	1332	1541	1"1/2	//
1000	787	953	998	1188	1309	1588	1831	1"1/2	//
1250	835	884	986	1168	1357	1568	1879	1"1/2	//
1500	845	1006	1061	1286	1377	1653	1909	1"1/2	//
2000	879	1001	1060	1300	1411	1687	1943	1"1/2	//
3000	1071	1551	1693	1879	1786	2140	2402	2"	1"
5000	1101	1522	1691	1889	1816	2159	2432	2"	2"

P.E.D. product designed and produced in conformity to the article 4.3 of directive 2014/68/UE - ErP Ecodesgin directive 2009/125/CE

PUFFER **2**

HEATING WATER BUFFER TANK WITH 2 FIXED HEAT EXCHANGERS



APPLICATION
Efficient storage of heating hot water mostly using biomass, heat pumps or solar thermal energy sources.
MATERIAL
Mild steel construction with exterior paint. No anti-corrosion treatment required due to the buffer's closed circuit system.
HEAT EXCHANGER
N° 2 mild steel fixed heat exchangers.
TECHNICAL DESCRIPTION
Used to improve flexibility of pellets, stoves and burners. PUFFER 2 are used in units with a typically discontinuous energy source such as biomass boiler and solar thermal system. PUFFER 2 allows the solar energy system integration as well as another heat source.

INSULATION
- HARD: High thermal insulation with ecological polyurethane hard foam.
- SOFT: NOFIRE® polyester fleece 100% made of recyclable material, with high thermal insulation. Fire resistance class B-s2d0 according to EN 13501.

Grey PVC external lining, complete with top and flange cover.
WARRANTY
5 years - See general sales conditions and warranty
ACCESSORIES AND SPARE PARTS
See Accessories section for the entire list.



cordivari.com/erp



On line ErP label tool

PUFFER 2 VB

Model	HARD FOAM insulation	Heat exchanger surface Upper	Heat exchanger surface Lower	Energy efficiency class ErP
	Art. Nr.	[m²]		
500	3251162312703	1,3	1,9	**C**
600	3251162312704	1,3	2,1	**C**
750	3251162312715	1,5	2,3	**B**
800	3251162312716	1,8	2,5	**B**
1000	3251162312717	2,5	3,1	**C**
1500	3251162312709	2,8	3,8	**C**
2000	3251162312710	2,8	4,6	**B**

PUFFER 2 VB

Model	DISMOUNTABLE HARD FOAM insulation	Heat exchanger surface Upper	Heat exchanger surface Lower	Energy efficiency class ErP
	Art. Nr.	[m²]		
750	3251162312705	1,5	2,3	**B**
800	3251162312706	1,8	2,5	**B**
1000	3251162312707	2,5	3,1	**C**

PUFFER 2 VC

Model	DISMOUNTABLE SOFT FLEECE insulation	Heat exchanger surface Upper	Heat exchanger surface Lower	Energy efficiency class ErP
	Art. Nr.	[m²]		
750	3251162282824	1,5	2,3	**C**
800	3251162282825	1,8	2,5	**C**
1000	3251162282826	2,5	3,1	**C**
1500	3251162282827	2,8	3,8	**C**
2000	3251162282828	2,8	4,6	**C**

ACCESSORIES

THREEPHASE and MONOPHASE Electric immersion heaters




Available kit:	
[Kw]	Tension [V]
da **1,5** a **3**	220 - MONOPHASE
da **4** a **9**	400 - THREEPHASE
See accessories	

Thermometer

Art. Nr.
5032240000107
5 units box



Buffer tanks connecting kit

Art. Nr.	Connection
5006170001001	1" 1/2
Stainless steel extensible connecting kit - (200 ÷ 400 mm)	



P.E.D. product designed and produced in conformity to the article 4.3 of directive 2014/68/UE - ErP Ecodesgin directive 2009/125/CE

PUFFER **2**

HEATING WATER BUFFER TANK WITH 2 FIXED HEAT EXCHANGERS

STORAGE		HEAT EXCHANGER	
Pmax	Tmax	Pmax	Tmax
3 bar	99 °C	12 bar	110 °C

CORDIVARI Lab

TÜV Rheinland Energie und Umwelt GmbH states that test procedures and Cordivari LAB are certified conforming to European standard EN 15332, as indicated by Ecodesign ErP Directive.

TESTED ErP

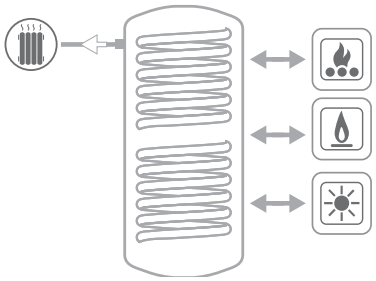

See TECHNICAL SUPPORT chapter for example of installation

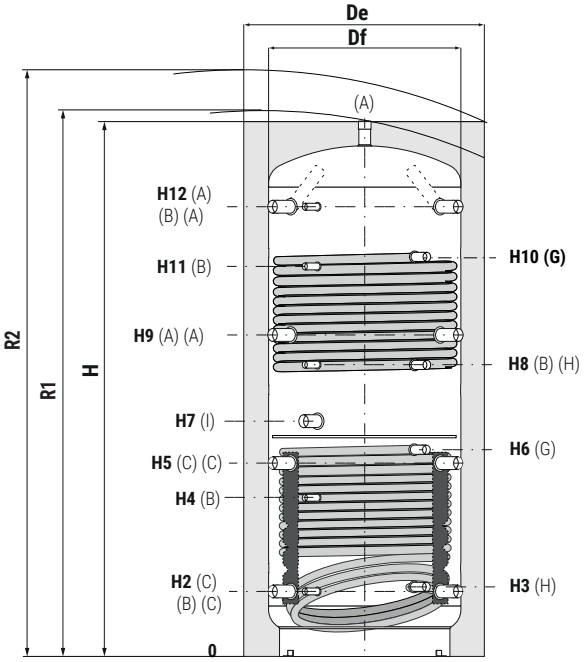

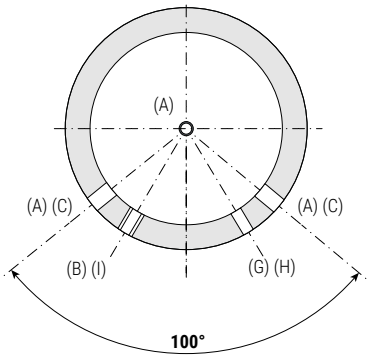

A	Heating delivery/from generator
B	Connection for instrumentation 1/2" F
C	Heating return/to generator
I	Connection for electric immersion heater
G	Heat exchanger inlet 1" F
H	Heat exchanger outlet 1" F

Model	Volume	Df (vers. VC)	De (vers. VC)	De (vers. VB)	H	R1	R2	H2	H3
	[lt]	[mm]		[mm]					
500	478	//	//	750	1620	//	1790	247	260
600	560	//	//	750	1870	//	2020	247	260
750	717	790	1010	950	1658	1710	1915	265	278
800	805	790	1010	950	1840	1890	2075	265	278
1000	946	790	1010	950	2130	2175	2340	265	284
1500	1435	950	1210	1100	2250	2305	2510	313	336
2000	1973	1100	1360	1300	2320	2390	2665	347	370

Model	H4	H5	H6	H7	H8	H9	H10	H11	H12	A - C - I
	[mm]									Connections F
500	533	629	745	841	930	1011	1231	1231	1343	1"1/2
600	582	695	855	915	1060	1144	1361	1382	1593	1"1/2
750	584	630	679	823	938	995	1196	1180	1371	1"1/2
800	584	690	762	823	988	1115	1332	1332	1541	1"1/2
1000	656	787	953	998	1188	1309	1661	1588	1831	1"1/2
1500	736	845	1006	1061	1286	1377	1672	1653	1909	1"1/2
2000	770	879	1001	1060	1300	1411	1687	1687	1943	1"1/2

P.E.D. product designed and produced in conformity to the article 4.3 of directive 2014/68/UE - ErP Ecodesgin directive 2009/125/CE

PUFFER **1**

LOWER HEAT EXCHANGER POWER



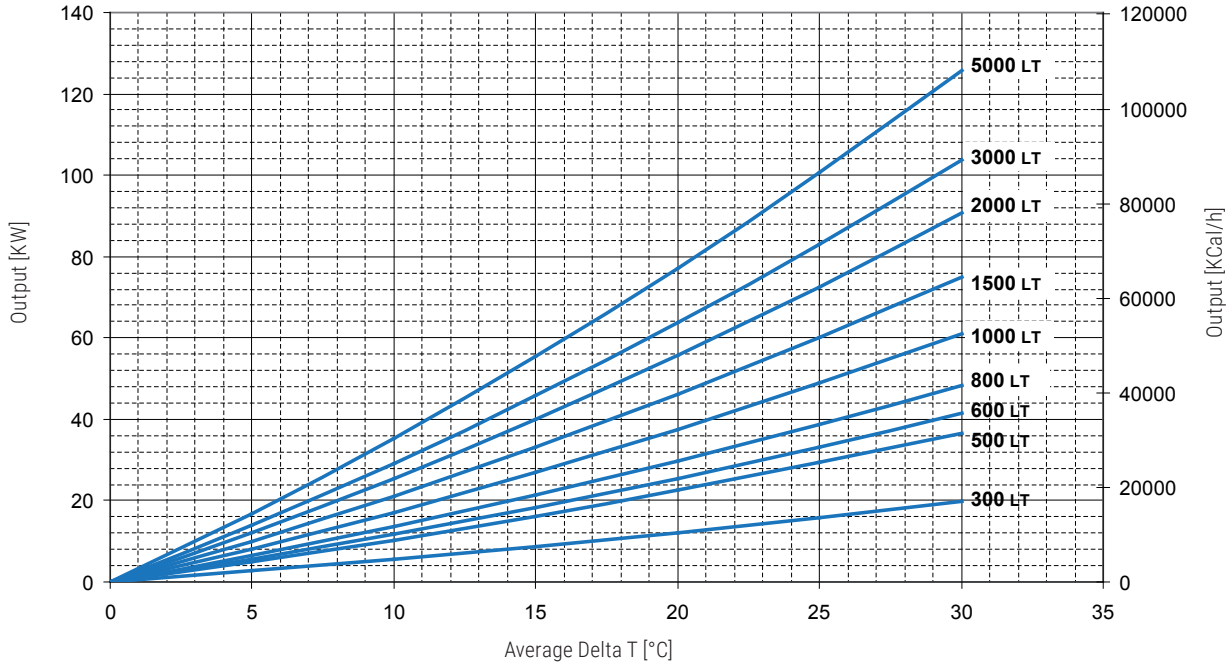

Thermal output is given in both kW or kcal/h in terms of average temperature difference between primary and secondary circuit, all for a range of primary 3 m^3/h. For example, a PUFFER 1 T of 1000 liters capacity with a water flow of 3 m^3/h at 80 °C inlet and outlet at 70 °C, has on the storage of water an average temperature of 60 °C, the main difference of temperature will be:
(80 +70) / 20-60 = 15 °C and therefore you can exchange up to approximately 34 kW.

Output of the lower heat exchangers PUFFER 1 depending on the average DeltaT between primary and accumulation considering flow rate 3 m^3/h.

LOWER HEAT EXCHANGER PRESSURE LOSS

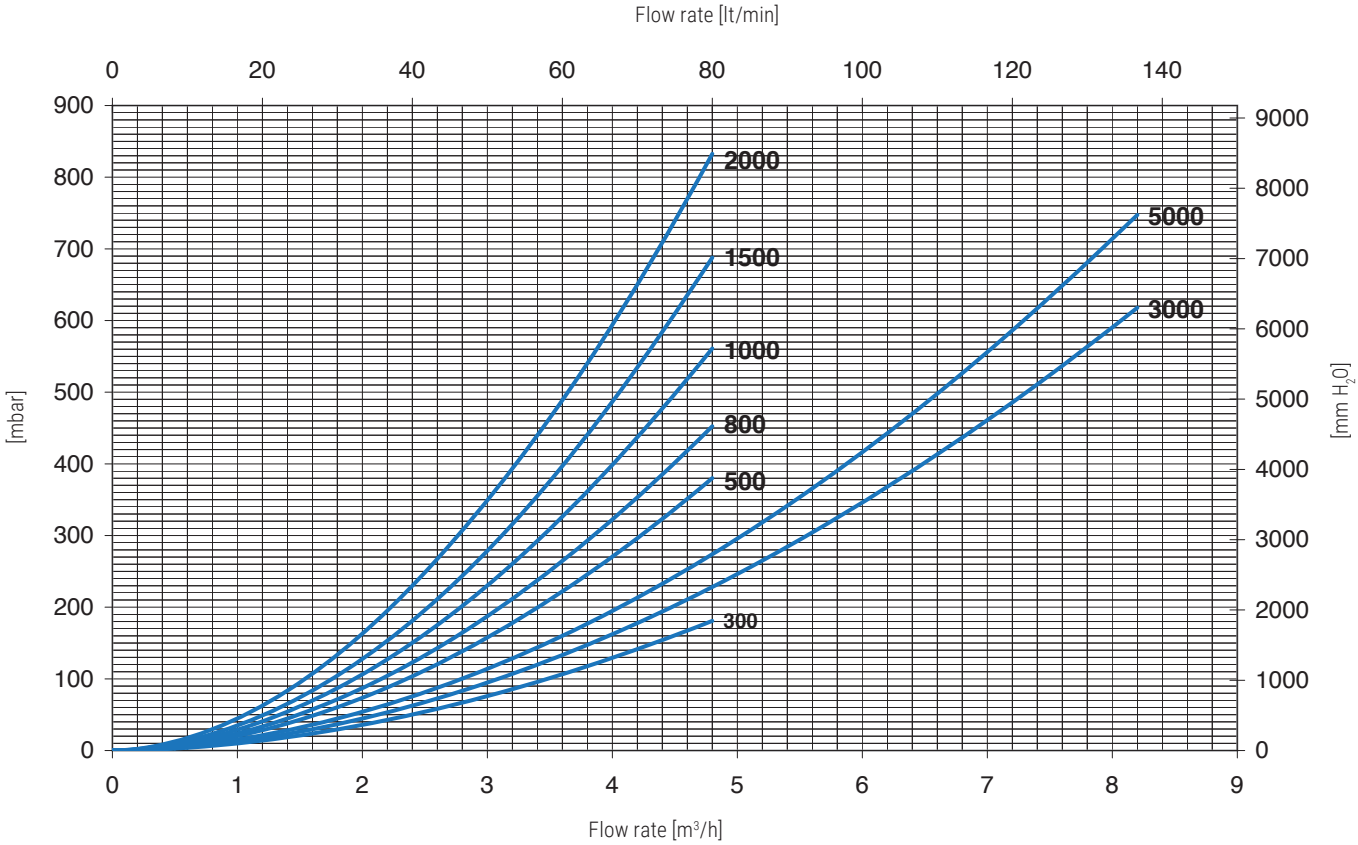

PUFFER **2**

UPPER HEAT EXCHANGER POWER



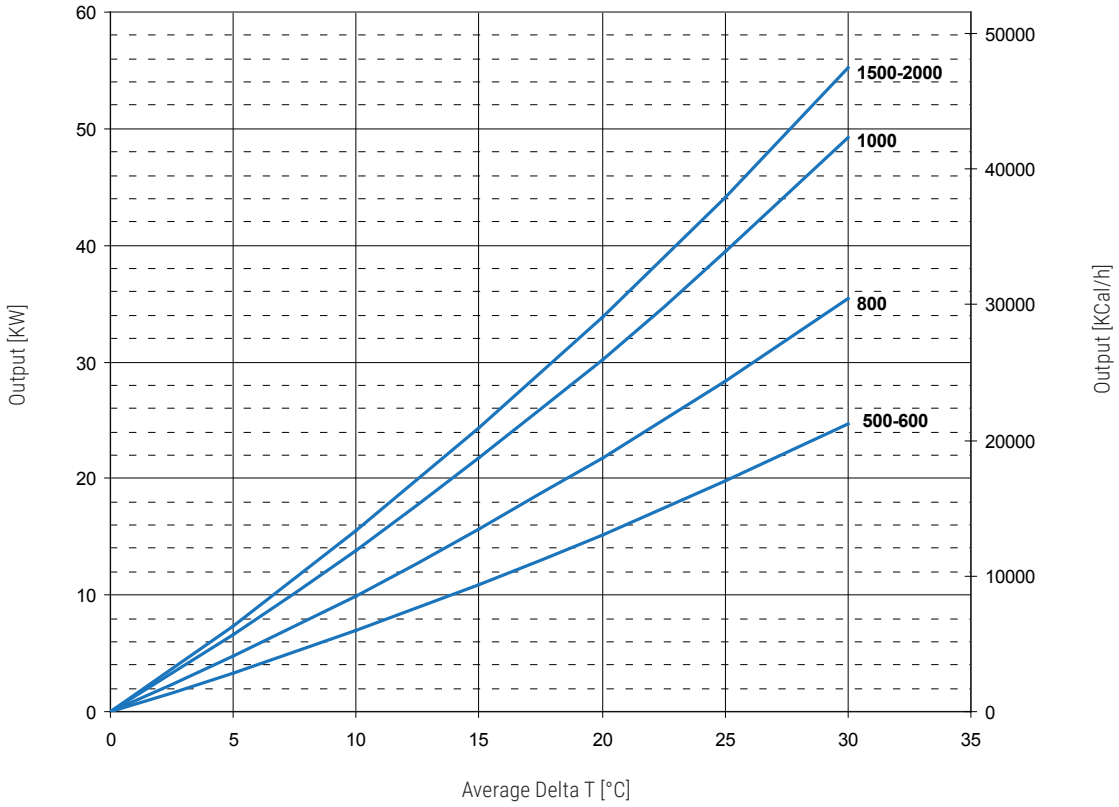

Output of the upper heat exchangers PUFFER 2 depending on the average DeltaT between primary and accumulation considering flow rate 3 m^3/h.

UPPER HEAT EXCHANGER PRESSURE LOSS

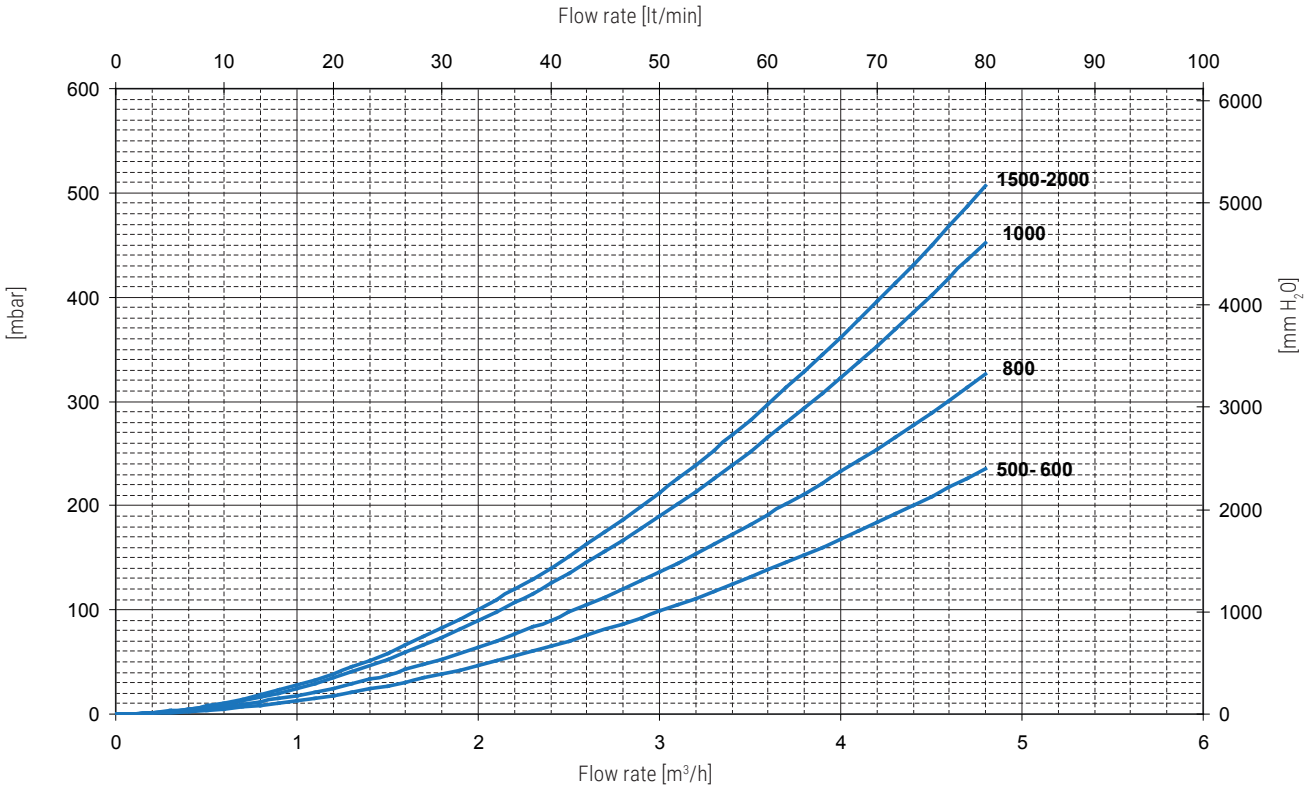

For lower exchanger power data see PUFFER 1

PUFFER **1 CTS®**

STORAGE BUFFER TANKS FOR HEATING WATER WITH STRATIFICATION DEVICE AND 1 FIXED HEAT EXCHANGER



APPLICATION
Efficient storage of heating hot water mostly using biomass, heat pumps or solar thermal energy sources.
MATERIAL
Mild steel construction with exterior paint. No anti-corrosion treatment required due to the buffer's closed circuit system.
HEAT EXCHANGER
N° 1 mild steel fixed heat exchanger with CTS® stratificator system.
TECHNICAL DESCRIPTION
Used to improve flexibility of pellets, stoves and burners. PUFFER 1 CTS® are used in units with a typically discontinuous energy source such as biomass boiler and solar thermal systems.
PUFFER 1 CTS® is characterized by multiple stratification system based on the combination of Cordivari Labyrinth spreader for returning heating water with a new stratification device that conveys in the upper part of the tank the heated water up by the lower fixed exchanger. This combination ensures a perfect natural stratification inside the tank with no valve or additional external device.
The lower fixed exchanger can be connected with a solar system. Positioned at the bottom lower part of the buffer tank and with very small footprint, it increases the volume available for the storage.

INSULATION
High thermal insulation with ecological hard polyurethane foam. Grey PVC external lining.
WARRANTY
5 years - See general sales conditions and warranty
ACCESSORIES AND SPARE PARTS
See Accessories section for the entire list.



cordivari.com/erp



On line ErP label tool

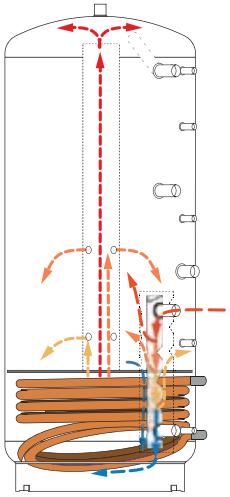

SUITABLE FOR SOLAR THERMAL SYSTEMS

THE ILLUSTRATION UNDERLINES THE STRATIFICATION PROCESS (FROM TOP TO BOTTOM) THAT ALLOWS TO HAVE ALL NEEDED ENERGY RAPIDLY AVAILABLE



PUFFER 1 CTS® VB

Model	HARD FOAM insulation Art. Nr.	HEAT EXCHANGER SURFACE [m²]	ENERGY EFFICIENCY CLASS
500	3251162313002	1,9	**C**
600	3251162313003	2,1	**C**
800	3251162313014	2,5	**B**
1000	3251162313015	3,1	**C**
1500	3251162313006	3,8	**C**
2000	3251162313007	4,6	**B**



PUFFER 1 CTS® VB

Model	DISMOUNTABLE HARD FOAM insulation Art. Nr.	HEAT EXCHANGER SURFACE [m²]	ENERGY EFFICIENCY CLASS
800	3251162313004	2,5	**B**
1000	3251162313005	3,1	**C**

ACCESSORIES

Electric immersion heaters MONOPHASE and THREEPHASE




Available kit:	
[Kw]	Tension [V]
da **1,5** a **3**	220 - MONOPHASE
da **4** a **9**	400 - THREEPHASE
See accessories	

Thermometer

Art. Nr.
5032240000107
5 units box



Buffer tanks connecting kit

Art. Nr.	Connection
5006170001001	1" 1/2
Stainless steel extensible connecting kit - (200 ÷ 400 mm)	



P.E.D. product designed and produced in conformity to the article 4.3 of directive 2014/68/UE - ErP Ecodesgin directive 2009/125/CE

PUFFER **1 CTS®**

STORAGE BUFFER TANKS FOR HEATING WATER WITH STRATIFICATION DEVICE AND 1 FIXED HEAT EXCHANGER

STORAGE		HEAT EXCHANGER	
Pmax	Tmax	Pmax	Tmax
3 bar	99 °C	12 bar	110 °C

CORDIVARI Lab

TÜV Rheinland Energie und Umwelt GmbH states that test procedures and Cordivari LAB are certified conforming to European standard EN 15332, as indicated by Ecodesign ErP Directive.

TESTED ErP

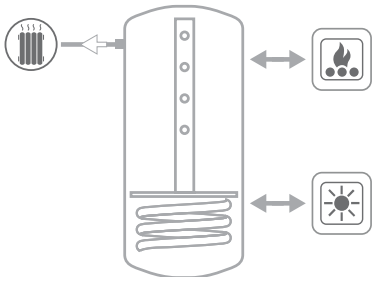

See TECHNICAL SUPPORT chapter for example of installation

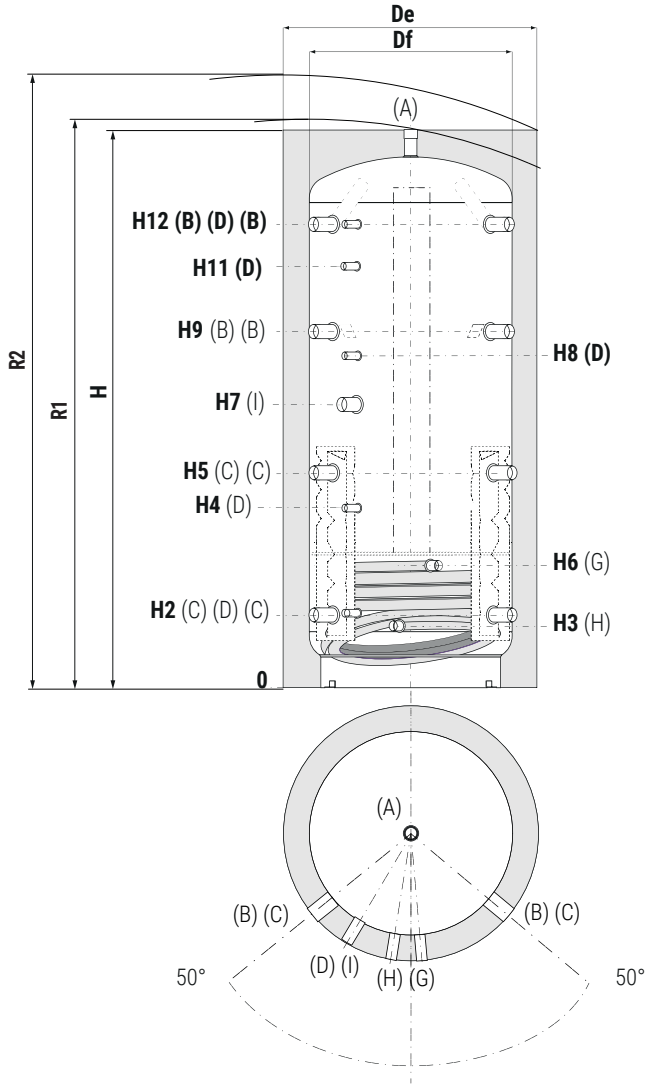

A	Heating delivery/from generator/air purge 1"1/2 F
B	Heating delivery/from generator 1"1/2 F
C	Heating return/to generator 1"1/2 F
D	Probe 1/2" F
G	Heat exchanger inlet 1" F
H	Heat exchanger outlet 1" F
I	Connection for electric immersion heater 1"1/2 F

Model	Volume	De	Df	H	R1	R2	H2	H3	H4	H5	H7	H8	H9	H11	H12
	[lt]	[mm]													
500	478	750	//	1620	//	1790	247	215	533	629	841	930	1011	1231	1343
600	560	750	//	1870	//	2020	247	215	582	695	915	1060	1144	1382	1593
800	805	950	790	1840	1890	2075	265	233	584	690	823	988	1115	1332	1541
1000	946	950	790	2130	2175	2340	265	233	656	787	998	1188	1309	1588	1831
1500	1435	1100	//	2250	//	2510	313	281	736	845	1061	1286	1377	1653	1909
2000	1973	1300	//	2320	//	2665	347	315	770	879	1060	1300	1411	1687	1943

P.E.D. product designed and produced in conformity to the article 4.3 of directive 2014/68/UE - ErP Ecodesgin directive 2009/125/CE

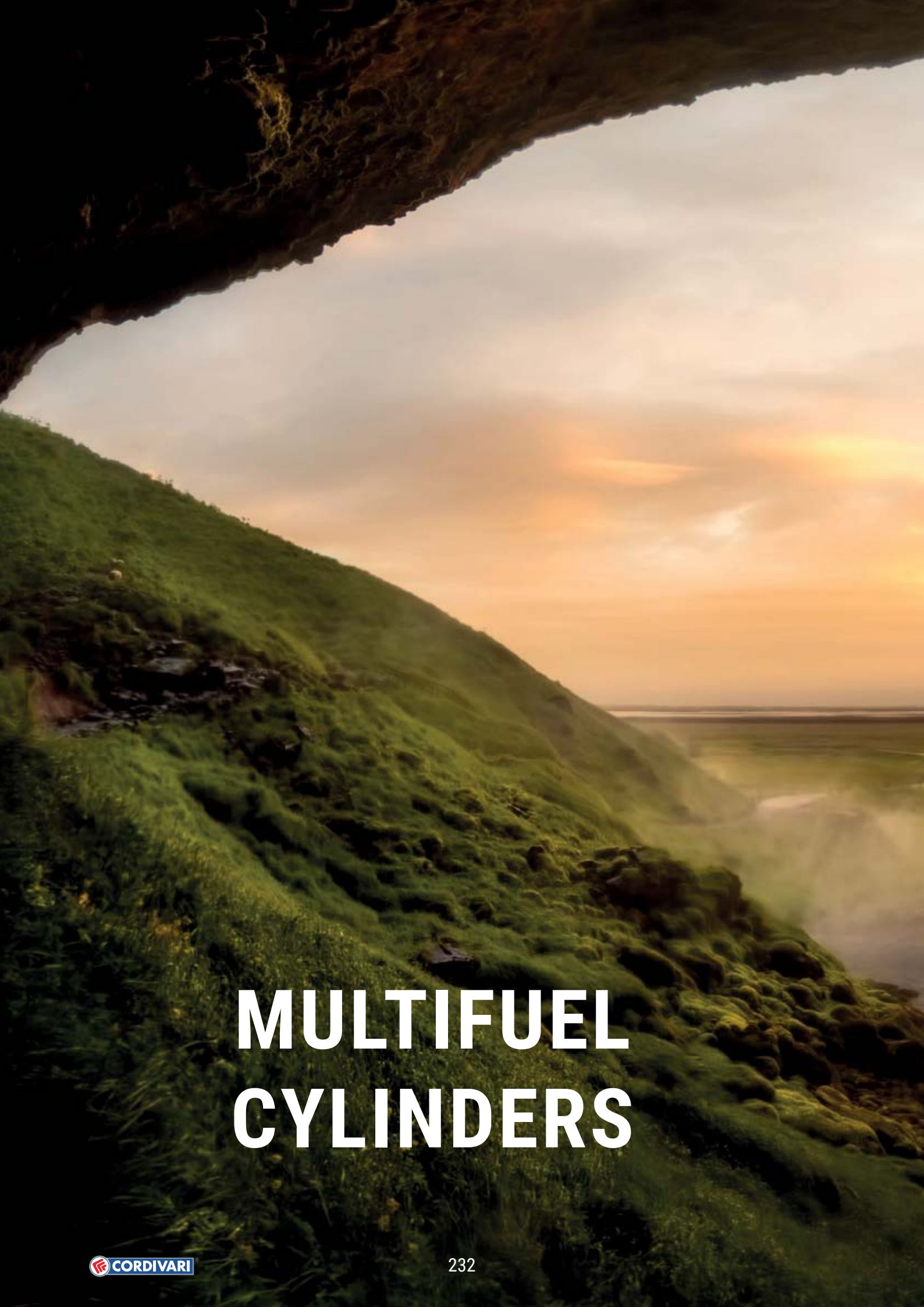

MULTIFUEL CYLINDERS



MULTIFUEL ENERGY CYLINDERS RANGE

DHW production

Heating system







	COMBI	ECO-COMBI	ECO-COMBI "DOMUS"
Heat exchanger model	-Fixed coil heat exchanger - D.H.W. storage material: Stainless steel 316L / Polywarm®	- Fixed coil heat exchanger - Corrugated Stainless steel 316L coil for d.H.W. Production	- Fixed coil heat exchanger - Corrugated Stainless steel 316L coil for d.H.W. Production
Number of heat exchangers			
Energy source			
Energy efficiency class	**B-C**	**B-C**	**B**
Insulation	- Polyurethane hard foam - Dismountable polyester fleece	- Polyurethane hard foam - Dismountable polyester fleece	Polyurethane hard foam
Available range	500 ÷ 2000	500 ÷ 2000	200 - 300
Installation	floor standing	floor standing	floor standing
Suggested Application	Biomass and other energy source installations	Biomass and other energy source installations	Biomass and other energy source installations







PUFFERMAS®	PUFFERMAS® CTS	PUFFERMAS® CTS POWER
- MACS® module for DHW production	- Fixed coil heat exchanger - MACS® module for DHW production	- Fixed coil heat exchanger - MACS® module for DHW production - Integrated solar station
		
		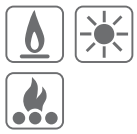
B-C	**B-C**	**B-C**
Polyurethane hard foam	Polyurethane hard foam	Polyurethane hard foam
500 ÷ 1500	500 ÷ 1500	500 ÷ 1500
floor standing	floor standing	floor standing
Biomass and other energy source installations	Biomass and solar installations	Biomass and solar installations

COMBI **1**

MULTI-HEAT ENERGY BUFFER WITH POLYWARM® COATED TANK IN TANK CALORIFIER FOR D.H.W.



APPLICATION
Heating hot water storage and D.H.W. production.
MATERIAL
Buffer tank: Mild steel construction with exterior paint. No anti-corrosion treatment required due to the buffer's closed circuit system.
D.H.W. storage: Mild steel Polywarm® coated (Attestation ACS - SSICA - DVGW - W270 - WRAS)
TECHNICAL DESCRIPTION
Multi-Heat Energy tanks Combi1 are used in units with a typically discontinuous energy source for double use: heating system and sanitary hot water system.

INSULATION
- HARD: High thermal insulation with ecological polyurethane hard foam.
- SOFT: NOFIRE® polyester fleece 100% made of recyclable material, with high thermal insulation. Fire resistance class B-s2d0 according to EN 13501.

Grey PVC external lining, complete with top and flange cover.
CATHODE PROTECTION
Chain magnesium anode
WARRANTY
5 years - See general sales conditions and warranty
ACCESSORIES AND SPARE PARTS
See Accessories section for the entire list.

POLYWARM® COATED DHW STORAGE

STOCK AVAILABILITY



cordivari.com/erp



On line ErP label tool

COMBI 1 WB



Model	HARD FOAM insulation	D.H.W. STORAGE Volume	D.H.W. STORAGE Surface	ENERGY EFFICIENCY CLASS
	Art. Nr.	[lt]	[m²]	ErP
500	3270162314001	99	1,1	**C**
600	3270162314002	146	1,3	**C**
800	3270162314003	191	1,6	**B**
1000	3270162314004	226	1,8	**C**
1500	3270162314005	412	2,5	**C**
2000	3270162314006	566	3,1	**B**

COMBI 1 WC



Model	DISMOUNTABLE SOFT FLEECE insulation	D.H.W. STORAGE Volume	D.H.W. STORAGE Surface	ENERGY EFFICIENCY CLASS
	Art. Nr.	[lt]	[m²]	ErP
800	3270162284012	191	1,6	**C**
1000	3270162284013	226	1,8	**C**
1500	3270162284014	412	2,5	**C**
2000	3270162284015	566	3,1	**C**

AVAILABLE IN STAINLESS STEEL 316L MODELS
SEE STAINLESS STEEL CHAPTER

ACCESSORIES

Thermometer

Art. Nr.
5032240000107
5 units box



Chain magnesium anode (connection 3/4")

Art. Nr.	For models
5200000041007	800÷2000
5200000041016	500,600
N° 2 chain anodes + insulated cap + gasket	

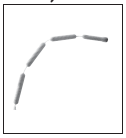

Buffer tanks connecting kit

Art. Nr.	Connection
5006170001001	1" 1/2
Stainless steel extensible connecting kit - (200 ÷ 400 mm)	



P.E.D. product designed and produced in conformity to the article 4.3 of directive 2014/68/UE - ErP Ecodesgin directive 2009/125/CE

COMBI **1**

MULTI-HEAT ENERGY BUFFER WITH POLYWARM® COATED TANK IN TANK CALORIFIER FOR D.H.W.

TECHNICAL STORAGE		D.H.W. STORAGE	
Pmax	Tmax	Pmax	Tmax
3 bar	99 °C	6 bar	90 °C

CORDIVARI Lab

TÜV Rheinland Energie und Umwelt GmbH states that test procedures and Cordivari LAB are certified conforming to European standard EN 15332, as indicated by Ecodesign ErP Directive.

TESTED ErP

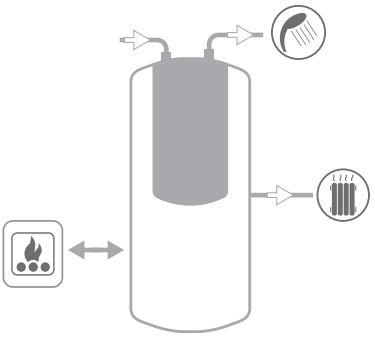

See TECHNICAL SUPPORT chapter for example of installation

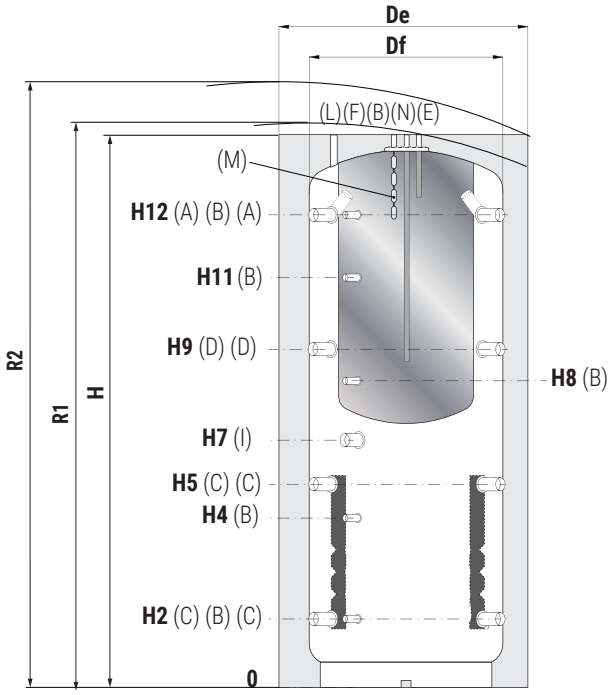

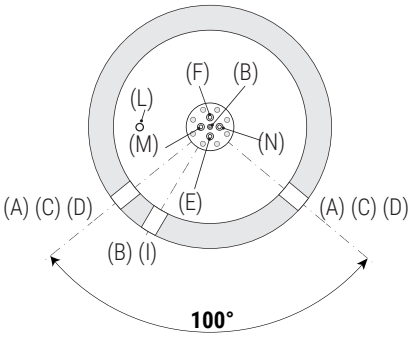

A	Heating delivery/From generator 1"1/2 F
B	Connection for instrumentation 1/2" F
C	Heating return/to generator 1"1/2 F
D	Heating delivery 1"1/2 F
E	Domestic hot water outlet 3/4" F
F	Domestic cold water circuit inlet 3/4" F
I	Connection for electric immersion heater 1"1/2 F
L	Air purge 1/2" F
M	Chain magnesium anode 3/4" F
N	Recirculation 3/4" F



Dismountable insulation

COMBI 1 WB - DISMOUNTABLE SOFT FLEECE INSULATION

Model	Volume	Df	De	H	R1	R2	H2	H4	H5	H7	H8	H9	H11	H12
	[lt]							[mm]						
500	478	//	750	1670	//	1835	247	533	629	841	930	1011	1231	1343
600	560	//	750	1920	//	2070	247	582	695	915	1060	1144	1382	1593
800	805	790	950	1855	1900	2120	265	584	690	823	988	1115	1332	1541
1000	946	790	950	2150	2180	2380	265	656	787	998	1188	1309	1588	1831
1500	1454	//	1100	2280	//	2590	313	736	845	1061	1286	1377	1653	1909
2000	1973	//	1300	2345	//	2715	347	770	879	1060	1300	1411	1687	1943

COMBI 1 WC - DISMOUNTABLE SOFT FLEECE INSULATION

Model	Volume	Df	De	H	R1	R2	H2	H4	H5	H7	H8	H9	H11	H12
	[lt]							[mm]						
800	805	790	1010	1855	1900	2090	265	584	690	823	988	1115	1332	1541
1000	946	790	1010	2150	2180	2355	265	656	787	998	1188	1309	1588	1831
1500	1454	950	1210	2280	2315	2540	313	736	845	1061	1286	1377	1653	1909
2000	1973	1100	1360	2345	2400	2690	347	770	879	1060	1300	1411	1687	1943

P.E.D. product designed and produced in conformity to the article 4.3 of directive 2014/68/UE - ErP Ecodesgin directive 2009/125/CE

CORDIVARI

COMBI **2**

MULTI-HEAT ENERGY BUFFER WITH POLYWARM® COATED TANK IN TANK CALORIFIER FOR D.H.W. AND 1 FIXED HEAT EXCHANGER



APPLICATION
Heating hot water storage and D.H.W. production.
MATERIAL
Buffer tank: Mild steel construction with exterior paint. No anti-corrosion treatment required due to the buffer's closed circuit system.
D.H.W. storage: Mild steel Polywarm® coated (Attestation ACS - SSICA - DVGW - W270 - WRAS)
HEAT EXCHANGER
N° 1 fixed heat exchanger.
TECHNICAL DESCRIPTION
Multi-Heat Energy tanks Combi 1 are used in units with a typically discontinuous energy source for double use: heating systems and domestic hot water systems.

INSULATION
- HARD: High thermal insulation with ecological polyurethane hard foam.
- SOFT: NOFIRE® polyester fleece 100% made of recyclable material, with high thermal insulation. Fire resistance class B-s2d0 according to EN 13501.

Grey PVC external lining, complete with top and flange cover.
CATHODE PROTECTION
Chain magnesium anode
WARRANTY
5 years - See general sales conditions and warranty
ACCESSORIES AND SPARE PARTS
See Accessories section for the entire list.

POLYWARM® COATED DHW STORAGE

STOCK AVAILABILITY



cordivari.com/erp



On line ErP label tool

COMBI 2 WB

Model	HARD FOAM insulation	D.H.W. Storage Volume	D.H.W. Storage Surface	Heat exchanger Volume	Heat exchanger Surface	Energy efficiency class
	Art. Nr.	[lt]	[m²]	[lt]	[m²]	ErP
500	3270162314101	99	1,1	11,5	1,9	**C**
600	3270162314102	146	1,3	18	2,8	**C**
800	3270162314103	191	1,6	20	3,1	**B**
1000	3270162314104	226	1,8	24	3,7	**C**
1500	3270162314105	412	2,5	32	4,9	**C**
2000	3270162314106	566	3,1	35	5,4	**B**

COMBI 2 WC

Model	DISMOUNTABLE SOFT FLEECE insulation	D.H.W. Storage Volume	D.H.W. Storage Surface	Heat exchanger Volume	Heat exchanger Surface	Energy efficiency class
	Art. Nr.	[lt]	[m²]	[lt]	[m²]	ErP
800	3270162284112	191	1,6	20	3,1	**C**
1000	3270162284113	226	1,8	24	3,7	**C**
1500	3270162284114	412	2,5	32	4,9	**C**
2000	3270162284115	566	3,1	35	5,4	**C**

ACCESSORIES

Thermometer

Art. Nr.
5032240000107
5 units box



Chain magnesium anode (connection 3/4")

Art. Nr.	For models
5200000041007	800÷2000
5200000041016	500,600
N° 2 chain anodes + insulated cap + gasket	

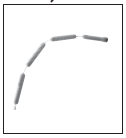

Buffer tanks connecting kit

Art. Nr.	Connection
5006170001001	1" 1/2
Stainless steel extensible connecting kit - (200 ÷ 400 mm)	



P.E.D. product designed and produced in conformity to the article 4.3 of directive 2014/68/UE - ErP Ecodesgin directive 2009/125/CE

COMBI **2**

MULTI-HEAT ENERGY BUFFER WITH POLYWARM® COATED TANK IN TANK CALORIFIER FOR D.H.W. AND 1 FIXED HEAT EXCHANGER

TECHNICAL STORAGE		D.H.W. STORAGE		FIXED HEAT EXCHANGER	
Pmax	Tmax	Pmax	Tmax	Pmax	Tmax
3 bar	99 °C	6 bar	90 °C	12 bar	110 °C

CORDIVARI Lab

TÜV Rheinland Energie und Umwelt GmbH states that test procedures and Cordivari LAB are certified conforming to European standard EN 15332, as indicated by Ecodesign ErP Directive.

TESTED ErP

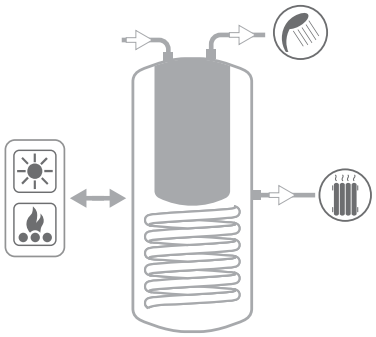

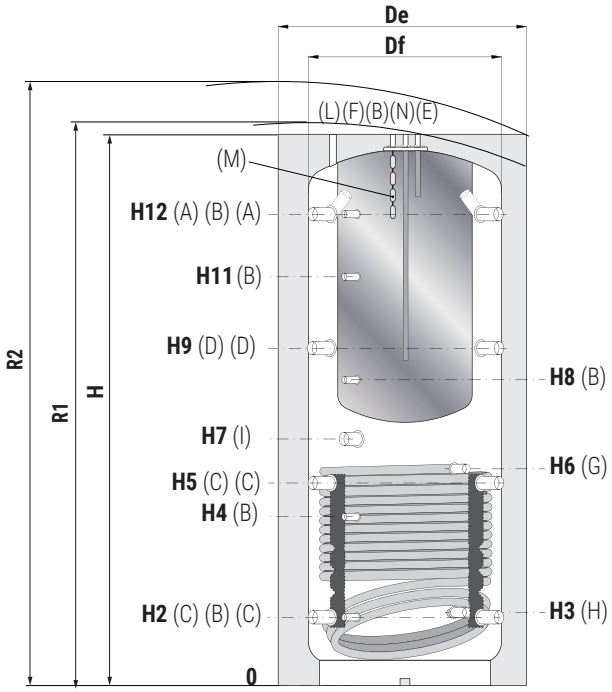

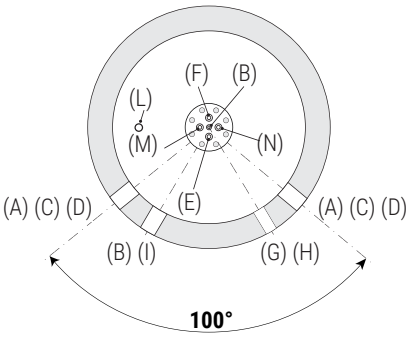

A	Heating delivery/From generator 1"1/2 F
B	Connection for instrumentation 1/2" F
C	Heating return/to generator 1"1/2 F
D	Heating delivery 1"1/2 F
E	Domestic hot water outlet 3/4" F
F	Domestic cold water circuit inlet 3/4" F
G	Heat exchanger inlet 1" F
H	Heat exchanger outlet 1" F
I	Connection for electric immersion heater 1"1/2 F
L	Air purge 1/2" F
M	Chain magnesium anode 3/4" F
N	Recirculation 3/4" F

Dismountable insulation

COMBI 2 WB - DISMOUNTABLE SOFT FLEECE INSULATION

Model	Volume	Df	De	H	R1	R2	H2	H3	H4	H5	H6	H7	H8	H9	H11	H12
	[lt]	[mm]														
500	478	//	750	1670	//	1835	247	260	533	629	744	841	930	1011	1231	1343
600	560	//	750	1920	//	2070	247	260	582	695	855	915	1060	1144	1382	1593
800	805	790	950	1855	1900	2120	265	278	584	690	762	823	988	1115	1332	1541
1000	946	790	950	2150	2180	2380	265	284	656	787	953	998	1188	1309	1588	1831
1500	1454	//	1100	2280	//	2590	313	336	736	845	1006	1061	1286	1377	1653	1909
2000	1973	//	1300	2345	//	2715	347	370	770	879	1001	1060	1300	1411	1687	1943

COMBI 2 WC - DISMOUNTABLE SOFT FLEECE INSULATION

Model	Volume	Df	De	H	R1	R2	H2	H3	H4	H5	H6	H7	H8	H9	H11	H12
	[lt]	[mm]														
800	805	790	1010	1855	1900	2090	265	278	584	690	762	823	988	1115	1332	1541
1000	946	790	1010	2150	2180	2355	265	284	656	787	953	998	1188	1309	1588	1831
1500	1454	950	1210	2280	2315	2540	313	336	736	845	1006	1061	1286	1377	1653	1909
2000	1973	1100	1360	2345	2400	2690	347	370	770	879	1001	1060	1300	1411	1687	1943

P.E.D. product designed and produced in conformity to the article 4.3 of directive 2014/68/UE - ErP Ecodesgin directive 2009/125/CE

COMBI **3**

MULTI-HEAT ENERGY BUFFER WITH POLYWARM® COATED TANK IN TANK CALORIFIER FOR D.H.W. AND 2 FIXED HEAT EXCHANGERS



APPLICATION
Heating hot water storage and D.H.W. production.
MATERIAL
Buffer tank: Mild steel construction with exterior paint. No anti-corrosion treatment required due to the buffer's closed circuit system.
D.H.W. storage: Mild steel Polywarm® coated (Attestation ACS - SSICA - DVGW - W270 - WRAS)
HEAT EXCHANGERS
N° 2 fixed heat exchangers.
TECHNICAL DESCRIPTION
Multi-Heat Energy tanks Combi 3 are used in units with a typically discontinuous energy source for double use: heating systems and domestic hot water systems.

INSULATION
- HARD: High thermal insulation with ecological polyurethane hard foam.
- SOFT: NOFIRE® polyester fleece 100% made of recyclable material, with high thermal insulation. Fire resistance class B-s2d0 according to EN 13501.

Grey PVC external lining, complete with top and flange cover.
CATHODE PROTECTION
Chain magnesium anode
WARRANTY
5 years - See general sales conditions and warranty
ACCESSORIES AND SPARE PARTS
See Accessories section for the entire list.

POLYWARM® COATED DHW STORAGE

STOCK AVAILABILITY

COMBI 3 WB

Model	HARD FOAM insulation	D.H.W. STORAGE Volume	D.H.W. STORAGE Surface	UPPER HEAT EXCHANGER Volume	UPPER HEAT EXCHANGER Surface	LOWER HEAT EXCHANGER Volume	LOWER HEAT EXCHANGER Surface	ENERGY EFFICIENCY CLASS
	Art. Nr.	[lt]	[m²]	[lt]	[m²]	[lt]	[m²]	
500	3270162314201	99	1,1	8	1,3	11,5	1,9	C
600	3270162314202	146	1,3	12	1,9	18	2,8	C
800	3270162314203	191	1,6	16	2,4	20	3,1	B
1000	3270162314204	226	1,8	20	3,1	24	3,7	C
1500	3270162314205	412	2,5	23	3,5	32	4,9	C
2000	3270162314206	566	3,1	27	4,1	35	5,4	B



cordivari.com/erp



On line ErP label tool

COMBI 3 WC

Model	DISMOUNTABLE SOFT FLEECE insulation	D.H.W. STORAGE Volume	D.H.W. STORAGE Superf.	UPPER HEAT EXCHANGER Volume	UPPER HEAT EXCHANGER Superf.	LOWER HEAT EXCHANGER Volume	LOWER HEAT EXCHANGER Superf.	ENERGY EFFICIENCY CLASS
	Art. Nr.	[lt]	[m²]	[lt]	[m²]	[lt]	[m²]	
800	3270162284212	191	1,6	16	2,4	20	3,1	C
1000	3270162284213	226	1,8	20	3,1	24	3,7	C
1500	3270162284214	412	2,5	23	3,5	32	4,9	C
2000	3270162284215	566	3,1	27	4,1	35	5,4	C

ACCESSORIES

Thermometer

Art. Nr.
5032240000107
5 units box



Chain magnesium anode (connection 3/4")

Art. Nr.	For models
5200000041007	800÷2000
5200000041016	500,600
N° 2 chain anodes + insulated cap + gasket	

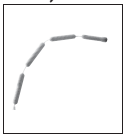

Buffer tanks connecting kit

Art. Nr.	Connection
5006170001001	1" 1/2
Stainless steel extensible connecting kit - (200 ÷ 400 mm)	



P.E.D. product designed and produced in conformity to the article 4.3 of directive 2014/68/UE - ErP Ecodesgin directive 2009/125/CE

COMBI **3**

MULTI-HEAT ENERGY BUFFER WITH POLYWARM® COATED TANK IN TANK CALORIFIER FOR D.H.W. AND 2 FIXED HEAT EXCHANGERS

TECHNICAL STORAGE		D.H.W. STORAGE		FIXED HEAT EXCHANGER	
Pmax	Tmax	Pmax	Tmax	Pmax	Tmax
3 bar	99 °C	6 bar	90 °C	12 bar	110 °C

CORDIVARI Lab

TÜV Rheinland Energie und Umwelt GmbH states that test procedures and Cordivari LAB are certified conforming to European standard EN 15332, as indicated by Ecodesign ErP Directive.

TESTED ErP

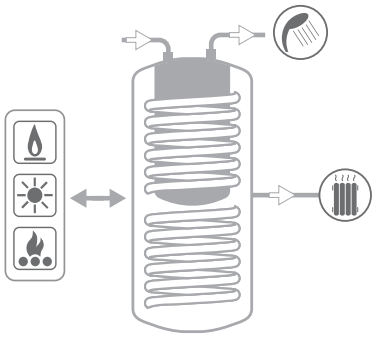

See TECHNICAL SUPPORT chapter for example of installation

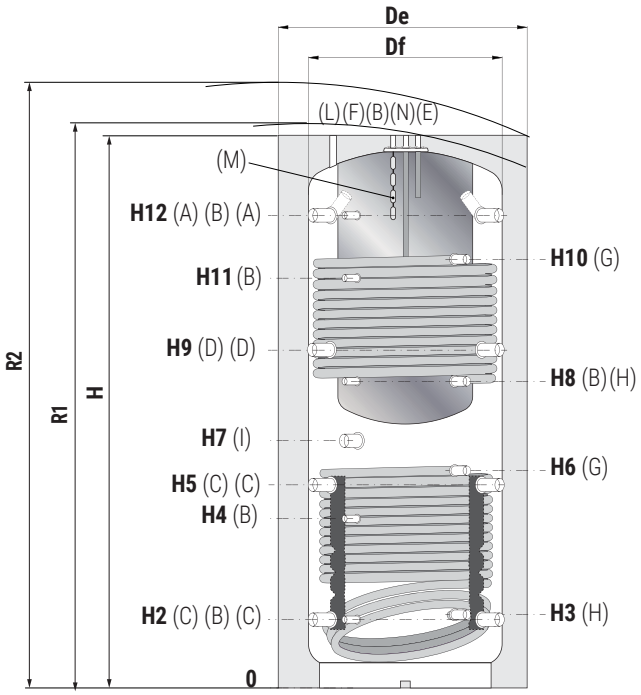

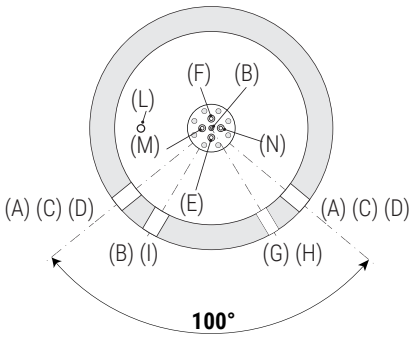

A	Heating delivery/From generator 1"1/2 F
B	Connection for instrumentation 1/2" F
C	Heating return/to generator 1"1/2 F
D	Heating delivery 1"1/2 F
E	Domestic hot water outlet 3/4" F
F	Domestic cold water circuit inlet 3/4" F
G	Heat exchanger inlet 1" F
H	Heat exchanger outlet 1" F
I	Connection for electric immersion heater 1"1/2 F
L	Air purge 1/2" F
M	Chain magnesium anode 3/4" F
N	Recirculation 3/4" F



Dismountable insulation

COMBI 3 WB - DISMOUNTABLE SOFT FLEECE INSULATION

Model	Volume	Df	De	H	R1	R2	H2	H3	H4	H5	H6	H7	H8	H9	H10	H11	H12
	[lt]	[mm]															
500	478	//	750	1670	//	1835	247	260	533	629	744	841	930	1011	1231	1231	1343
600	560	//	750	1920	//	2070	247	260	582	695	855	915	1060	1144	1500	1382	1593
800	805	790	950	1855	1900	2120	265	278	584	690	762	823	988	1115	1428	1332	1541
1000	946	790	950	2150	2180	2380	265	284	656	787	953	998	1188	1309	1748	1588	1831
1500	1454	//	1100	2280	//	2590	313	336	736	845	1006	1061	1286	1377	1805	1653	1909
2000	1973	//	1300	2345	//	2715	347	370	770	879	1001	1060	1300	1411	1820	1687	1943

COMBI 3 WC - DISMOUNTABLE SOFT FLEECE INSULATION

Model	Volume	Df	De	H	R1	R2	H2	H3	H4	H5	H6	H7	H8	H9	H10	H11	H12
	[lt]	[mm]															
800	805	790	1010	1855	1900	2090	265	278	584	690	762	823	988	1115	1428	1332	1541
1000	946	790	1010	2150	2180	2355	265	284	656	787	953	998	1188	1309	1748	1588	1831
1500	1454	950	1210	2280	2315	2540	313	336	736	845	1006	1061	1286	1377	1805	1653	1909
2000	1973	1100	1360	2345	2400	2690	347	370	770	879	1001	1060	1300	1411	1820	1687	1943

P.E.D. product designed and produced in conformity to the article 4.3 of directive 2014/68/UE - ErP Ecodesgin directive 2009/125/CE

COMBI

D.H.W. STORAGE PERFORMANCES



Model	DHW Volume	DHW exchanger surface	COMPLETE HEATED STORAGE VOLUME		UPPER PART HEATED STORAGE VOLUME	
			Max sanitary water produced from 10°C to 45°C with storage at 65°C and boiler on	Max sanitary water produced from 10°C to 45°C with storage at 65°C and boiler off	Max sanitary water produced from 10°C to 45°C with storage at 65°C and boiler on	Max sanitary water produced from 10°C to 45°C with storage at 65°C and boiler off
	[lt]	[m²]	[lt/min]	[lt]	[lt/min]	[lt]
500	99	1,1	2,5	10 lt/min: 198 lt 25 lt/min: 176 lt	1,57	10 lt/min: 148 lt 25 lt/min: 132 lt
600	146	1,3	3,0	10 lt/min: 239 lt 25 lt/min: 213 lt	1,86	10 lt/min: 179 lt 25 lt/min: 160 lt
800	191	1,6	3,5	10 lt/min: 320 lt 25 lt/min: 280 lt	2,17	10 lt/min: 240 lt 25 lt/min: 210 lt

LOWER HEAT EXCHANGER POWER COMBI 2 - COMBI 3

Output of the Combi 2 - Combi 3 lower heat exchangers depending on the average DeltaT between primary and accumulation considering flow rate 3 m³/h.

Thermal output is given in both kW or kcal/h in terms of average temperature difference between primary and secondary circuit, all for a range of primary 3 m³/h.
For example, a 1000 liters COMBI 2 with a water flow of 3 m³/h at 80 °C inlet and outlet at 70 °C, has on the storage of water an average temperature of 60 °C, the main difference of temperature will be:
(80 +70) / 20-60 = 15 °C and therefore you can exchange up to approximately 32 kW.

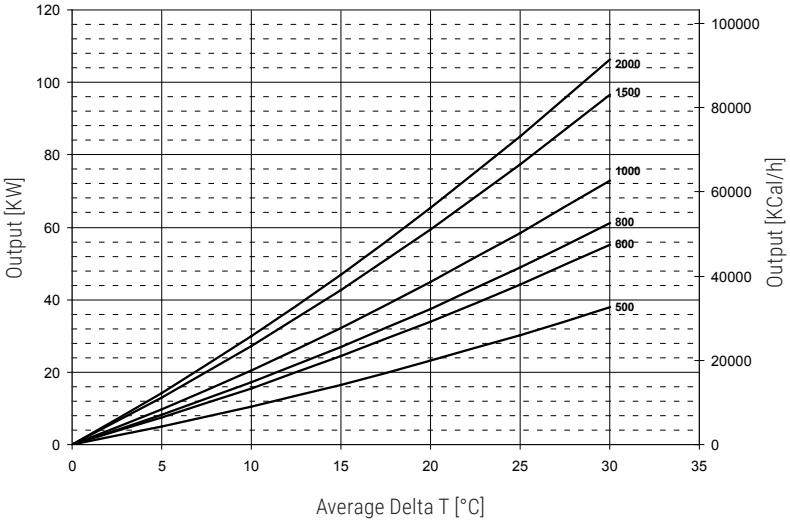

UPPER HEAT EXCHANGER POWER COMBI 3

Output of the Combi 3 upper heat exchangers depending on the average DeltaT between primary and accumulation considering flow rate 3 m³/h.

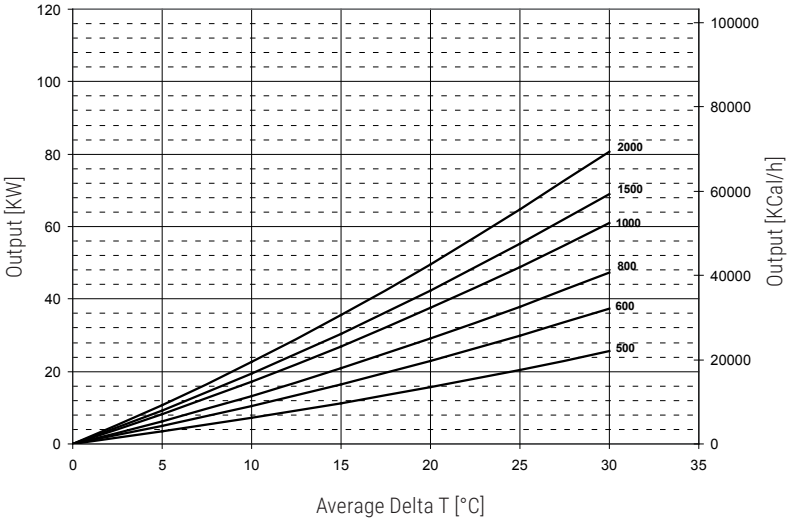

COMBI

D.H.W. STORAGE PERFORMANCES



Model	DHW Volume	DHW exchanger surface	COMPLETE HEATED STORAGE VOLUME		UPPER PART HEATED STORAGE VOLUME	
			Max sanitary water produced from 10°C to 45°C with storage at 65°C and boiler on	Max sanitary water produced from 10°C to 45°C with storage at 65°C and boiler off	Max sanitary water produced from 10°C to 45°C with storage at 65°C and boiler on	Max sanitary water produced from 10°C to 45°C with storage at 65°C and boiler off
	[lt]	[m²]	[lt/min]	[lt]	[lt/min]	[lt]
1000	226	1,8	4,1	10 lt/min: 389 lt 25 lt/min: 330 lt	2,26	10 lt/min: 291 lt 25 lt/min: 250 lt
1500	412	2,5	5,6	10 lt/min: 753 lt 25 lt/min: 614 lt	3,36	10 lt/min: 565 lt 25 lt/min: 461 lt
2000	566	3,1	6,8	10 lt/min: 1083 lt 25 lt/min: 852 lt	4,08	10 lt/min: 812 lt 25 lt/min: 639 lt

LOWER HEAT EXCHANGER PRESSURE LOSS COMBI 2 - COMBI 3

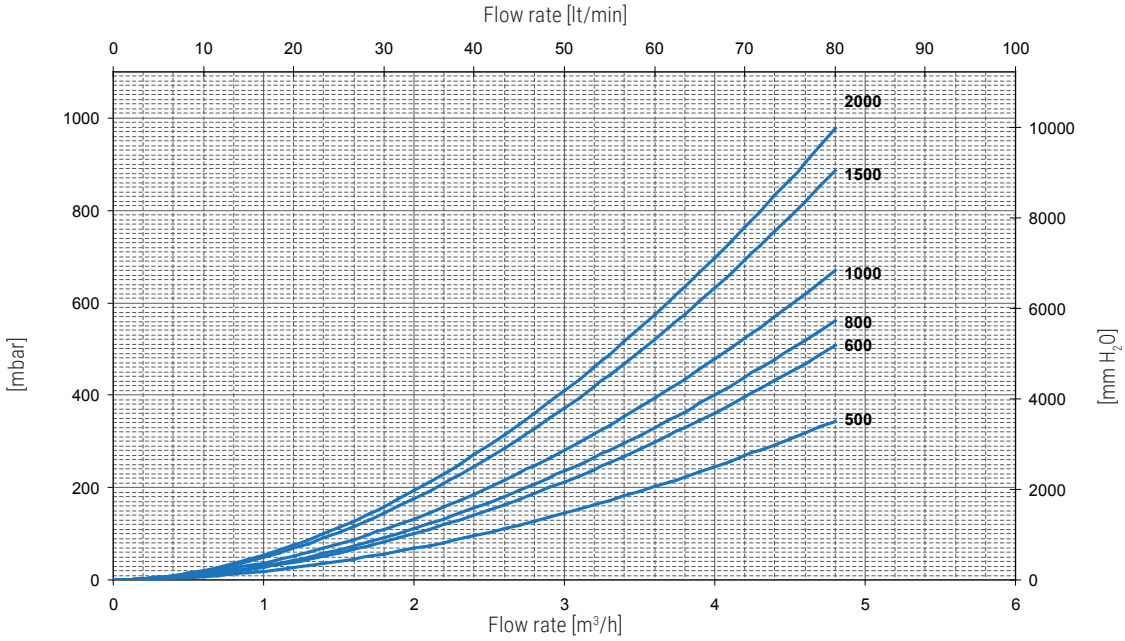

UPPER HEAT EXCHANGER PRESSURE LOSS COMBI 3

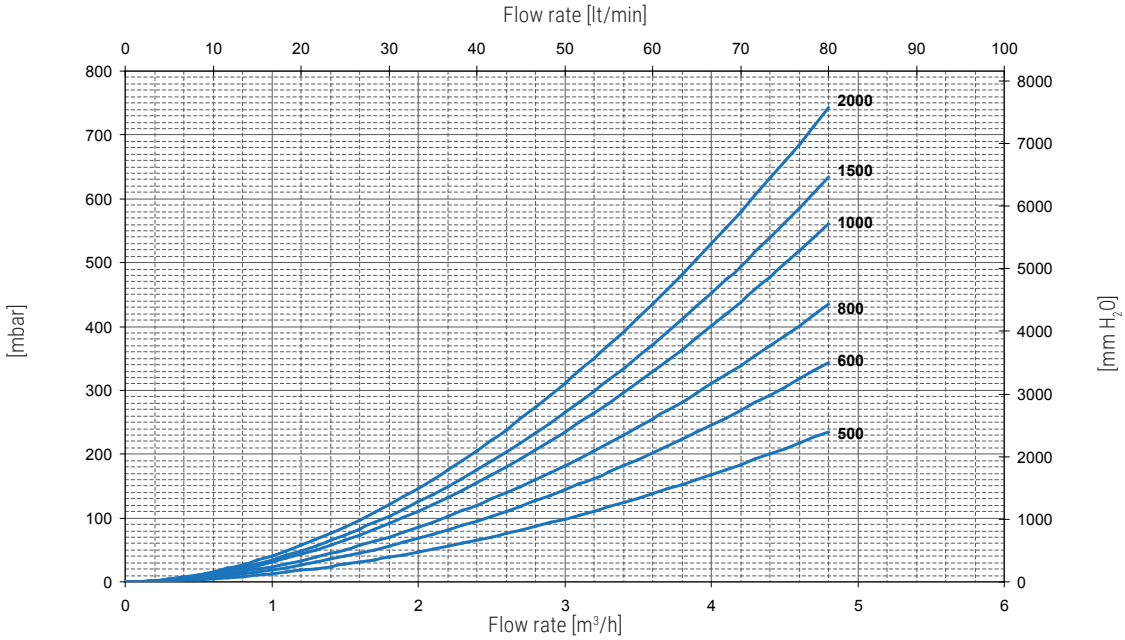

ECO-COMBI **1**

MULTI-HEAT ENERGY BUFFER WITH STAINLESS STEEL 316L D.H.W. CORRUGATED COIL



APPLICATION
Heating hot water storage and rapid D.H.W. production.
MATERIAL
- BUFFER TANK: Mild steel construction with exterior paint. No anti-corrosion treatment required due to the buffer's closed circuit system.
- D.H.W. STORAGE : Stainless steel 316L corrugated coil, suitable for D.H.W. according to D. M. n. 174 dated 06.04.04

TECHNICAL DESCRIPTION
- Heating system with a biomass generator as energy source, combining the possibility to produce hot water for sanitary use. In such case , storage heating volume allows the generator to regularly work , limiting number of stops due to the inadequate energy request of the heating system. Moreover, it limits the emission of smoke and the creation of corrosive condensate (smoke side).
- Domestic hot water production system for domestic and sanitary use where heating water is stored. In this system, the high potentiality of the Eco Combi allows to obtain a good production of hot sanitary water even if temperatures of the primary system are not so high (i.e using heat pumps as primary source and solar source as support)

The particular shape of the corrugated coil is avoiding any problem relating to the storage of sanitary hot water and ensure high heat exchange performances.

INSULATION
- HARD: High thermal insulation with ecological polyurethane hard foam.
- SOFT: NOFIRE® polyester fleece 100% made of recyclable material, with high thermal insulation. Fire resistance class B-s2d0 according to EN 13501.

Grey PVC external lining, complete with top and flange cover.
WARRANTY
5 years - See general sales conditions and warranty
ACCESSORIES AND SPARE PARTS
See Accessories section for the entire list.

316L STAINLESS STEEL DH.W. CORRUGATED COIL

STOCK AVAILABILITY



cordivari.com/erp

On line ErP label tool

ECO-COMBI 1 VB

316L STAINLESS STEEL CORRUGATED COIL FOR D.H.W. PRODUCTION

Model	HARD FOAM insulation	Volume	Surface	ENERGY EFFICIENCY CLASS
	Art. Nr.	[lt]	[m²]	
500	3270162316010	26,6	4,5	**C**
600	3270162316011	31,0	5,3	**C**
800	3270162316012	33,4	5,8	**B**
1000	3270162316013	45,5	7,8	**C**
1250	3270162316014	45,5	7,8	**B**
1500	3270162316015	55,3	9,5	**C**
2000	3270162316016	72,2	12,3	**B**

ECO-COMBI 1 VC

316L STAINLESS STEEL CORRUGATED COIL FOR D.H.W. PRODUCTION

Model	DISMOUNTABLE SOFT FLEECE insulation	Volume	Surface	ENERGY EFFICIENCY CLASS
	Art. Nr.	[lt]	[m²]	
800	3270162282262	33,4	5,8	**C**
1000	3270162282263	45,5	7,8	**C**
1250	3270162282264	45,5	7,8	**C**
1500	3270162282265	55,3	9,5	**C**
2000	3270162282266	72,2	12,3	**C**

ACCESSORIES

THREEPHASE and MONOPHASE Electric immersion heaters




Available kit:	
[Kw]	Tension [V]
da **1,5** a **3**	220 - MONOPHASE
da **4** a **9**	400 - THREEPHASE
See accessories	

Thermometer

Art. Nr.
5032240000107
5 units box



Buffer tanks connecting kit

Art. Nr.	Connection
5006170001001	1" 1/2
Stainless steel extensible connecting kit - (200 ÷ 400 mm)	



P.E.D. product designed and produced in conformity to the article 4.3 of directive 2014/68/UE - ErP Ecodesgin directive 2009/125/CE

ECO-COMBI **1**

MULTI-HEAT ENERGY BUFFER WITH STAINLESS STEEL 316L D.H.W. CORRUGATED COIL

STORAGE		CORRUGATED DHW STAINLESS STEEL COIL
Pmax	Tmax	Pmax
3 bar	99 °C	6 bar

CORDIVARI Lab

TÜV Rheinland Energie und Umwelt GmbH states that test procedures and Cordivari LAB are certified conforming to European standard EN 15332, as indicated by Ecodesign ErP Directive.

TESTED ErP

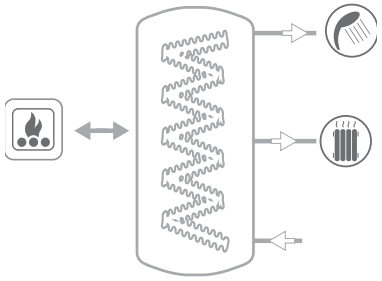

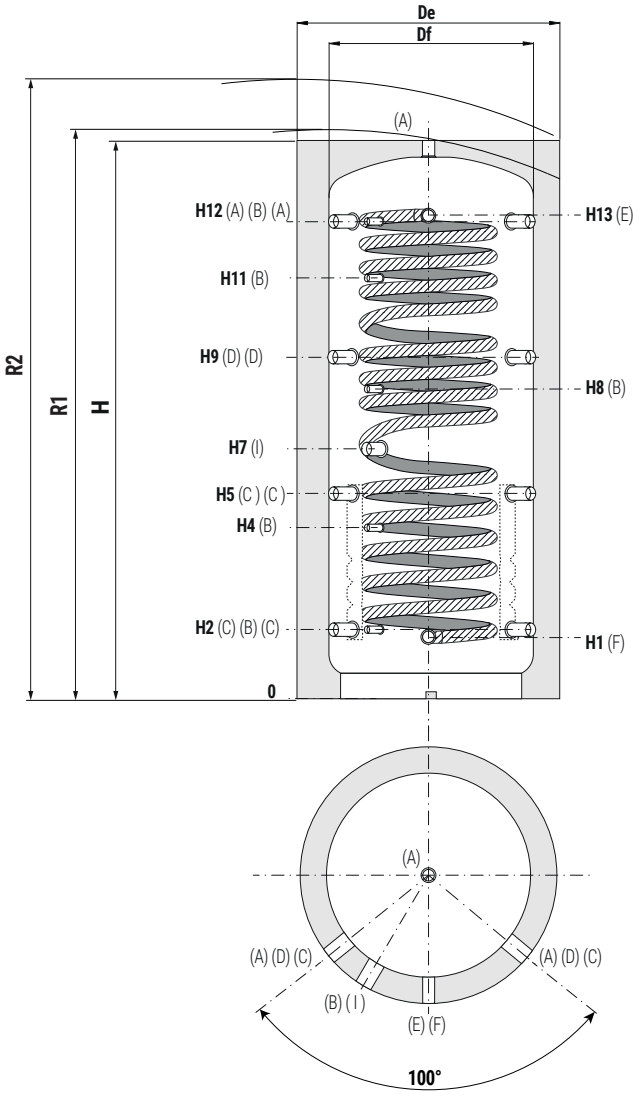

A	Heating delivery/From generator/air purge 1"1/2 F
B	Probe 1/2" F
C	Heating return/to generator
D	Heating delivery/From generator 1"1/2 F
E	Domestic hot water circuit outlet 1" .
F	Domestic cold water circuit inlet 1" M.
G	Heat exchanger inlet 1" F
H	Heat exchanger outlet 1" F
I	Connection for electric immersion heater 1"1/2 F

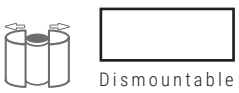

ECO-COMBI 1 VB - HARD FOAM INSULATION

Model	Volume	Df	De	H	R1	R2	H1	H2	H4	H5	H7	H8	H9	H11	H12	H13
	[lt]								[mm]							
500	478	//	750	1620	//	1800	230	247	533	629	841	930	1011	1231	1343	1360
600	560	//	750	1870	//	2025	230	247	582	695	915	1060	1144	1382	1593	1610
800	803	790	940	1840	1895	2070	248	265	584	690	823	988	1115	1332	1541	1558
1000	944	790	940	2130	2180	2340	248	265	656	787	998	1188	1309	1588	1831	1843
1250	1248	//	1100	2202	//	2475	296	313	705	835	986	1068	1357	1586	1879	1896
1500	1432	//	1100	2250	//	2505	296	313	736	845	1061	1286	1377	1653	1909	1921
2000	1970	//	1300	2320	//	2670	330	347	770	879	1060	1300	1411	1687	1943	1955

ECO-COMBI 1 VC - DISMOUNTABLE SOFT FLEECE INSULATION

Model	Volume	Df	De	H	R1	R2	H1	H2	H4	H5	H7	H8	H9	H11	H12	H13
	[lt]								[mm]							
800	803	790	1010	1840	1895	2100	248	265	584	690	823	988	1115	1332	1541	1558
1000	944	790	1010	2130	2180	2370	248	265	656	787	998	1188	1309	1588	1831	1843
1250	1248	900	1120	2202	2262	2475	296	313	705	835	986	1068	1357	1586	1879	1896
1500	1432	950	1210	2250	2315	2565	296	313	736	845	1061	1286	1377	1653	1909	1921
2000	1970	1100	1360	2320	2400	2700	330	347	770	879	1060	1300	1411	1687	1943	1955

P.E.D. product designed and produced in conformity to the article 4.3 of directive 2014/68/UE - ErP Ecodesgin directive 2009/125/CE

ECO-COMBI **2**

MULTI-HEAT ENERGY BUFFER WITH STAINLESS STEEL 316L D.H.W. CORRUGATED COIL AND 1 FIXED HEAT EXCHANGER



APPLICATION
Heating hot water storage and rapid D.H.W. production.
MATERIAL
- BUFFER TANK: Mild steel construction with exterior paint. No anti-corrosion treatment required due to the buffer's closed circuit system.
- D.H.W. STORAGE : Stainless steel 316L corrugated coil, suitable for D.H.W. according to D. M. n. 174 dated 06.04.04

HEAT EXCHANGER
N° 1 fixed heat exchanger.
TECHNICAL DESCRIPTION
Multi-Heat Energy tanks EcoCombi 2 are used in units with a typically discontinuous energy source for double use: heating system and sanitary hot water system.
- Heating system with a biomass generator as energy source, combining the possibility to produce hot water for sanitary use. In such case , storage heating volume allows the generator to regularly work , limiting number of stops due to the inadequate energy request of the heating system. Moreover, it limits the emission of smoke and the creation of corrosive condensate (smoke side).
- Domestic hot water production system for domestic and sanitary use where heating water is stored. In this system , the high potentiality of the Eco Combi allows to obtain a good production of hot sanitary water even if temperatures of the primary system are not so high (i.e using heat pumps as primary source and solar source as support).

The particular shape of the corrugated coil is avoiding any problem relating to the storage of sanitary hot water and ensure high heat exchange performances.
INSULATION
- HARD: High thermal insulation with ecological polyurethane hard foam.
- SOFT: NOFIRE® polyester fleece 100% made of recyclable material, with high thermal insulation. Fire resistance class B-s2d0 according to EN 13501. Grey PVC external lining.

WARRANTY
5 years - See general sales conditions and warranty
ACCESSORIES AND SPARE PARTS
See Accessories section for the entire list.

316L STAINLESS STEEL DH.W. CORRUGATED COIL

STOCK AVAILABILITY



cordivari.com/erp



On line ErP label tool

ECO-COMBI 2 VB

Model	HARD FOAM insulation	316L STAINLESS STEEL CORRUGATED COIL FOR D.H.W. PRODUCTION Volume	Surface	LOWER HEAT EXCHANGER Volume	Surface	ENERGY EFFICIENCY CLASS
	Art. Nr.	[lt]	[m²]	[lt]	[m²]	
500	3270162316101	26,6	4,5	11,5	1,9	**C**
600	3270162316102	31,0	5,3	13	2,1	**C**
800	3270162316103	33,4	5,8	16,3	2,5	**B**
1000	3270162316104	45,5	7,8	20,7	3,1	**C**
1250	3270162316105	45,5	7,8	22,3	3,4	**B**
1500	3270162316106	55,3	9,5	25,3	3,8	**C**
2000	3270162316107	72,2	12,3	29,6	4,6	**B**

ECO-COMBI 2 VC

Model	DISMOUNTABLE SOFT FLEECE insulation	316L STAINLESS STEEL CORRUGATED COIL FOR D.H.W. PRODUCTION Volume	Surface	LOWER HEAT EXCHANGER Volume	Surface	ENERGY EFFICIENCY CLASS
	Art. Nr.	[lt]	[m²]	[lt]	[m²]	
800	3270162282272	33,4	5,8	16,3	2,5	**C**
1000	3270162282273	45,5	7,8	20,7	3,1	**C**
1250	3270162282274	45,5	7,8	22,3	3,4	**C**
1500	3270162282275	55,3	9,5	25,3	3,8	**C**
2000	3270162282276	72,2	12,3	29,6	4,6	**C**

ACCESSORIES

THREEPHASE and MONOPHASE Electric immersion heaters




Available kit:	
[Kw]	Tension [V]
da **1,5** a **3**	220 - MONOPHASE
da **4** a **9**	400 - THREEPHASE
See accessories	

Thermometer

Art. Nr.
5032240000107
5 units box



Buffer tanks connecting kit

Art. Nr.	Connection
5006170001001	1" 1/2
Stainless steel extensible connecting kit - (200 ÷ 400 mm)	



P.E.D. product designed and produced in conformity to the article 4.3 of directive 2014/68/UE - ErP Ecodesgin directive 2009/125/CE

ECO-COMBI **2**

MULTI-HEAT ENERGY BUFFER WITH STAINLESS STEEL 316L D.H.W. CORRUGATED COIL AND 1 FIXED HEAT EXCHANGER

STORAGE	CORRUGATED DHW STAINLESS STEEL COIL	FIXED HEAT EXCHANGER	
Pmax Tmax	Pmax	Pmax	Tmax
3 bar 99 °C	6 bar	12 bar	110 °C

CORDIVARI Lab

TÜV Rheinland Energie und Umwelt GmbH states that test procedures and Cordivari LAB are certified conforming to European standard EN 15332, as indicated by Ecodesign ErP Directive.

TESTED ErP

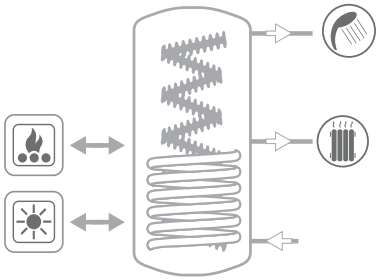

See TECHNICAL SUPPORT chapter for example of installation

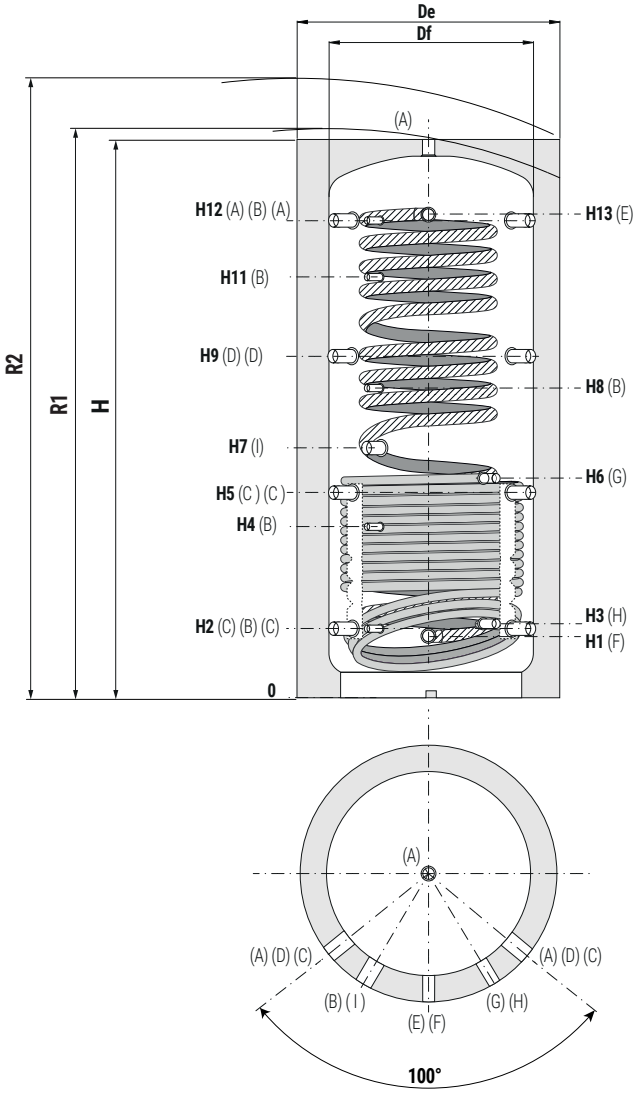

A	Heating delivery/From generator/air purge 1"1/2 F
B	Probe 1/2" F
C	Heating return/to generator
D	Heating delivery/From generator 1"1/2 F
E	Domestic hot water circuit outlet 1" .
F	Domestic cold water circuit inlet 1" M.
G	Heat exchanger inlet 1" F
H	Heat exchanger outlet 1" F
I	Connection for electric immersion heater 1"1/2 F



Dismountable insulation

ECO-COMBI 2 VB - HARD FOAM INSULATION

Model	Volume	Df	De	H	R1	R2	H1	H2	H3	H4	H5	H6	H7	H8	H9	H11	H12	H13
	[lt]	[mm]																
500	478	//	750	1620	//	1800	230	247	260	533	629	744	841	930	1011	1231	1343	1360
600	560	//	750	1870	//	2025	230	247	260	582	695	855	915	1060	1144	1382	1593	1610
800	803	790	940	1840	1895	2070	248	265	278	584	690	762	823	988	1115	1332	1541	1558
1000	944	790	940	2130	2180	2340	248	265	284	656	787	953	998	1188	1309	1588	1831	1843
1250	1248	//	1100	2202	//	2475	296	313	326	705	835	884	986	1068	1357	1586	1879	1896
1500	1432	//	1100	2250	//	2505	296	313	336	736	845	1006	1061	1286	1377	1653	1909	1921
2000	1970	//	1300	2320	//	2670	330	347	370	770	879	1001	1060	1300	1411	1687	1943	1955

ECO-COMBI 2 VC - DISMOUNTABLE SOFT FLEECE INSULATION

Model	Volume	Df	De	H	R1	R2	H1	H2	H3	H4	H5	H6	H7	H8	H9	H11	H12	H13
	[lt]	[mm]																
800	803	790	1010	1840	1895	2100	248	265	278	584	690	762	823	988	1115	1332	1541	1558
1000	944	790	1010	2130	2180	2370	248	265	284	656	787	953	998	1188	1309	1588	1831	1843
1250	1248	900	1120	2202	2262	2475	296	313	326	705	835	884	986	1068	1357	1586	1879	1896
1500	1432	950	1210	2250	2315	2565	296	313	336	736	845	1006	1061	1286	1377	1653	1909	1921
2000	1970	1100	1360	2320	2400	2700	330	347	370	770	879	1001	1060	1300	1411	1687	1943	1955

P.E.D. product designed and produced in conformity to the article 4.3 of directive 2014/68/UE - ErP Ecodesgin directive 2009/125/CE

ECO-COMBI **3**

MULTI-HEAT ENERGY BUFFER WITH STAINLESS STEEL 316L D.H.W. CORRUGATED COIL AND 2 FIXED HEAT EXCHANGERS



APPLICATION
Heating hot water storage and rapid D.H.W. production.
MATERIAL
- BUFFER TANK: Mild steel construction with exterior paint. No anti-corrosion treatment required due to the buffer's closed circuit system.
- D.H.W. STORAGE : Stainless steel 316L corrugated coil, suitable for D.H.W. according to D. M. n. 174 dated 06.04.04

HEAT EXCHANGER
N° 2 fixed heat exchangers.
TECHNICAL DESCRIPTION
Multi-Heat Energy tanks EcoCombi 3 are used in units with a typically discontinuous energy source for double use: heating system and sanitary hot water system .
- Heating system with a biomass generator as energy source, combining the possibility to produce hot water for sanitary use. In such case , storage heating volume allows the generator to regularly work , limiting number of stops due to the inadequate energy request of the heating system. Moreover, it limits the emission of smoke and the creation of corrosive condensate (smoke side).
- Domestic hot water production system for domestic and sanitary use where heating water is stored. In this system , the high potentiality of the Eco Combi allows to obtain a good production of hot sanitary water even if temperatures of the primary system are not so high (i.e using heat pumps as primary source and solar source as support)

The particular shape of the corrugated coil is avoiding any problem relating to the storage of sanitary hot water and ensure high heat exchange performances.
INSULATION
- HARD: High thermal insulation with ecological polyurethane hard foam.
- SOFT: NOFIRE® polyester fleece 100% made of recyclable material, with high thermal insulation. Fire resistance class B-s2d0 according to EN 13501. Grey PVC external lining.

WARRANTY
5 years - See general sales conditions and warranty
ACCESSORIES AND SPARE PARTS
See Accessories section for the entire list.

316L STAINLESS STEEL DH.W. CORRUGATED COIL

STOCK AVAILABILITY



cordivari.com/erp



On line ErP label tool

ECO-COMBI 3 VB

Model	HARD FOAM insulation	316L STAINLESS STEEL CORRUGATED COIL FOR D.H.W. PRODUCTION		UPPER HEAT EXCHANGER		LOWER HEAT EXCHANGER		ENERGY EFFICIENCY CLASS
	Art. Nr.	Volume [lt]	Surface [m²]	Volume [lt]	Surface [m²]	Volume [lt]	Surface [m²]	ErP
500	3270162316201	26,6	4,5	8	1,3	11,5	1,9	**C**
600	3270162316202	31,0	5,3	8	1,3	13	2,1	**C**
800	3270162316203	33,4	5,8	11,8	1,8	16,3	2,5	**B**
1000	3270162316204	45,5	7,8	16,3	2,5	20,7	3,1	**C**
1250	3270162316205	45,5	7,8	16,3	2,5	22,3	3,4	**B**
1500	3270162316206	55,3	9,5	16,8	2,8	25,3	3,8	**C**
2000	3270162316207	72,2	12,3	19,1	2,8	29,6	4,6	**B**

ECO-COMBI 3 VC

Model	DISMOUNTABLE SOFT FLEECE insulation	316L STAINLESS STEEL CORRUGATED COIL FOR D.H.W. PRODUCTION		UPPER HEAT EXCHANGER		LOWER HEAT EXCHANGER		ENERGY EFFICIENCY CLASS
	Art. Nr.	Volume [lt]	Surface [m²]	Volume [lt]	Surface [m²]	Volume [lt]	Surface [m²]	ErP
800	3270162282282	33,4	5,8	11,8	1,8	16,3	2,5	**C**
1000	3270162282283	45,5	7,8	16,3	2,5	20,7	3,1	**C**
1250	3270162282284	45,5	7,8	16,3	2,5	22,3	3,4	**C**
1500	3270162282285	55,3	9,5	16,8	2,8	25,3	3,8	**C**
2000	3270162282286	72,2	12,3	19,1	2,8	29,6	4,6	**C**

ACCESSORIES

THREEPHASE and MONOPHASE Electric immersion heaters




Available kit:	
[Kw]	Tension [V]
da **1,5** a **3**	220 - MONOPHASE
da **4** a **9**	400 - THREEPHASE
See accessories	

Thermometer

Art. Nr.
5032240000107
5 units box



Buffer tanks connecting kit

Art. Nr.	Connection
5006170001001	1" 1/2
Stainless steel extensible connecting kit - (200 ÷ 400 mm)	



P.E.D. product designed and produced in conformity to the article 4.3 of directive 2014/68/UE - ErP Ecodesgin directive 2009/125/CE

ECO-COMBI **3**

MULTI-HEAT ENERGY BUFFER WITH STAINLESS STEEL 316L D.H.W. CORRUGATED COIL AND 2 FIXED HEAT EXCHANGERS

STORAGE	CORRUGATED DHW STAINLESS STEEL COIL		FIXED HEAT EXCHANGER	
Pmax	Tmax	Pmax	Pmax	Tmax
3 bar	99 °C	6 bar	12 bar	110 °C

CORDIVARI Lab

TÜV Rheinland Energie und Umwelt GmbH states that test procedures and Cordivari LAB are certified conforming to European standard EN 15332, as indicated by Ecodesign ErP Directive.

TESTED ErP

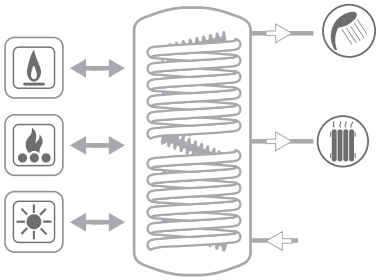

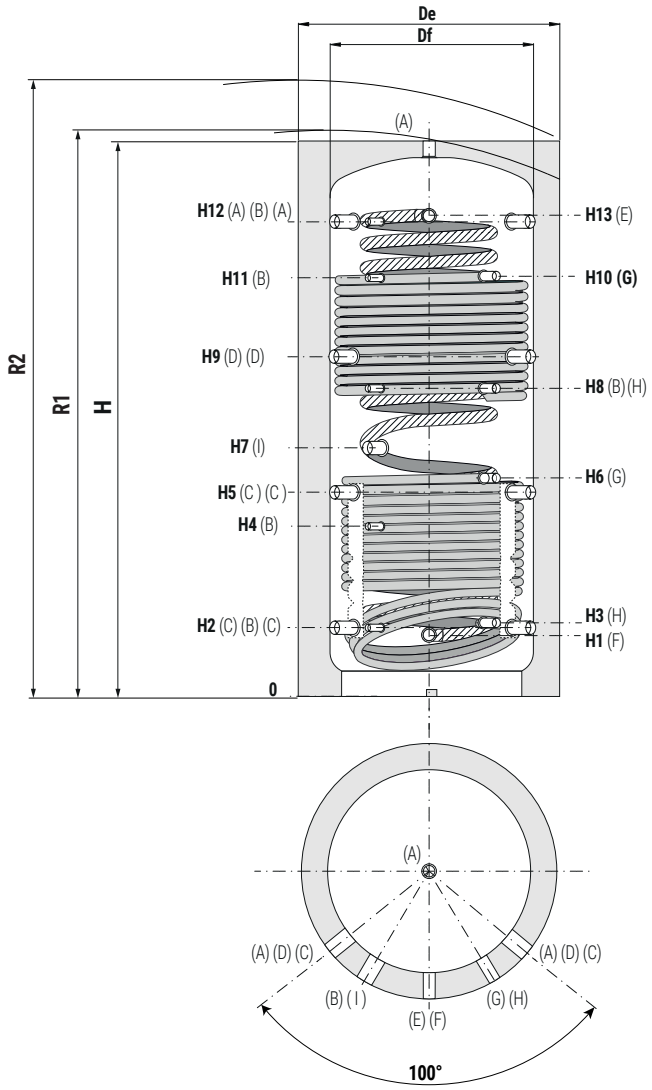

A	Heating delivery/From generator/air purge 1"1/2 F
B	Probe 1/2" F
C	Heating return/to generator
D	Heating delivery/From generator 1"1/2 F
E	Domestic hot water circuit outlet 1" .
F	Domestic cold water circuit inlet 1" M.
G	Heat exchanger inlet 1" F
H	Heat exchanger outlet 1" F
I	Connection for electric immersion heater 1"1/2 F

Dismountable insulation

ECO-COMBI 3 VB - HARD FOAM INSULATION

Model	Volume	Df	De	H	R1	R2	H1	H2	H3	H4	H5	H6	H7	H8	H9	H10	H11	H12	H13
	[lt]	[mm]																	
500	478	//	750	1620	//	1800	230	247	260	533	629	744	841	930	1011	1231	1231	1343	1360
600	560	//	750	1870	//	2025	230	247	260	582	695	855	915	1060	1144	1361	1382	1593	1610
800	803	790	940	1840	1895	2070	248	265	278	584	690	762	823	988	1115	1332	1332	1541	1558
1000	944	790	940	2130	2180	2340	248	265	284	656	787	953	998	1188	1309	1661	1588	1831	1843
1250	1248	//	1100	2202	//	2475	296	313	326	705	835	884	986	1068	1357	1641	1586	1879	1896
1500	1432	//	1100	2250	//	2505	296	313	336	736	845	1006	1061	1286	1377	1673	1653	1909	1921
2000	1970	//	1300	2320	//	2670	330	347	370	770	879	1001	1060	1300	1411	1687	1687	1943	1955

ECO-COMBI 3 VC - DISMOUNTABLE SOFT FLEECE INSULATION

Model	Volume	Df	De	H	R1	R2	H1	H2	H3	H4	H5	H6	H7	H8	H9	H10	H11	H12	H13
	[lt]	[mm]																	
800	803	790	1010	1840	1895	2100	248	265	278	584	690	762	823	988	1115	1332	1332	1541	1558
1000	944	790	1010	2130	2180	2370	248	265	284	656	787	953	998	1188	1309	1661	1588	1831	1843
1250	1248	900	1120	2202	2262	2475	296	313	326	705	835	884	986	1068	1357	1641	1586	1879	1896
1500	1432	950	1210	2250	2315	2565	296	313	336	736	845	1006	1061	1286	1377	1673	1653	1909	1921
2000	1970	1100	1360	2320	2400	2700	330	347	370	770	879	1001	1060	1300	1411	1687	1687	1943	1955

P.E.D. product designed and produced in conformity to the article 4.3 of directive 2014/68/UE - ErP Ecodesgin directive 2009/125/CE

ECO-COMBI

CORRUGATED COIL - PERFORMANCES DURING DHW PRODUCTION PHASE





Model	DHW Volume	DHW exchanger surface	COMPLETE HEATED STORAGE VOLUME		UPPER PART HEATED STORAGE VOLUME	
			Max sanitary water produced from 10°C to 45°C with storage at 65°C and boiler on	Max sanitary water produced from 10°C to 45°C with storage at 65°C and boiler off	Max sanitary water produced from 10°C to 45°C with storage at 65°C and boiler on	Max sanitary water produced from 10°C to 45°C with storage at 65°C and boiler off
	[lt]	[m²]	[lt/min]	[lt]	[lt/min]	[lt]
500	26,6	4,5	29	10 lt/min: 354 lt 25 lt/min: 227 lt	15	10 lt/min: 102 lt 25 lt/min: 75 lt
600	31	5,3	34	10 lt/min: 400 lt 25 lt/min: 257 lt	18	10 lt/min: 115 lt 25 lt/min: 85 lt
800	33,4	5,8	37	10 lt/min: 587 lt 25 lt/min: 377 lt	23	10 lt/min: 218 lt 25 lt/min: 160 lt

LOWER HEAT EXCHANGER POWER - ECO COMBI 2 - ECO COMBI 3

Output of the EcoCombi 2 - EcoCombi 3 lower heat exchangers depending on the average DeltaT between primary and accumulation considering flow rate 3 m³/h.

Thermal output is given in both kW or kcal/h in terms of average temperature difference between primary and secondary circuit, all for a range of primary 3 m³/h.
For example, a 1000 liters ECOCOMBI 2 with a water flow of 3 m³/h at 80 °C inlet and outlet at 70 °C, has on the storage of water an average temperature of 60 °C, the main difference of temperature will be:
(80 +70) / 20-60 = 15 °C and therefore you can exchange up to approximately 32 kW.

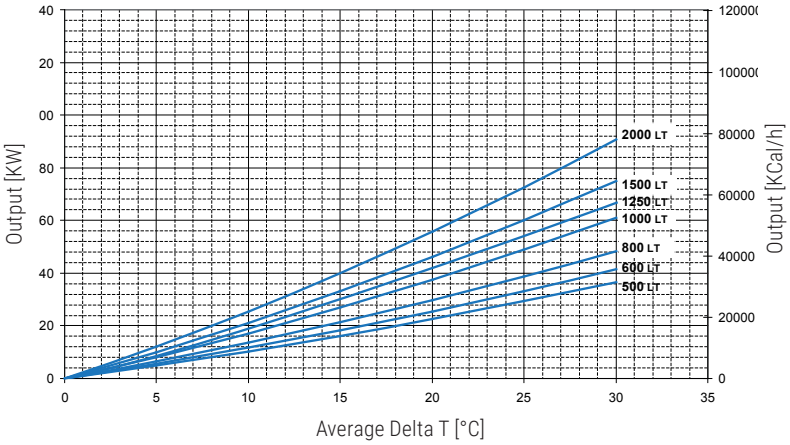

UPPER HEAT EXCHANGER POWER - ECO COMBI 3

Output of the EcoCombi 3 upper heat exchangers depending on the average DeltaT between primary and accumulation considering flow rate 3 m³/h.

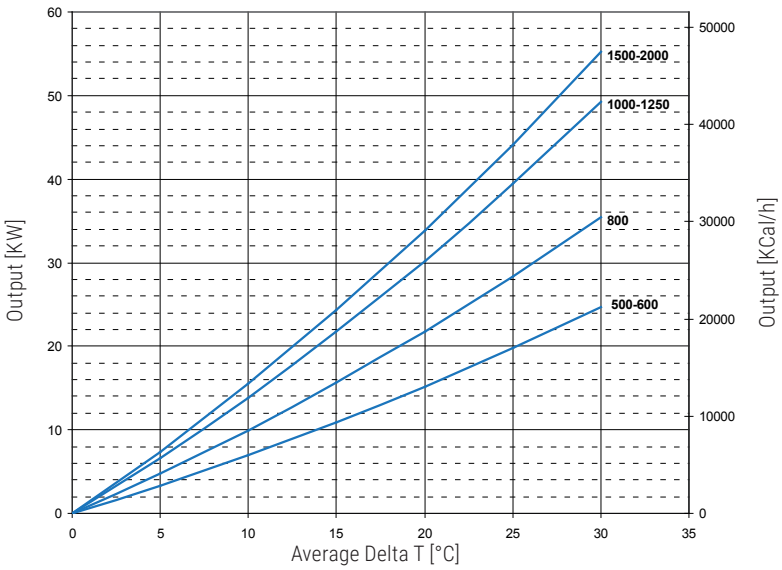

ECO-COMBI

CORRUGATED COIL - PERFORMANCES DURING DHW PRODUCTION PHASE





Model	DHW Volume	DHW exchanger surface	COMPLETE HEATED STORAGE VOLUME		UPPER PART HEATED STORAGE VOLUME	
			Max sanitary water produced from 10°C to 45°C with storage at 65°C and boiler on	Max sanitary water produced from 10°C to 45°C with storage at 65°C and boiler off	Max sanitary water produced from 10°C to 45°C with storage at 65°C and boiler on	Max sanitary water produced from 10°C to 45°C with storage at 65°C and boiler off
	[lt]	[m²]	[lt/min]	[lt]	[lt/min]	[lt]
1000	45,5	7,8	50	10 lt/min: 800 lt 25 lt/min: 541 lt	27	10 lt/min: 294 lt 25 lt/min: 216 lt
1250	45,5	7,8	50	10 lt/min: 922 lt 25 lt/min: 592 lt	27	10 lt/min: 310 lt 25 lt/min: 230 lt
1500	55,3	9,5	57	10 lt/min: 1144 lt 25 lt/min: 735 lt	34	10 lt/min: 345 lt 25 lt/min: 258 lt
2000	72,2	12,3	74	10 lt/min: 1657 lt 25 lt/min: 1142 lt	44	10 lt/min: 463 lt 25 lt/min: 340 lt

LOWER HEAT EXCHANGER PRESSURE LOSS - ECO COMBI 2 - ECO COMBI 3

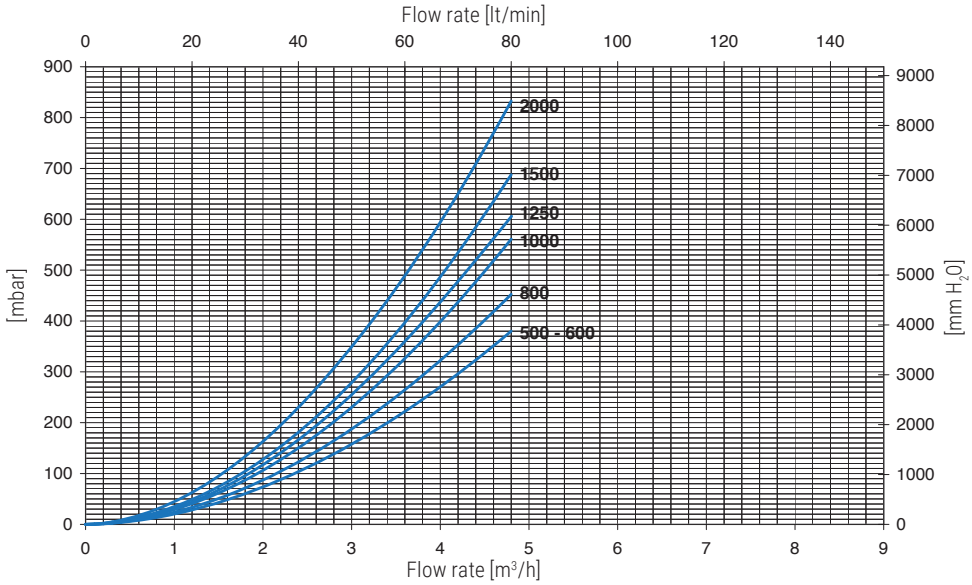

UPPER HEAT EXCHANGER PRESSURE LOSS - ECO COMBI 3

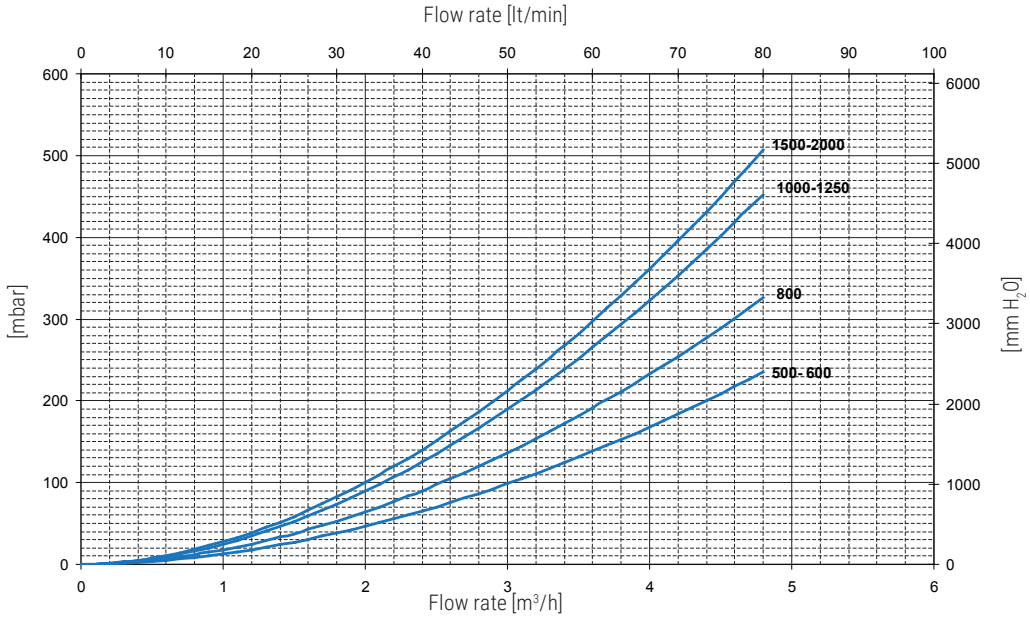

ECO-COMBI **1 DOMUS**

MULTI-HEAT ENERGY BUFFER WITH STAINLESS STEEL 316L D.H.W. CORRUGATED COIL



APPLICATION
Heating hot water storage and rapid D.H.W. production.
MATERIAL
- BUFFER TANK: Mild steel construction with exterior paint. No anti-corrosion treatment required due to the buffer's closed circuit system.
- D.H.W. STORAGE : Stainless steel 316L corrugated coil, suitable for D.H.W. according to D. M. n. 174 dated 06.04.04

TECHNICAL DESCRIPTION
Multi-Heat Energy tanks EcoCombi 1 Domus are used in units with a typically discontinuous energy source for double use: heating system and domestic hot water systems.
- Heating system with a biomass generator as energy source, combining the possibility to produce hot water for sanitary use. In such case, storage heating volume allows the generator to regularly work, limiting number of stops due to the inadequate energy request of the heating systems. Moreover, it limits the emission of smoke and the creation of corrosive condensate (smoke side).
- Domestic hot water production system for domestic and sanitary use where heating water is stored. In this system , the high potentiality of the Eco Combi allows to obtain a good production of hot sanitary water even if temperatures of the primary system are not so high (i.e using heat pumps as primary source and solar source as support).

The particular shape of the corrugated pipe avoids any problem relating to the storage of sanitary hot water and ensures high heat exchange performances.
INSULATION
High thermal insulation with ecological hard polyurethane foam. Grey PVC external lining complete with top cover.
WARRANTY
5 years - See general sales conditions and warranty
ACCESSORIES AND SPARE PARTS
See Accessories section for the entire list.

316L STAINLESS STEEL DH.W. CORRUGATED COIL

STOCK AVAILABILITY



cordivari.com/erp



On line ErP label tool

ECO-COMBI 1 DOMUS VB

316L STAINLESS STEEL CORRUGATED COIL FOR D.H.W. PRODUCTION

Model	**HARD FOAM** insulation	Volume	Surface	ENERGY EFFICIENCY CLASS
	Art. Nr.	[lt]	[m²]	ErP
200	3270162316021	2,9	1,4	**B**
300	3270162316022	5,1	2,5	**B**

Model	Max sanitary water produced from 10°C to 45°C with storage at 60°C	Max sanitary water produced from 10°C to 45°C with storage at 50°C
	[lt/min]	[lt/min]
200	11	8
300	23	16

ACCESSORIES

MONOPHASE Electric immersion heaters



Available kit:	
[Kw]	Tension [V]
da **1,5** a **3**	220 - MONOPHASE
See accessories	

Thermometer

Art. Nr.
5032240000107
5 units box



P.E.D. product designed and produced in conformity to the article 4.3 of directive 2014/68/UE - ErP Ecodesgin directive 2009/125/CE

ECO-COMBI **1 DOMUS**

MULTI-HEAT ENERGY BUFFER WITH STAINLESS STEEL 316L D.H.W. CORRUGATED COIL

STORAGE		CORRUGATED DHW STAINLESS STEEL COIL
Pmax	Tmax	Pmax
3 bar	99 °C	6 bar

CORDIVARI Lab

TÜV Rheinland Energie und Umwelt GmbH states that test procedures and Cordivari LAB are certified conforming to European standard EN 15332, as indicated by Ecodesign ErP Directive.

TESTED ErP

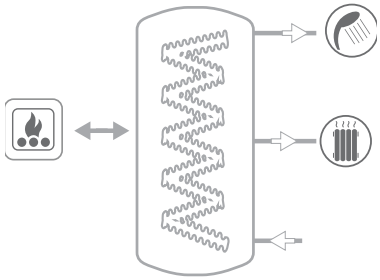

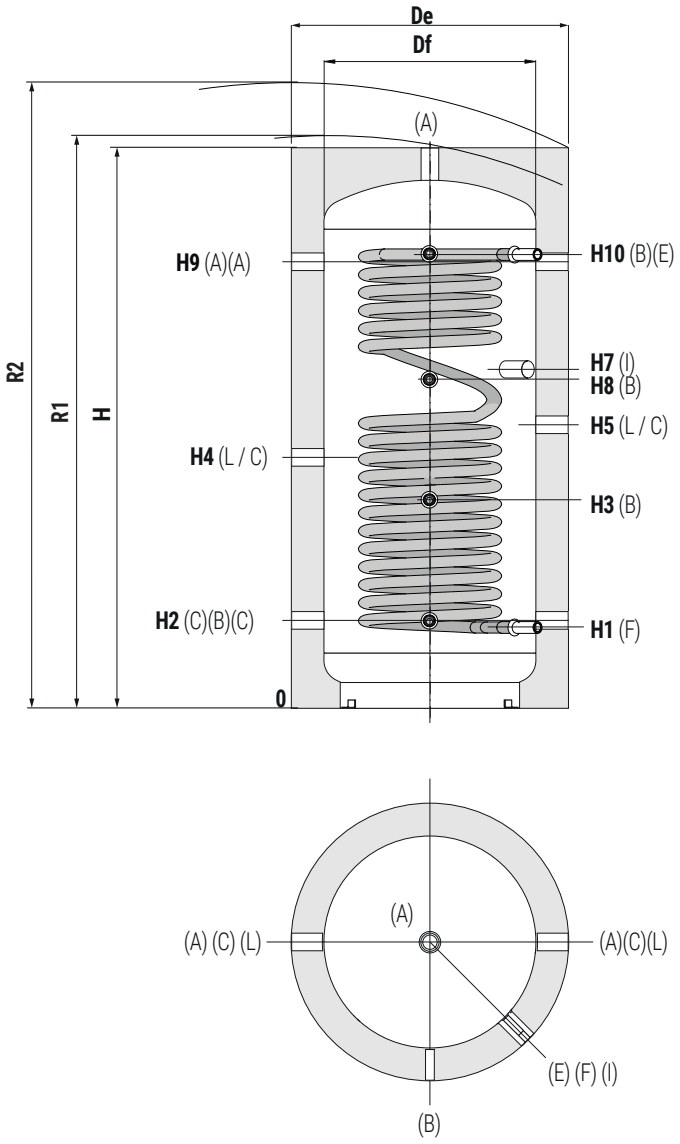

A	Heating delivery/From generator/air purge 1"1/2 F
B	Probe 1/2" F
C	Heating return/to generator
E	Domestic hot water circuit outlet 1"
F	Domestic cold water circuit inlet 1" M
I	Connection for electric immersion heater 1"1/2 F
L	Heating delivery 1"1/2 F

Model	Volume	DE	H	R2	H1	H2	H3	H4	H5	H7	H8	H9	H10
	[lt]	[mm]											
200	180	590	1310	1445	227	252	552	602	702	852	822	1052	1079
300	279	690	1360	1530	257	272	572	622	722	872	812	1072	1084

P.E.D. product designed and produced in conformity to the article 4.3 of directive 2014/68/UE - ErP Ecodesgin directive 2009/125/CE

ECO-COMBI **2 DOMUS**

MULTI-HEAT ENERGY BUFFER WITH STAINLESS STEEL 316L D.H.W. CORRUGATED COIL AND 1 FIXED HEAT EXCHANGER



APPLICATION
Heating hot water storage and rapid D.H.W. production.

MATERIAL
- BUFFER TANK: Mild steel construction with exterior paint. No anti-corrosion treatment required due to the buffer's closed circuit system.
- D.H.W. STORAGE : Stainless steel 316L corrugated coil, suitable for D.H.W. according to D. M. n. 174 dated 06.04.04

HEAT EXCHANGER
N° 1 fixed heat exchanger.

TECHNICAL DESCRIPTION
Multi-Heat Energy tanks EcoCombi 2 Domus are used in units with a typically discontinuous energy source for double use: heating system and domestic hot water systems.
- Heating system with a biomass generator as energy source, combining the possibility to produce hot water for sanitary use. In such case, storage heating volume allows the generator to regularly work, limiting number of stops due to the inadequate energy request of the heating systems. Moreover, it limits the emission of smoke and the creation of corrosive condensate (smoke side).
- Domestic hot water production system for domestic and sanitary use where heating water is stored. In this system , the high potentiality of the Eco Combi allows to obtain a good production of hot sanitary water even if temperatures of the primary system are not so high (i.e using heat pumps as primary source and solar source as support).

The particular shape of the corrugated pipe avoids any problem relating to the storage of sanitary hot water and ensures high heat exchange performances.

INSULATION
High thermal insulation with ecological hard polyurethane foam. Grey PVC external lining complete with top cover.

WARRANTY
5 years - See general sales conditions and warranty

ACCESSORIES AND SPARE PARTS
See Accessories section for the entire list.

316L STAINLESS STEEL DH.W. CORRUGATED COIL

STOCK AVAILABILITY



cordivari.com/erp



On line ErP label tool

ECO-COMBI 2 DOMUS VB

Model	**HARD FOAM** insulation	316L STAINLESS STEEL CORRUGATED COIL FOR D.H.W. PRODUCTION		HEAT EXCHANGER	ENERGY EFFICIENCY CLASS
	Art. Nr.	Volume [lt]	Surface [m²]	Surface [m²]	ErP
200	3270162282501	2,9	1,4	1	**B**
300	3270162282502	5,1	2,5	1,2	**B**

Model	Max solar collectors surface	Max sanitary water produced from 10°C to 45°C with storage at 60°C	Max sanitary water produced from 10°C to 45°C with storage at 50°C
	[m²]	[lt/min]	[lt/min]
200	5	11	8
300	7,5	23	16

ACCESSORIES

MONOPHASE Electric immersion heaters



Available kit:	
[Kw]	Tension [V]
da **1,5** a **3**	220 - MONOPHASE
See accessories	

Thermometer

Art. Nr.
5032240000107
5 units box



P.E.D. product designed and produced in conformity to the article 4.3 of directive 2014/68/UE - ErP Ecodesgin directive 2009/125/CE

ECO-COMBI **2 DOMUS**

MULTI-HEAT ENERGY BUFFER WITH STAINLESS STEEL 316L D.H.W. CORRUGATED COIL AND 1 FIXED HEAT EXCHANGER

STORAGE		CORRUGATED DHW STAINLESS STEEL COIL	FIXED HEAT EXCHANGER	
Pmax	Tmax	Pmax	Pmax	Tmax
3 bar	99 °C	6 bar	12 bar	110 °C

CORDIVARI Lab

TÜV Rheinland Energie und Umwelt GmbH states that test procedures and Cordivari LAB are certified conforming to European standard EN 15332, as indicated by Ecodesign ErP Directive.

TESTED ErP

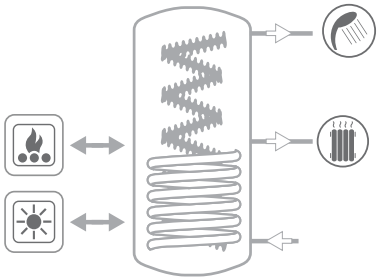

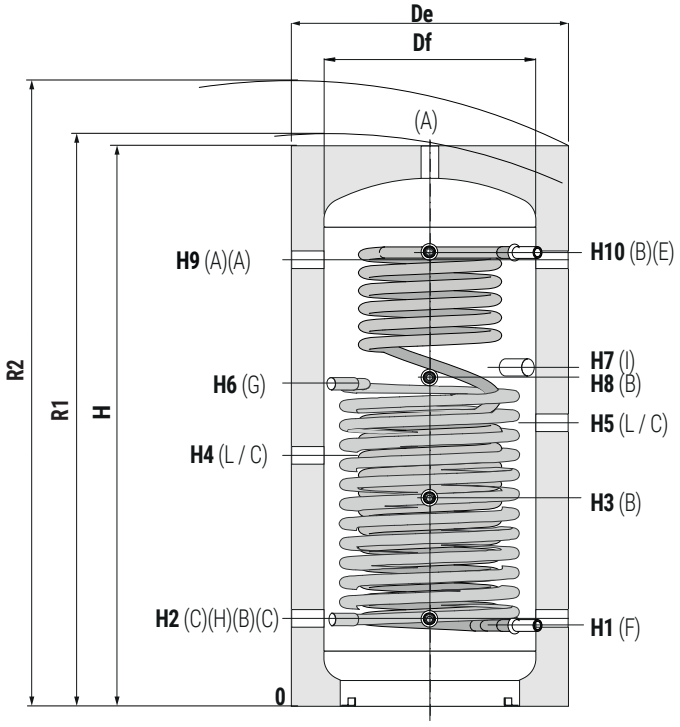

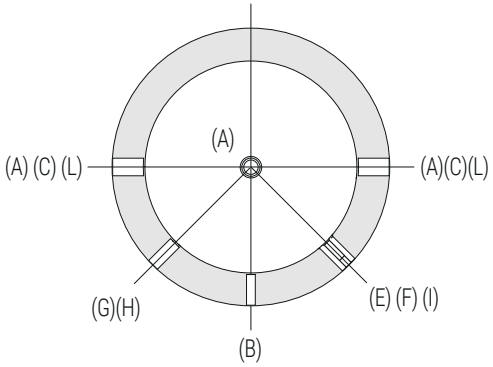

A	Heating delivery/From generator/air purge 1"1/2 F
B	Probe 1/2" F
C	Heating return/to generator
E	Domestic hot water circuit outlet 1"
F	Domestic cold water circuit inlet 1" M
G	Heat exchanger inlet 1" F
H	Heat exchanger outlet 1" F
I	Connection for electric immersion heater 1"1/2 F
L	Heating delivery 1"1/2 F

Model	Volume	DE	H	R2	H1	H2	H3	H4	H5	H6	H7	H8	H9	H10
	[lt]	[mm]												
200	180	590	1310	1445	227	252	552	602	702	822	852	822	1052	1079
300	279	690	1360	1530	257	272	572	622	722	812	872	812	1072	1084

P.E.D. product designed and produced in conformity to the article 4.3 of directive 2014/68/UE - ErP Ecodesgin directive 2009/125/CE

PUFFERMAS® 1

HEATING WATER BUFFER TANK WITH MACS® MODULE FOR IMMEDIATE D.H.W. PRODUCTION



APPLICATION
Storage of heating hot water and immediate production of D.H.W. high flow rate.

MATERIAL
Mild steel construction with exterior paint. No anti-corrosion treatment required due to the buffer's closed circuit system.

D.H.W. HEAT EXCHANGER
External MACS® module with Stainless steel 316L brazed plate exchanger for immediate D.H.W. production.

CIRCULATION PUMP
A pump is embedded in the MACS Module attached to the tank to allow the circulation of technical water through the plate heat exchanger, only when there is levy of DHW.
For Puffermas 70 KW -> Circulator speed: 700/4300 (min/max) n rpm; Power consumption: 1,8/43 (min/max) W; Current drawn 0,02/0,39 (min/max); Power supply 230V/1Ph/50Hz.
For Puffermas 120 KW -> Circulator speed: 700/4700 (min/max) n rpm; Power consumption: 1,8/50 (min/max) W; Current drawn 0,02/0,43 (min/max); Power supply 230V/1Ph/50Hz.

TECHNICAL DESCRIPTION
The immediate and fast production of D.H.W. granted by the MACS® module allows the following benefits:
- to reduce dimensions of the water heater needed
- easy maintenance
- maximum hygiene for anti-legionellosis bacteria's
- to produce more DHW than the quantity obtained by boiler with similar capacity because hot water is stored at a higher temperature than DHW.

INSULATION
Buffer tank: High thermal insulation with ecological hard polyurethane foam. Models 800-1000 available with dismountable hard foam insulation
MACS® module: insulating PPE cover.
Grey PVC external lining.

WARRANTY
5 years (tank)
See general sales conditions and warranty for electrical parts.

ACCESSORIES AND SPARE PARTS
See Accessories section for the entire list.

IMMEDIATE D.H.W. PRODUCTION

NEW



Electronic MACS® module

PATENTED

cordivari.com/erp



On line ErP label tool

PUFFERMAS® 1 VB

Model	MACS® module maximum output	HARD FOAM insulation Art. Nr.	SLB heat exchanger model / plates nr.	ENERGY EFFICIENCY CLASS
500	70 kW	3251162314803	SLB20 / 34	C
600		3251162314804		C
800		3251162314805		B
1000		3251162314806		C
1500		3251162314807		C
1000	120 kW	3251162314808	SLB40/ 40	C
1500		3251162314809		C

Model	DHW Station max output (*)	DHW Station max flow rate (*)	Max DHW availability (10-45°C) with storage at 70°C
	[kW]	[l/min]	[lt]
500	70 kW	30	511
600		30	614
800		30	983
1000		30	1100
1500		30	1680
1000	120 kW	50	1503
1500		50	2254

(*)Data obtained under the following conditions:
• Primary water at 80°C
• DHW production from 10°C to 45°C.

ACCESSORIES

Thermometer

Art. Nr.
5032240000107
5 units box



Recirculation kit

Art. Nr.
5221000000073
D.H.W. recirculation group



Buffer tanks connecting kit

Art. Nr.	Connection
5006170001001	1" 1/2
Stainless steel extensible connecting kit - (200 ÷ 400 mm)	



P.E.D. product designed and produced in conformity to the article 4.3 of directive 2014/68/UE - ErP Ecodesgin directive 2009/125/CE

PUFFERMAS® 1

HEATING WATER BUFFER TANK WITH MACS® MODULE FOR IMMEDIATE D.H.W. PRODUCTION

STORAGE		STAINLESS STEEL 316L BRAZED PLATE EXCHANGER (MACS®)		D.H.W. HARDNESS
Pmax	Tmax	Pmax	Tmax	F max
3 bar	99 °C	6 bar	99 °C	30 °f

CORDIVARI Lab

TÜV Rheinland Energie und Umwelt GmbH states that test procedures and Cordivari LAB are certified conforming to European standard EN 15332, as indicated by Ecodesign ErP Directive.

TESTED ErP

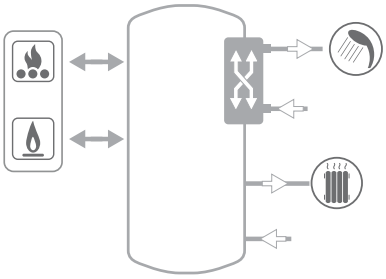

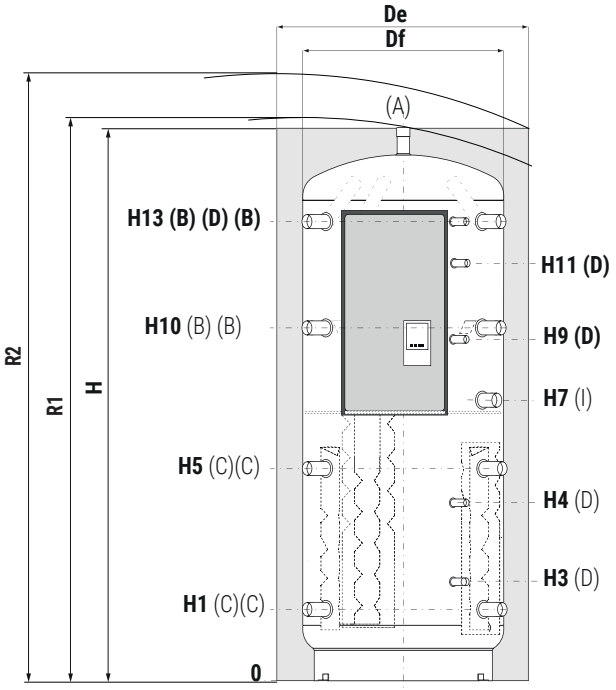

A	Heating delivery/From generator/air purge 1"1/2 F
B	Heating delivery/From generator 1"1/2 F
C	Heating return/to generator
D	Probe 1/2" F
I	Connection for electric immersion heater 1"1/2 F
L	Domestic hot water circuit outlet 3/4" M (1" M for models with 120 kW MACS® module)
M	Domestic cold water circuit inlet 3/4" M (1" M for models with 120 kW MACS® module)

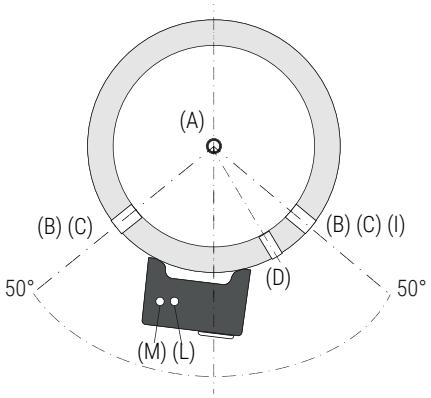



Dismountable insulation

Model	Volume	De	Df	H	R1	R2	H1	H3	H4	H5	H7	H9	H10	H11	H13
	[lt]	[mm]													
500	478	750	650	1619	//	1785	247	360	533	629	870	1025	1011	1130	1343
600	560	750	650	1870	//	2015	247	360	582	695	970	1200	1144	1485	1593
800	805	940	790	1840	1880	2067	265	378	584	690	918	1115	1115	1442	1541
1000	946	940	790	2130	2165	2329	265	384	656	787	1145	1388	1309	1588	1831
1500	1454	1100	950	2250	//	2505	313	432	736	845	1236	1396	1377	1783	1909

MACS® ELECTRONIC MODULE FOR IMMEDIATE D.H.W. PRODUCTION

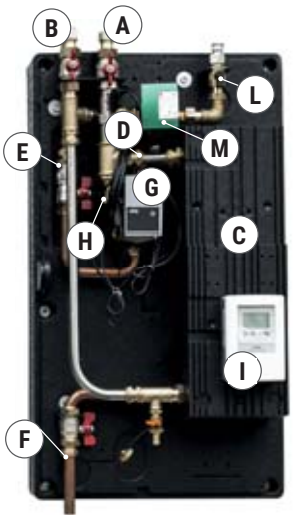

A	Domestic hot water outlet (DHW)
B	Domestic Water inlet
C	Stainless steel 316L brazed plate exchanger
D	Flow rate/ temperature probe
E	Primary Inlet
F	Primary Outlet
G	"Energy Savings" Circulation Pump
H	Valves In/Out for DHW
I	Electronic control unit

D.H.W. recirculation kit (optional)	
L	Connection for D.H.W. recirculation (optional)
M	D.H.W. recirculation pump (optional)

The MACS® module is an external unit that immediately produces D.H.W., using the heat energy stored in the Buffer thanks to the stainless steel plate exchanger, granting safety and comfort with the possibility to regulate outlet temperature.
With the new electronic regulation system, the management of the temperature on the DHW side is guaranteed and maintained in an optimal manner and with immediate response times from the electronic control unit on the module.

ErP READY APPLIES TO EUROPEAN DIRECTIVE FOR ENERGY RELATED PRODUCTS

FOR DHW FLOW RATE CHARTS REFER TO HYDRONIC SECTION - ELECTRONIC MACS® MODULE

P.E.D. product designed and produced in conformity to the article 4.3 of directive 2014/68/UE - ErP Ecodesgin directive 2009/125/CE

PUFFERMAS® 2

HEATING WATER BUFFER TANK WITH 1 FIXED HEAT EXCHANGER AND MACS® MODULE FOR IMMEDIATE D.H.W. PRODUCTION



APPLICATION
Storage of heating hot water and immediate production of D.H.W. high flow rate.

MATERIAL
Mild steel construction with exterior paint. No anti-corrosion treatment required due to the buffer's closed circuit system.

D.H.W. HEAT EXCHANGER
External MACS® module with Stainless steel 316L brazed plate exchanger for immediate D.H.W. production.

HEATING WATER HEAT EXCHANGER
N° 1 fixed heat exchanger suitable for solar thermal systems.

CIRCULATION PUMP
A pump is embedded in the MACS Module attached to the tank to allow the circulation of technical water through the plate heat exchanger, only when there is levy of DHW.
For Puffermas 70 KW -> Circulator speed: 700/4300 (min/max) n rpm; Power consumption: 1,8/43 (min/max) W; Current drawn 0,02/0,39 (min/max); Power supply 230V/1Ph/50Hz.
For Puffermas 120 KW -> Circulator speed: 700/4700 (min/max) n rpm; Power consumption: 1,8/50 (min/max) W; Current drawn 0,02/0,43 (min/max); Power supply 230V/1Ph/50Hz.

TECHNICAL DESCRIPTION
The immediate and fast production of D.H.W. granted by the MACS® module allows the following benefits:
- to reduce dimensions of the water heater needed
- easy maintenance
- maximum hygiene for anti-legionellosis bacteria's
- to produce more DHW than the quantity obtained by boiler with similar capacity because hot water is stored at a higher temperature than DHW.

INSULATION
Buffer tank: High thermal insulation with ecological hard polyurethane foam. Models 800-1000 available with dismountable hard foam insulation
MACS® module: insulating PPE cover.
Grey PVC external lining.

WARRANTY
5 years (tank)
See general sales conditions and warranty for electrical parts.

ACCESSORIES AND SPARE PARTS
See Accessories section for the entire list.

NEW

IMMEDIATE D.H.W. PRODUCTION

PUFFERMAS® 2 VB

Model	MACS® module maximum output	HARD FOAM insulation Art. Nr.	SLB heat exchanger model / plates nr.	HEAT EXCHANGER [m²]	ENERGY EFFICIENCY CLASS
500	70 kW	3251162314823	SLB20 / 34	1,9	C
600		3251162314824		2,1	C
800		3251162314825		2,5	B
1000		3251162314826		3,1	C
1500		3251162314827		3,8	C
1000	120 kW	3251162314828	SLB40/ 40	3,1	C
1500		3251162314829		3,8	C



Electronic MACS® module

PATENTED

cordivari.com/erp



On line ErP label tool

Model	DHW Station max output (*) [kW]	DHW Station max flow rate (*) [l/min]	Max DHW availability (10-45°C) with storage at 70°C [lt]
500	70 kW	30	511
600		30	614
800		30	983
1000		30	1100
1500		30	1680
1000	120 kW	50	1503
1500		50	2254

(*)Data obtained under the following conditions:
• Primary water at 80°C
• DHW production from 10°C to 45°C.

ACCESSORIES

Thermometer

Art. Nr.
5032240000107
5 units box



Recirculation kit

Art. Nr.
5221000000073
D.H.W. recirculation group



Buffer tanks connecting kit

Art. Nr.	Connection
5006170001001	1" 1/2
Stainless steel extensible connecting kit - (200 ÷ 400 mm)	



P.E.D. product designed and produced in conformity to the article 4.3 of directive 2014/68/UE - ErP Ecodesgin directive 2009/125/CE

PUFFERMAS® 2

HEATING WATER BUFFER TANK WITH 1 FIXED HEAT EXCHANGER AND MACS® MODULE FOR IMMEDIATE D.H.W. PRODUCTION

STORAGE		FIXED HEAT EXCHANGER		STAINLESS STEEL 316L BRAZED PLATE EXCHANGE[3] (MACS®)		D.H.W. HARDNESS
Pmax	Tmax	Pmax	Tmax	Pmax	Tmax	F max
3 bar	99 °C	12 bar	110 °C	6 bar	99 °C	30 °f

CORDIVARI Lab

TÜV Rheinland Energie und Umwelt GmbH states that test procedures and Cordivari LAB are certified conforming to European standard EN 15332, as indicated by Ecodesign ErP Directive.

TESTED ErP

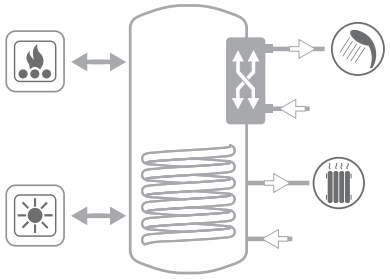

See TECHNICAL SUPPORT chapter for example of installation

A	Heating delivery/From generator/air purge 1"1/2 F
B	Heating delivery/From generator 1"1/2 F
C	Heating return/to generator
D	Probe 1/2" F
G	Heat exchanger inlet 1" F
H	Heat exchanger outlet 1" F
I	Connection for electric immersion heater 1"1/2 F
L	Domestic hot water circuit outlet 3/4" M (1" M for models with 120 kW MACS® module)
M	Domestic cold water circuit inlet 3/4" M (1" M for models with 120 kW MACS® module)

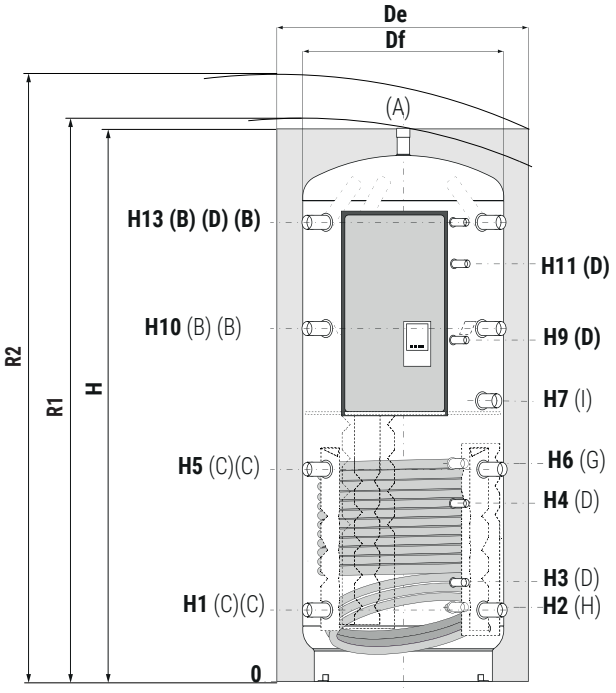

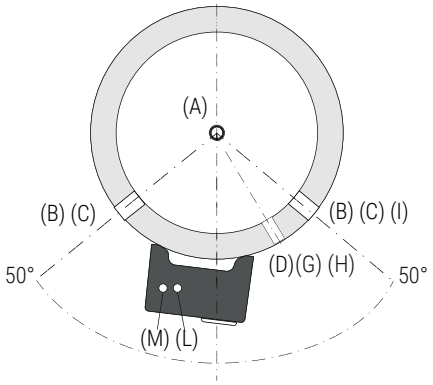



Dismountable insulation

Model	Volume	De	Df	H	R1	R2	H1	H2	H3	H4	H5	H6	H7	H9	H10	H11	H13
	[lt]	[mm]															
500	478	750	650	1619	//	1785	247	260	360	533	629	744	870	1025	1011	1130	1343
600	560	750	650	1870	//	2015	247	260	360	582	695	855	970	1200	1144	1485	1593
800	805	940	790	1840	1880	2067	265	278	378	584	690	762	918	1115	1115	1442	1541
1000	946	940	790	2130	2165	2329	265	284	384	656	787	953	1145	1388	1309	1588	1831
1500	1454	1100	950	2250	//	2505	313	336	432	736	845	1006	1236	1396	1377	1783	1909

MACS® ELECTRONIC MODULE FOR IMMEDIATE D.H.W. PRODUCTION

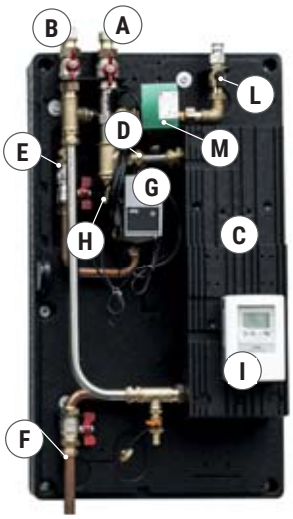

A	Domestic hot water outlet (DHW)
B	Domestic Water inlet
C	Stainless Steel Plate Exchanger
D	Flow rate/ temperature probe
E	Primary Inlet
F	Primary Outlet
G	"Energy Savings" Circulation Pump
H	Valves In/Out for DHW
I	Electronic control unit

D.H.W. recirculation kit (optional)	
L	Connection for D.H.W. recirculation (optional)
M	D.H.W. recirculation pump (optional)

FOR DHW FLOW RATE CHARTS REFER TO HYDRONIC SECTION - ELECTRONIC MACS® MODULE

The MACS® module is an external unit that immediately produces D.H.W., using the heat energy stored in the Buffer thanks to the stainless steel plate exchanger, granting safety and comfort with the possibility to regulate outlet temperature.
With the new electronic regulation system, the management of the temperature on the DHW side is guaranteed and maintained in an optimal manner and with immediate response times from the electronic control unit on the module.

ErP READY APPLIES TO EUROPEAN DIRECTIVE FOR ENERGY RELATED PRODUCTS

P.E.D. product designed and produced in conformity to the article 4.3 of directive 2014/68/UE - ErP Ecodesgin directive 2009/125/CE

CORDIVARI

PUFFERMAS® 3

HEATING WATER BUFFER TANK WITH 2 FIXED HEAT EXCHANGERS AND MACS® MODULE FOR IMMEDIATE D.H.W. PRODUCTION



APPLICATION
Storage of heating hot water and immediate production of D.H.W. high flow rate.
MATERIAL
Mild steel construction with exterior paint. No anti-corrosion treatment required due to the buffer's closed circuit system.
D.H.W. HEAT EXCHANGER
External MACS® module with Stainless steel 316L brazed plate exchanger for immediate D.H.W. production.
HEATING WATER HEAT EXCHANGER
N° 2 fixed heat exchangers suitable for solar thermal systems and other heat source.
TECHNICAL DESCRIPTION
The immediate and fast production of D.H.W. granted by the MACS® module allows the following benefits:
- to reduce dimensions of the water heater needed
- easy maintenance
- maximum hygiene for anti-legionellosis bacteria's
- to produce more DHW than the quantity obtained by boiler with similar capacity because hot water is stored at a higher temperature than DHW.

INSULATION
Buffer tank: High thermal insulation with ecological hard polyurethane foam. Models 800-1000 available with dismountable hard foam insulation
MACS® module: insulating PPE cover.
Grey PVC external lining.
WARRANTY
5 years (tank)
See general sales conditions and warranty for electrical parts.
ACCESSORIES AND SPARE PARTS
See Accessories section for the entire list.

IMMEDIATE D.H.W. PRODUCTION

NEW

PUFFERMAS® 3 VB

Model	MACS® module maximum output	HARD FOAM insulation Art. Nr.	SLB heat exchanger model / plates nr.	HEAT EXCHANGER Upper [lt]	HEAT EXCHANGER Lower [m²]	ENERGY EFFICIENCY CLASS
500	70 kW	3251162314843	SLB20 / 34	1,3	1,9	**C**
600		3251162314844		1,3	2,1	**C**
800		3251162314845		1,8	2,5	**B**
1000		3251162314846		2,5	3,1	**C**
1500		3251162314847		2,8	3,8	**C**
1000	120 kW	3251162314848	SLB40/ 40	2,5	3,1	**C**
1500		3251162314849		2,8	3,8	**C**



PATENTED

cordivari.com/erp



On line ErP label tool

Model	DHW Station max output (*) [kW]	DHW Station max flow rate (*) [l/min]	Max DHW availability (10-45°C) with storage at 70°C [lt]
500	70 kW	30	511
600		30	614
800		30	983
1000		30	1100
1500		30	1680
1000	120 kW	50	1503
1500		50	2254

(*)Data obtained under the following conditions:
• Primary water at 80°C
• DHW production from 10°C to 45°C.

ACCESSORIES

Thermometer

Art. Nr.
5032240000107
5 units box



Recirculation kit

Art. Nr.
5221000000073
D.H.W. recirculation group



Buffer tanks connecting kit

Art. Nr.	Connection
5006170001001	1" 1/2
Stainless steel extensible connecting kit - (200 ÷ 400 mm)	



P.E.D. product designed and produced in conformity to the article 4.3 of directive 2014/68/UE - ErP Ecodesgin directive 2009/125/CE

PUFFERMAS® 3

HEATING WATER BUFFER TANK WITH 2 FIXED HEAT EXCHANGERS AND MACS® MODULE FOR IMMEDIATE D.H.W. PRODUCTION

STORAGE		FIXED HEAT EXCHANGER		STAINLESS STEEL 316L BRAZED PLATE EXCHANGE[3] (MACS®)		D.H.W. HARDNESS
Pmax	Tmax	Pmax	Tmax	Pmax	Tmax	F max
3 bar	99 °C	12 bar	110 °C	6 bar	99 °C	30 °f

CORDIVARI Lab

TÜV Rheinland Energie und Umwelt GmbH states that test procedures and Cordivari LAB are certified conforming to European standard EN 15332, as indicated by Ecodesign ErP Directive.

TESTED ErP

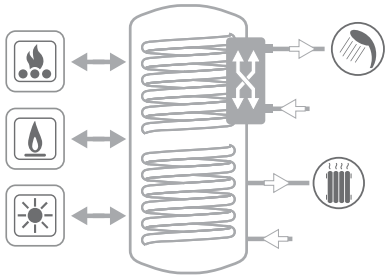

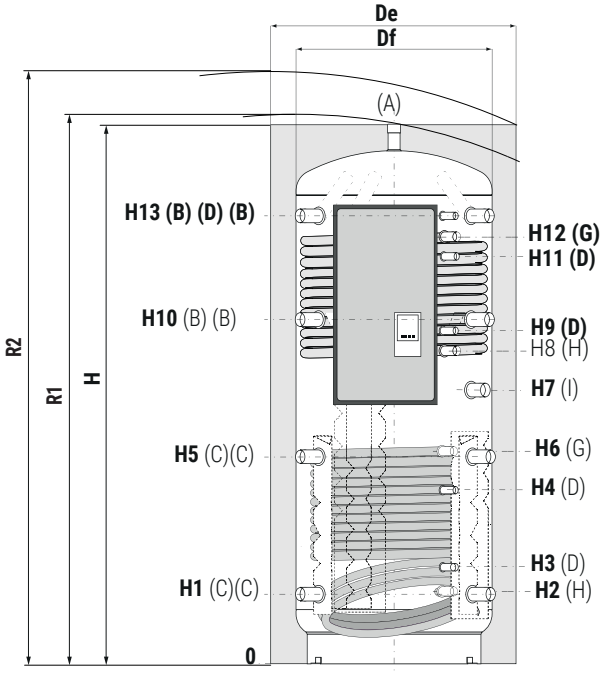

A	Heating delivery/From generator/air purge 1"1/2 F
B	Heating delivery/From generator 1"1/2 F
C	Heating return/to generator
D	Probe 1/2" F
G	Heat exchanger inlet 1" F
H	Heat exchanger outlet 1" F
I	Connection for electric immersion heater 1"1/2 F
L	Domestic hot water circuit outlet 3/4" M (1" M for models with 120 kW MACS® module)
M	Domestic cold water circuit inlet 3/4" M (1" M for models with 120 kW MACS® module)

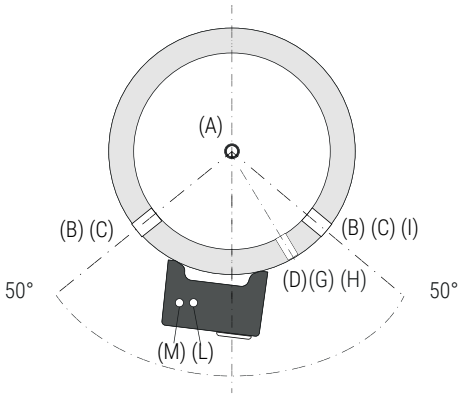



BUFFER TANKS AND MULTIFUEL CILYNDERS

Model	Volume	De	Df	H	R1	R2	H1	H2	H3	H4	H5	H6	H7	H8	H9	H10	H11	H12	H13
	[lt]	[mm]																	
500	478	750	650	1619	//	1785	247	260	360	533	629	744	870	930	1025	1011	1130	1231	1343
600	560	750	650	1870	//	2015	247	260	360	582	695	855	970	1090	1200	1144	1485	1391	1593
800	805	940	790	1840	1880	2067	265	278	378	584	690	762	918	1003	1115	1115	1442	1347	1541
1000	946	940	790	2130	2165	2329	265	284	384	656	787	953	1145	1188	1388	1309	1588	1661	1831
1500	1454	1100	950	2250	//	2505	313	336	432	736	845	1006	1236	1286	1396	1377	1783	1673	1909

MACS® ELECTRONIC MODULE FOR IMMEDIATE D.H.W. PRODUCTION

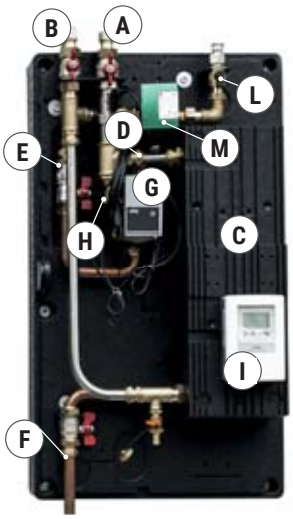

A	Domestic hot water outlet (DHW)
B	Domestic Water inlet
C	Stainless Steel Plate Exchanger
D	Flow rate/ temperature probe
E	Primary Inlet
F	Primary Outlet
G	"Energy Savings" Circulation Pump
H	Valves In/Out for DHW
I	Electronic control unit

D.H.W. recirculation kit (optional)	
L	Connection for D.H.W. recirculation (optional)
M	D.H.W. recirculation pump (optional)

FOR DHW FLOW RATE CHARTS REFER TO HYDRONIC SECTION - ELECTRONIC MACS® MODULE

The MACS® module is an external unit that immediately produces D.H.W., using the heat energy stored in the Buffer thanks to the stainless steel plate exchanger, granting safety and comfort with the possibility to regulate outlet temperature.
With the new electronic regulation system, the management of the temperature on the DHW side is guaranteed and maintained in an optimal manner and with immediate response times from the electronic control unit on the module.

ErP READY APPLIES TO EUROPEAN DIRECTIVE FOR ENERGY RELATED PRODUCTS

P.E.D. product designed and produced in conformity to the article 4.3 of directive 2014/68/UE - ErP Ecodesgin directive 2009/125/CE

CORDIVARI

PUFFERMAS® **2 CTS**

HEATING WATER BUFFER TANK WITH STRATIFICATION DEVICE, 1 FIXED HEAT EXCHANGER AND MACS® MODULE FOR IMMEDIATE D.H.W. PRODUCTION



APPLICATION
Storage of heating hot water and immediate production of D.H.W. high flow rate.
MATERIAL
Mild steel construction with exterior paint. No anti-corrosion treatment required due to the buffer's closed circuit system.
D.H.W. HEAT EXCHANGER
External MACS® module with Stainless steel 316L brazed plate exchanger for immediate D.H.W. production.
HEATING WATER HEAT EXCHANGER
N° 1 fixed heat exchanger suitable for solar thermal systems.
TECHNICAL DESCRIPTION
The immediate and fast production of D.H.W. granted by the MACS® module allows the following benefits:
- to reduce dimensions of the water heater needed
- easy maintenance
- maximum hygiene for anti-legionellosis bacteria's
- to produce more DHW than the quantity obtained by calorifier with similar capacity because hot water is stored at a higher temperature than DHW.

Puffermas 2 CTS® is characterized by multiple thermal stratification system based on the combination of Cordivari Labyrinth spreader for returning heating water (both from heating installation and from MACS® DHW station) with a new stratification device that conveys in the upper part of the tank the heated water up by the lower fixed exchanger. This combination ensures a perfect natural stratification inside the tank with no valve or additional external device.
The lower fixed exchanger can be connected with a solar system. Being positioned at the bottom lower part of the buffer tank and with very small footprint, it increases the volume available for the storage.
INSULATION
Buffer tank: High thermal insulation with ecological hard polyurethane foam. Models 800-1000 available with dismountable hard foam insulation
MACS® module: insulating PPE cover.
Grey PVC external lining.
WARRANTY
5 years (tank)
See general sales conditions and warranty for electrical parts.
ACCESSORIES AND SPARE PARTS
See Accessories section for the entire list.

IMMEDIATE D.H.W. PRODUCTION

NEW

PUFFERMAS® 2 CTS B

Model	MACS® module maximum output	HARD FOAM insulation Art. Nr.	SLB heat exchanger model / plates nr.	HEAT EXCHANGER [m²]	ENERGY EFFICIENCY CLASS
500	70 kW	3251162316503	SLB20 / 34	1,9	C
600		3251162316504		2,1	C
800		3251162316505		2,5	B
1000		3251162316506		3,1	C
1500		3251162316507		3,8	C
1000	120 kW	3251162316508	SLB40/ 40	3,1	C
1500		3251162316509		3,8	C



Electronic MACS® module

PATENTED

Model	DHW Station max output (*)	DHW Station max flow rate (*)	Max DHW availability (10-45°C) with storage at 70°C
	[kW]	[l/min]	[lt]
500	70 kW	30	511
600		30	614
800		30	983
1000		30	1100
1500		30	1680
1000	120 kW	50	1503
1500		50	2254

(*)Data obtained under the following conditions:
• Primary water at 80°C
• DHW production from 10°C to 45°C.

cordivari.com/erp



On line ErP label tool

ACCESSORIES

Thermometer

Art. Nr.
5032240000107
5 units box



Recirculation kit

Art. Nr.
5221000000073
D.H.W. recirculation group



Buffer tanks connecting kit

Art. Nr.	Connection
5006170001001	1" 1/2
Stainless steel extensible connecting kit - (200 ÷ 400 mm)	



P.E.D. product designed and produced in conformity to the article 4.3 of directive 2014/68/UE - ErP Ecodesgin directive 2009/125/CE

PUFFERMAS® **2 CTS**

HEATING WATER BUFFER TANK WITH STRATIFICATION DEVICE, 1 FIXED HEAT EXCHANGER AND MACS® MODULE FOR IMMEDIATE D.H.W. PRODUCTION

STORAGE		FIXED HEAT EXCHANGER		STAINLESS STEEL 316L BRAZED PLATE EXCHANGE[3] (MACS®)		D.H.W. HARDNESS
Pmax	Tmax	Pmax	Tmax	Pmax	Tmax	F max
3 bar	99 °C	12 bar	110 °C	6 bar	99 °C	30 °f

CORDIVARI Lab

TÜV Rheinland Energie und Umwelt GmbH states that test procedures and Cordivari LAB are certified conforming to European standard EN 15332, as indicated by Ecodesign ErP Directive.

TESTED ErP

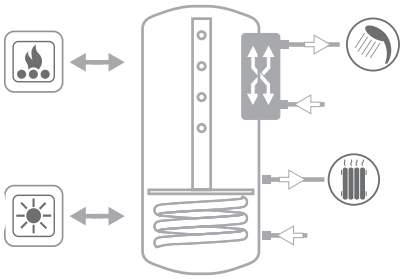

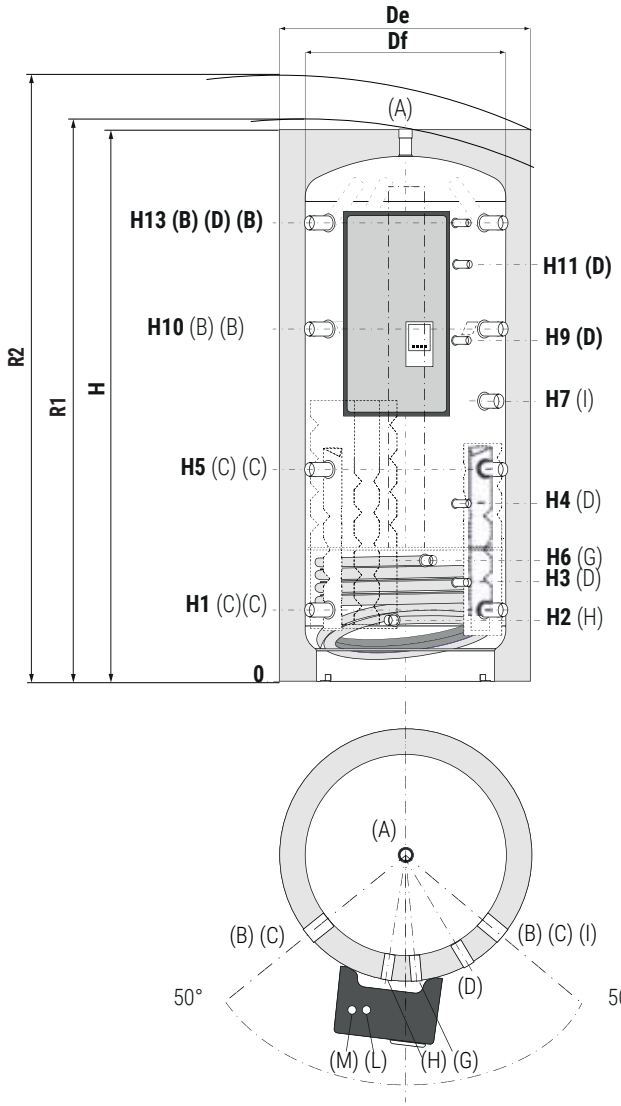

A	Heating delivery/From generator/air purge 1"1/2 F
B	Heating delivery/From generator 1"1/2 F
C	Heating return/to generator
D	Probe 1/2" F
G	Heat exchanger inlet 1" F
H	Heat exchanger outlet 1" F
I	Connection for electric immersion heater 1"1/2 F
L	Domestic hot water circuit outlet 3/4" M (1" M for models with 120 kW MACS® module)
M	Domestic cold water circuit inlet 3/4" M (1" M for models with 120 kW MACS® module)

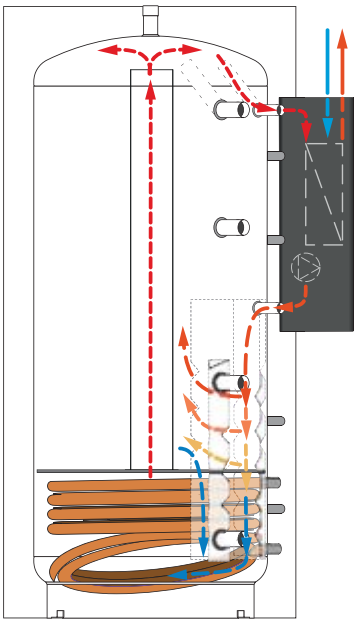

SUITABLE FOR SOLAR THERMAL SYSTEMS

THE ILLUSTRATION UNDERLINES THE STRATIFICATION PROCESS (FROM TOP TO BOTTOM) THAT ALLOWS TO HAVE ALL NEEDED ENERGY RAPIDLY AVAILABLE

Dismountable insulation

Model	Volume	De	Df	H	R1	R2	H1	H2	H3	H4	H5	H6	H7	H8	H9	H10	H11	H12	H13
	[lt]	[mm]																	
500	478	750	650	1619	//	1785	247	215	360	533	629	425	870	//	1025	1011	1130	//	1343
600	560	750	650	1870	//	2015	247	215	360	582	695	425	970	//	1200	1144	1485	//	1593
800	805	940	790	1840	1880	2067	265	233	378	584	690	443	918	//	1115	1115	1442	//	1541
1000	946	940	790	2130	2165	2329	265	233	384	656	787	443	1145	//	1388	1309	1588	//	1831
1500	1454	1100	950	2250	//	2505	313	281	432	736	845	491	1236	//	1396	1377	1783	//	1909

P.E.D. product designed and produced in conformity to the article 4.3 of directive 2014/68/UE - ErP Ecodesgin directive 2009/125/CE

PUFFERMAS® **3 CTS**

HEATING WATER BUFFER TANK WITH STRATIFICATION DEVICE, 2 FIXED HEAT EXCHANGERS AND MACS® MODULE FOR IMMEDIATE D.H.W. PRODUCTION



APPLICATION
Storage of heating hot water with stratification device and D.H.W immediate production with high flow rate. Ideal for solar thermal solutions and for heating systems with mixed energy sources such as biomass and solar and even allowing the integration of a third energy source.

MATERIAL
Mild steel construction with exterior paint. No anti-corrosion treatment required due to the buffer's closed circuit system.

D.H.W. HEAT EXCHANGER
External MACS® module with Stainless steel 316L brazed plate exchanger for immediate D.H.W. production.

HEATING WATER HEAT EXCHANGER
N° 2 fixed heat exchangers suitable for solar thermal systems and other generator.

TECHNICAL DESCRIPTION
The immediate and fast production of D.H.W. granted by the MACS® module allows the following benefits:
- to reduce dimensions of the water heater needed
- easy maintenance
- maximum hygiene for anti-legionellosis bacteria's
- to produce more DHW than the quantity obtained by calorifier with similar capacity because hot water is stored at a higher temperature than DHW.

Puffermas 3 CTS® is characterized by multiple thermal stratification system based on the combination of Cordivari Labyrinth spreader for returning heating water (both from heating installation and from MACS® DHW station) with a new stratification device that conveys in the upper part of the tank the heated water up by the lower fixed coil. This combination ensures a perfect natural stratification inside the tank with no valve or additional external device.
The lower fixed coil allows the possibility of connecting with a solar system. Being positioned at the bottom lower part of the buffer tank and with very small footprint, it increases the volume available for the storage. Puffermas® 3 CTS è in grado di integrare l'utilizzo di una terza fonte di calore separata oltre al solare e alla biomassa

INSULATION
Buffer tank: High thermal insulation with ecological hard polyurethane foam. Models 800-1000 available with dismountable hard foam insulation
MACS® module: insulating PPE cover. Grey PVC external lining.

WARRANTY
5 years (tank)
See general sales conditions and warranty for electrical parts.

ACCESSORIES AND SPARE PARTS
See Accessories section for the entire list.

NEW

IMMEDIATE D.H.W. PRODUCTION

PUFFERMAS® 3 CTS VB

Model	MACS® module maximum output	HARD FOAM insulation Art. Nr.	SLB heat exchanger model / plates nr.	HEAT EXCHANGER Upper [lt]	HEAT EXCHANGER Lower [m²]	ENERGY EFFICIENCY CLASS
500	70 kW	3251162316543	SLB20 / 34	1,3	1,9	C
600		3251162316544		1,3	2,1	C
800		3251162316545		1,8	2,5	B
1000		3251162316546		2,5	3,1	C
1500		3251162316547		2,8	3,8	C
1000	120 kW	3251162316548	SLB40/ 40	2,5	3,1	C
1500		3251162316549		2,8	3,8	C



Electronic MACS® module

PATENTED

cordivari.com/erp



On line ErP label tool

Model	DHW Station max output (*) [kW]	DHW Station max flow rate (*) [l/min]	Max DHW availability (10-45°C) with storage at 70°C [lt]
500	70 kW	30	511
600		30	614
800		30	983
1000		30	1100
1500		30	1680
1000	120 kW	50	1503
1500		50	2254

(*)Data obtained under the following conditions:
• Primary water at 80°C
• DHW production from 10°C to 45°C.

ACCESSORIES

Thermometer

Art. Nr.
5032240000107
5 units box



Recirculation kit

Art. Nr.
5221000000073
D.H.W. recirculation group



Buffer tanks connecting kit

Art. Nr.	Connection
5006170001001	1" 1/2
Stainless steel extensible connecting kit - (200 ÷ 400 mm)	



P.E.D. product designed and produced in conformity to the article 4.3 of directive 2014/68/UE - ErP Ecodesgin directive 2009/125/CE

PUFFERMAS® 3 CTS

HEATING WATER BUFFER TANK WITH STRATIFICATION DEVICE, 2 FIXED HEAT EXCHANGERS AND MACS® MODULE FOR IMMEDIATE D.H.W. PRODUCTION

STORAGE		FIXED HEAT EXCHANGER		STAINLESS STEEL 316L BRAZED PLATE EXCHANGE® (MACS®)		D.H.W. HARDNESS
Pmax	Tmax	Pmax	Tmax	Pmax	Tmax	F max
3 bar	99 °C	12 bar	110 °C	6 bar	99 °C	30 °f

CORDIVARI Lab

TÜV Rheinland Energie und Umwelt GmbH states that test procedures and Cordivari LAB are certified conforming to European standard EN 15332, as indicated by Ecodesign ErP Directive.

TESTED ErP

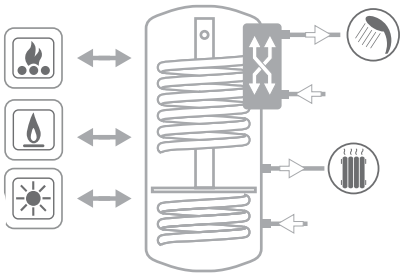

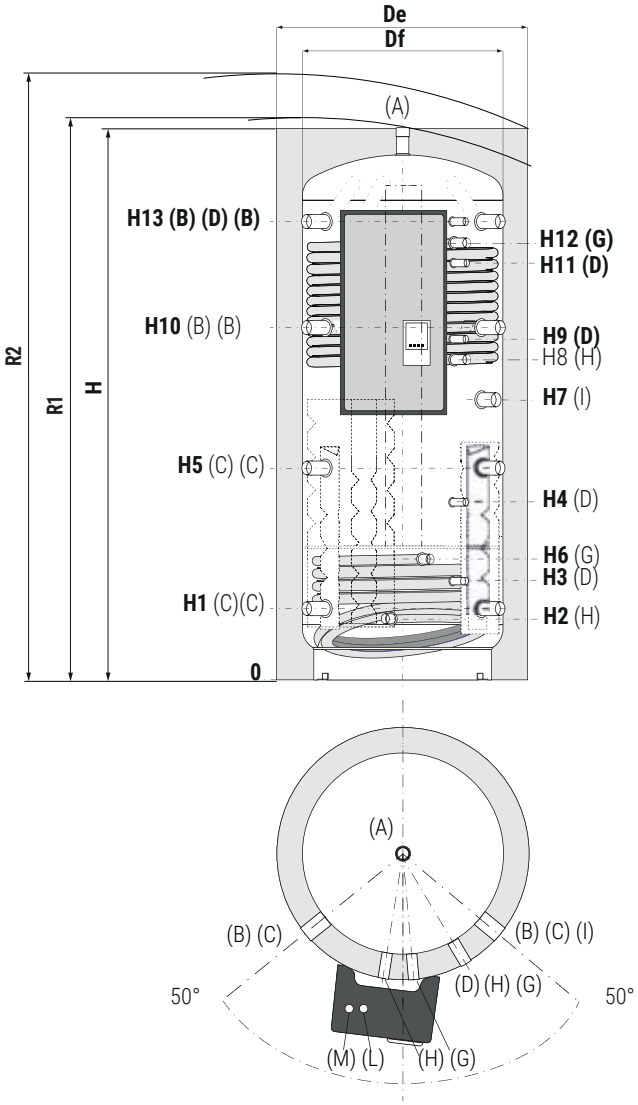

A	Heating delivery/From generator/air purge 1"1/2 F
B	Heating delivery/From generator 1"1/2 F
C	Heating return/to generator
D	Probe 1/2" F
G	Heat exchanger inlet 1" F
H	Heat exchanger outlet 1" F
I	Connection for electric immersion heater 1"1/2 F
L	Domestic hot water circuit outlet 3/4" M (1" M for models with 120 kW MACS® module)
M	Domestic cold water circuit inlet 3/4" M (1" M for models with 120 kW MACS® module)

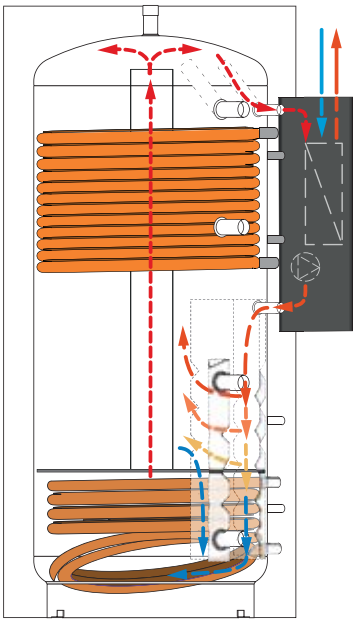

SUITABLE FOR SOLAR THERMAL SYSTEMS

THE ILLUSTRATION UNDERLINES THE STRATIFICATION PROCESS (FROM TOP TO BOTTOM) THAT ALLOWS TO HAVE ALL NEEDED ENERGY RAPIDLY AVAILABLE



Dismountable insulation

Model	Volume	De	H	A	H1	H2	H3	H4	H5	H6	H7	H8	H9	H10	H11	H12	H13
	[lt]	[mm]															
500	650	750	1619	1784	247	215	360	533	629	425	870	930	1025	1011	1130	1231	1343
600	650	750	1870	2015	247	215	360	582	695	425	970	1090	1200	1144	1485	1391	1593
800	790	940	1840	2066	265	233	378	584	690	443	918	1003	1115	1115	1442	1347	1541
1000	790	940	2130	2328	265	233	384	656	787	443	1145	1188	1388	1309	1588	1661	1831
1500	950	1100	2250	2504	313	281	432	736	845	491	1236	1286	1396	1377	1783	1673	1909

P.E.D. product designed and produced in conformity to the article 4.3 of directive 2014/68/UE - ErP Ecodesgin directive 2009/125/CE

PUFFERMAS® **2 CTS POWER**

HEATING WATER BUFFER TANK WITH STRATIFICATION DEVICE, 1 FIXED HEAT EXCHANGER, MACS® MODULE FOR IMMEDIATE D.H.W. PRODUCTION AND INTEGRATED SOLAR STATION



APPLICATION
Storage by stratification of heating water, immediate production of domestic hot water (DHW) with high flow rates and performances and management of the solar circulation, in solar thermal system / biomass boiler.
MATERIAL
Mild steel construction with exterior paint. No anti-corrosion treatment required due to the buffer's closed circuit system.
D.H.W. HEAT EXCHANGER
External MACS® module with Stainless steel 316L brazed plate exchanger for immediate D.H.W. production.
SOLAR STATION
Complete with electronic control unit with 5 temperatures probes able to manage up to 27 types of system and complete circulation group.
HEATING WATER HEAT EXCHANGER
N° 1 fixed heat exchanger suitable for solar thermal systems.
TECHNICAL DESCRIPTION
Specific for accumulation and management of the heat produced by the thermal solar system, combines the use of the Puffer's characteristics with the ones of a fast DHW producer without the storage of domestic hot water, with the following advantages:
- to reduce dimensions of the needed water heater
- easy maintenance
- maximum hygiene for anti-legionellosis bacteria's
- to produce more DHW than the quantity obtained by boiler with similar capacity because hot water is stored at a higher temperature than DHW.

INSULATION
Buffer tank: High thermal insulation with ecological hard polyurethane foam. Models 800-1000 available with dismountable hard foam insulation
MACS® module and solar circulation group: insulating PPE cover.
Grey PVC external lining
WARRANTY
5 years (tank)
See general sales conditions and warranty for electrical parts.
ACCESSORIES AND SPARE PARTS
See Accessories section for the entire list.

NEW

IMMEDIATE D.H.W. PRODUCTION

PUFFERMAS® 2 CTS POWER VB

Model	MACS® module maximum output	HARD FOAM insulation Art. Nr.	SLB heat exchanger model / plates nr.	HEAT EXCHANGER [m²]	ENERGY EFFICIENCY CLASS
500	70 kW	3251162316523	SLB20 / 34	1,9	C
600		3251162316524		2,1	C
800		3251162316525		2,5	B
1000		3251162316526		3,1	C
1500		3251162316527		3,8	C
1000	120 kW	3251162316528	SLB40/ 40	3,1	C
1500		3251162316529		3,8	C



PATENTED

Model	DHW Station max output (*)	DHW Station max flow rate (*)	Max DHW availability (10-45°C) with storage at 70°C
	[kW]	[l/min]	[lt]
500	70 kW	30	511
600		30	614
800		30	983
1000		30	1100
1500		30	1680
1000	120 kW	50	1503
1500		50	2254

(*)Data obtained under the following conditions:
• Primary water at 80°C
• DHW production from 10°C to 45°C.

cordivari.com/erp



On line ErP label tool

ACCESSORIES

Thermometer

Art. Nr.
5032240000107
5 units box



Recirculation kit

Art. Nr.
5221000000073
D.H.W. recirculation group



Buffer tanks connecting kit

Art. Nr.	Connection
5006170001001	1" 1/2
Stainless steel extensible connecting kit - (200 ÷ 400 mm)	



P.E.D. product designed and produced in conformity to the article 4.3 of directive 2014/68/UE - ErP Ecodesgin directive 2009/125/CE

PUFFERMAS® **2 CTS POWER**

HEATING WATER BUFFER TANK WITH STRATIFICATION DEVICE, 1 FIXED HEAT EXCHANGER, MACS® MODULE FOR IMMEDIATE D.H.W. PRODUCTION AND INTEGRATED SOLAR STATION

STORAGE		FIXED HEAT EXCHANGER		STAINLESS STEEL 316L BRAZED PLATE EXCHANGE[3] (MACS®)		D.H.W. HARDNESS
Pmax	Tmax	Pmax	Tmax	Pmax	Tmax	F max
3 bar	99 °C	12 bar	110 °C	6 bar	99 °C	30 °f

CORDIVARI Lab

TÜV Rheinland Energie und Umwelt GmbH states that test procedures and Cordivari LAB are certified conforming to European standard EN 15332, as indicated by Ecodesign ErP Directive.

TESTED ErP

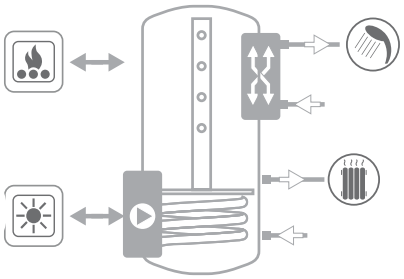

See TECHNICAL SUPPORT chapter for example of installation

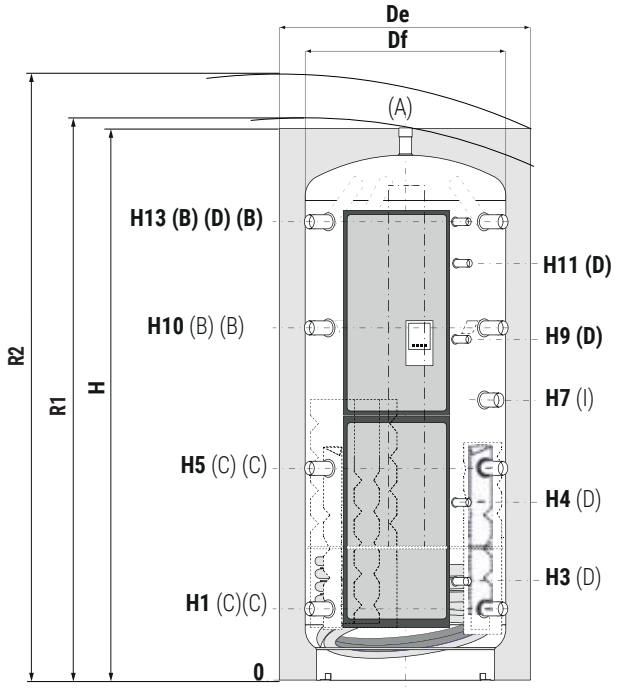

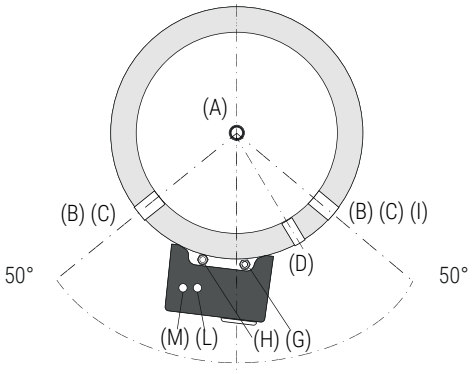

A	Heating delivery/From generator/air purge 1"1/2 F
B	Heating delivery/From generator 1"1/2 F
C	Heating return/to generator
D	Probe 1/2" F
I	Connection for electric immersion heater 1"1/2 F
L	Domestic hot water circuit outlet 3/4" M (1" M for models with 120 kW MACS® module)
M	Domestic cold water circuit inlet 3/4" M (1" M for models with 120 kW MACS® module)

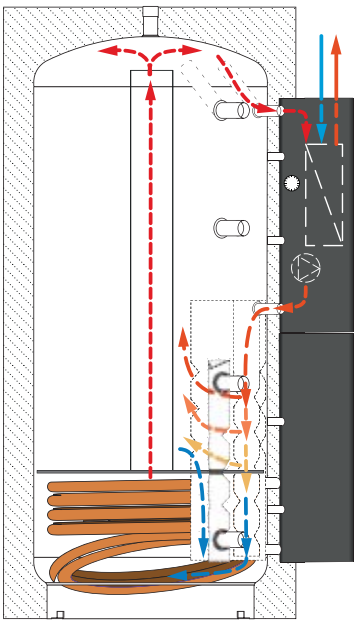

SUITABLE FOR SOLAR THERMAL SYSTEMS

THE ILLUSTRATION UNDERLINES THE STRATIFICATION PROCESS (FROM TOP TO BOTTOM) THAT ALLOWS TO HAVE ALL NEEDED ENERGY RAPIDLY AVAILABLE



Dismountable insulation

Model	Volume	De	Df	H	R1	R2	H1	H3	H4	H5	H7	H9	H10	H11	H13
	[lt]	[mm]													
500	478	750	650	1619	//	1785	247	360	533	629	870	1025	1011	1130	1343
600	560	750	650	1870	//	2015	247	360	582	695	970	1200	1144	1485	1593
800	805	940	790	1840	1880	2067	265	378	584	690	918	1115	1115	1442	1541
1000	946	940	790	2130	2165	2329	265	384	656	787	1145	1388	1309	1588	1831
1500	1454	1100	950	2250	//	2505	313	432	736	845	1236	1396	1377	1783	1909

P.E.D. product designed and produced in conformity to the article 4.3 of directive 2014/68/UE - ErP Ecodesgin directive 2009/125/CE

PUFFERMAS® **3 CTS POWER**

HEATING WATER BUFFER TANK WITH STRATIFICATION DEVICE, 2 FIXED HEAT EXCHANGERS, MACS® MODULE FOR IMMEDIATE D.H.W. PRODUCTION AND INTEGRATED SOLAR STATION



APPLICATION
Storage by stratification of heating water, immediate production of domestic hot water (DHW) with high flow rates and performances and management of the solar circulation, in solar thermal system / biomass boiler.
MATERIAL
Mild steel construction with exterior paint. No anti-corrosion treatment required due to the buffer's closed circuit system.
D.H.W. HEAT EXCHANGER
External MACS® module with Stainless steel 316L brazed plate exchanger for immediate D.H.W. production.
SOLAR STATION
Complete with electronic control unit with 5 temperatures probes able to manage up to 27 types of system and complete circulation group.
HEATING WATER HEAT EXCHANGER
N° 2 fixed heat exchangers suitable for solar thermal systems and other heat source.
TECHNICAL DESCRIPTION
Specific for accumulation and management of the heat produced by the thermal solar system, combines the use of the Puffer's characteristics with the ones of a fast DHW producer without the storage of domestic hot water, with the following advantages:
- to reduce dimensions of the needed water heater
- easy maintenance
- maximum hygiene for anti-legionellosis bacteria's
- to produce more DHW than the quantity obtained by boiler with similar capacity because hot water is stored at a higher temperature than DHW.

Puffermas® 3 CTS POWER is able to integrate the use of a third separate heat source in addition to solar and biomass.
INSULATION
Buffer tank: High thermal insulation with ecological hard polyurethane foam. Models 800-1000 available with dismountable hard foam insulation
MACS® module and solar circulation group: insulating PPE cover.
Grey PVC external lining
WARRANTY
5 years (tank)
See general sales conditions and warranty for electrical parts.
ACCESSORIES AND SPARE PARTS
See Accessories section for the entire list.

NEW

IMMEDIATE D.H.W. PRODUCTION

PUFFERMAS® 3 CTS POWER VB

Model	MACS® module maximum output	HARD FOAM insulation Art. Nr.	SLB heat exchanger model / plates nr.	HEAT EXCHANGER Sup. [lt]	HEAT EXCHANGER Inf. [m²]	ENERGY EFFICIENCY CLASS
500	70 kW	3251162316563	SLB20 / 34	1,3	1,9	**C**
600		3251162316564		1,3	2,1	**C**
800		3251162316565		1,8	2,5	**B**
1000		3251162316566		2,5	3,1	**C**
1500		3251162316567		2,8	3,8	**C**
1000	120 kW	3251162316568	SLB40/ 40	2,5	3,1	**C**
1500		3251162316569		2,8	3,8	**C**



PATENTED

cordivari.com/erp



On line ErP label tool

Model	DHW Station max output (*) [kW]	DHW Station max flow rate (*) [l/min]	Max DHW availability (10-45°C) with storage at 70°C [lt]
500	70 kW	30	511
600		30	614
800		30	983
1000		30	1100
1500		30	1680
1000	120 kW	50	1503
1500		50	2254

(*)Data obtained under the following conditions:
• Primary water at 80°C
• DHW production from 10°C to 45°C.

ACCESSORIES

Thermometer

Art. Nr.
5032240000107
5 units box



Recirculation kit

Art. Nr.
5221000000073
D.H.W. recirculation group



Buffer tanks connecting kit

Art. Nr.	Connection
5006170001001	1" 1/2
Stainless steel extensible connecting kit - (200 ÷ 400 mm)	



P.E.D. product designed and produced in conformity to the article 4.3 of directive 2014/68/UE - ErP Ecodesgin directive 2009/125/CE

PUFFERMAS® **3 CTS POWER**

HEATING WATER BUFFER TANK WITH STRATIFICATION DEVICE, 2 FIXED HEAT EXCHANGERS, MACS® MODULE FOR IMMEDIATE D.H.W. PRODUCTION AND INTEGRATED SOLAR STATION

STORAGE		FIXED HEAT EXCHANGER		STAINLESS STEEL 316L BRAZED PLATE EXCHANGE[3] (MACS®)		D.H.W. HARDNESS
Pmax	Tmax	Pmax	Tmax	Pmax	Tmax	F max
3 bar	99 °C	12 bar	110 °C	6 bar	99 °C	30 °f

CORDIVARI Lab

TÜV Rheinland Energie und Umwelt GmbH states that test procedures and Cordivari LAB are certified conforming to European standard EN 15332, as indicated by Ecodesign ErP Directive.

TESTED ErP

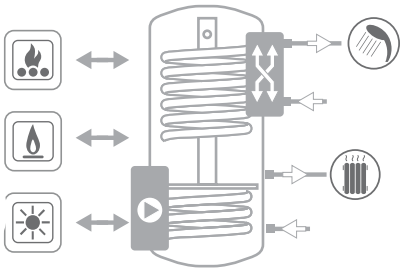

See TECHNICAL SUPPORT chapter for example of installation

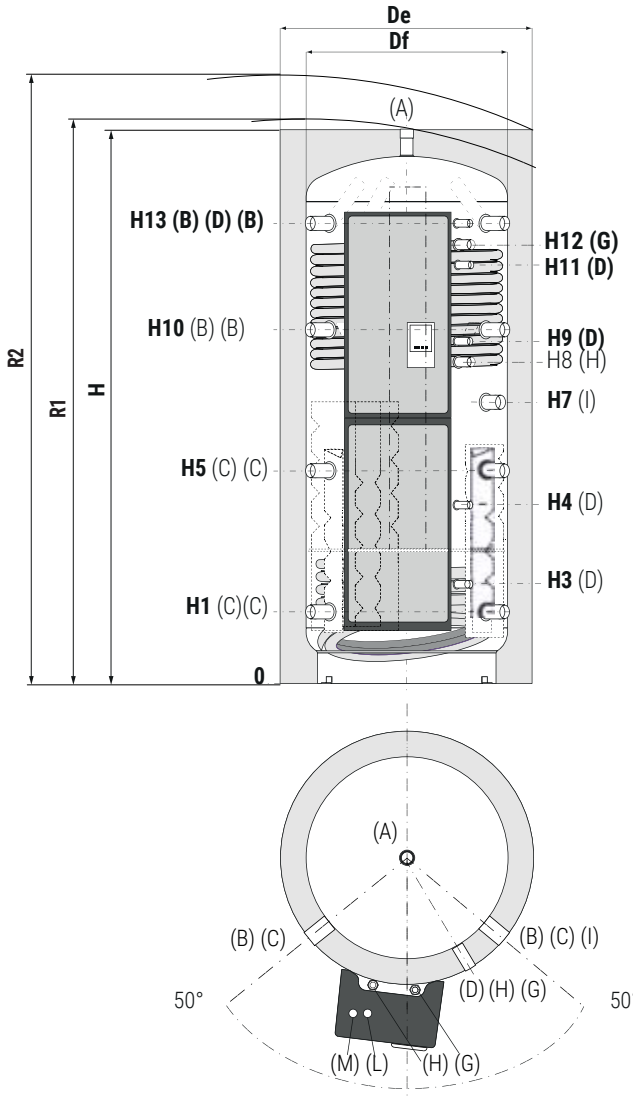

A	Heating delivery/From generator/air purge 1"1/2 F
B	Heating delivery/From generator 1"1/2 F
C	Heating return/to generator
D	Probe 1/2" F
G	Heat exchanger inlet 1" F
H	Heat exchanger outlet 1" F
I	Connection for electric immersion heater 1"1/2 F
L	Domestic hot water circuit outlet 3/4" M (1" M for models with 120 kW MACS® module)
M	Domestic cold water circuit inlet 3/4" M (1" M for models with 120 kW MACS® module)

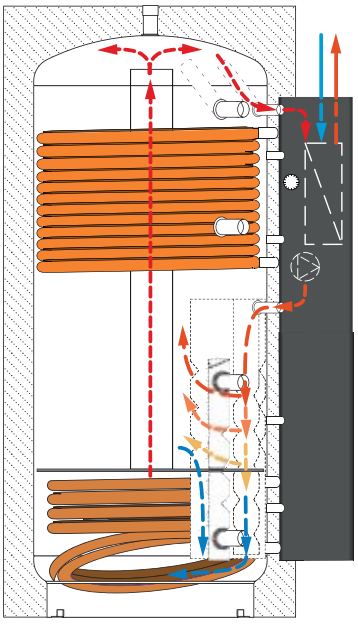

SUITABLE FOR SOLAR THERMAL SYSTEMS

THE ILLUSTRATION UNDERLINES THE STRATIFICATION PROCESS (FROM TOP TO BOTTOM) THAT ALLOWS TO HAVE ALL NEEDED ENERGY RAPIDLY AVAILABLE



Dismountable insulation

Model	Volume	De	Df	H	R1	R2	H1	H3	H4	H5	H7	H8	H9	H10	H11	H12	H13
	[lt]	[mm]															
500	478	750	650	1619	//	1785	247	360	533	629	870	930	1025	1011	1130	1231	1343
600	560	750	650	1870	//	2015	247	360	582	695	970	1090	1200	1144	1485	1391	1593
800	805	940	790	1840	1880	2067	265	378	584	690	918	1003	1115	1115	1442	1347	1541
1000	946	940	790	2130	2165	2329	265	384	656	787	1145	1188	1388	1309	1588	1661	1831
1500	1454	1100	950	2250	//	2505	313	432	736	845	1236	1286	1396	1377	1783	1673	1909

P.E.D. product designed and produced in conformity to the article 4.3 of directive 2014/68/UE - ErP Ecodesgin directive 2009/125/CE

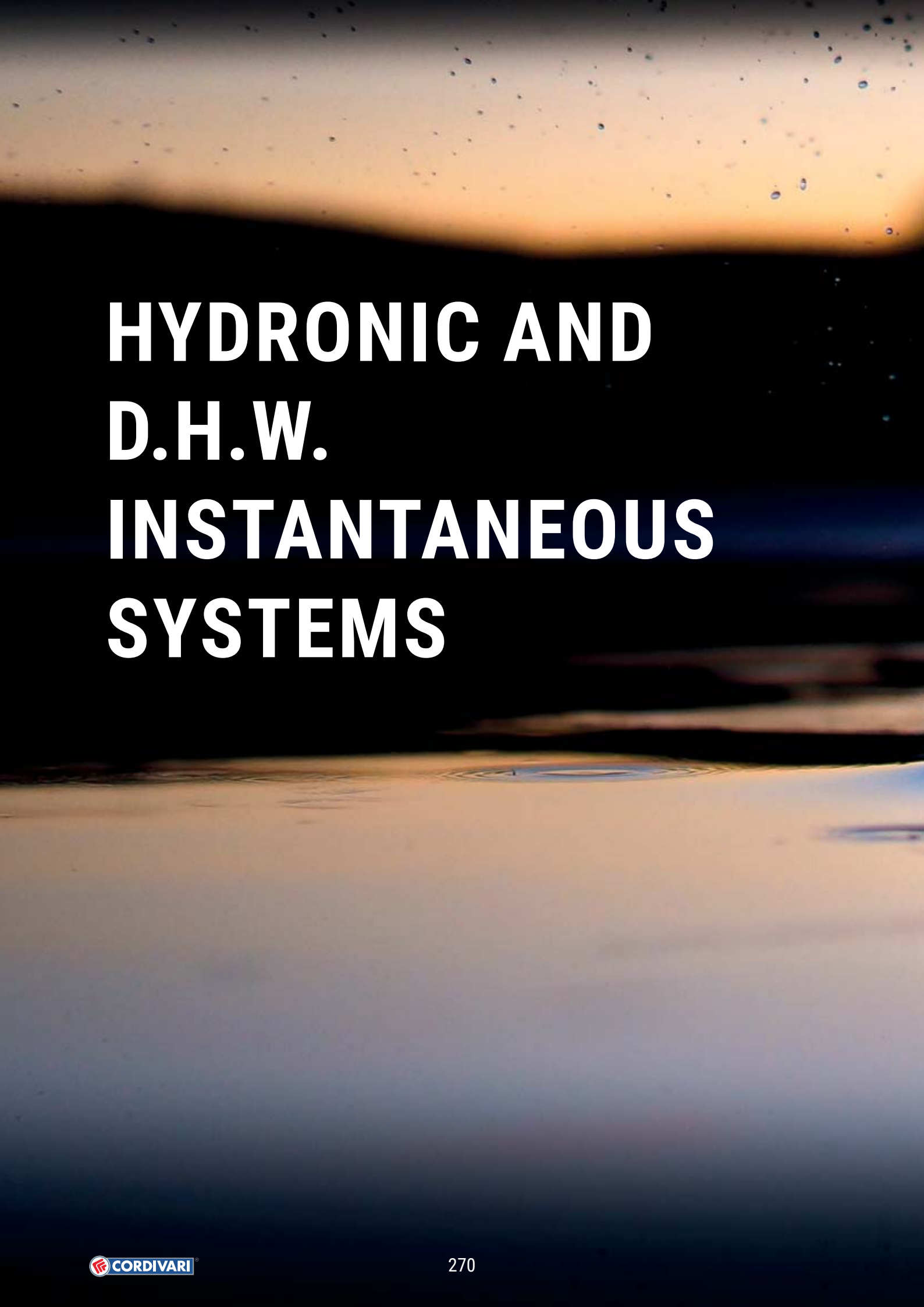

HYDRONIC AND D.H.W. INSTANTANEOUS SYSTEMS



PLATE HEAT EXCHANGER



Cordivari plate heat exchangers, are offering now a complete range of solutions for domestic, residential and commercial applications. A wide and flexible proposal, both for brazed exchangers of small dimensions, or plate-to-plate exchangers for heat exchange. New range of exchangers, thanks to various dimensions and types, connections from DN32 to DN100, different and with extended working pressure limits, allows to meet any plant requirements or plumbing needs. From small single-family house sourced by boiler or pellet stove, to big plants, every installation finds today the most suitable Cordivari solution thanks to the new on-line professional dimensioning tool, where you can always find the best performing solution and as well the most economical.

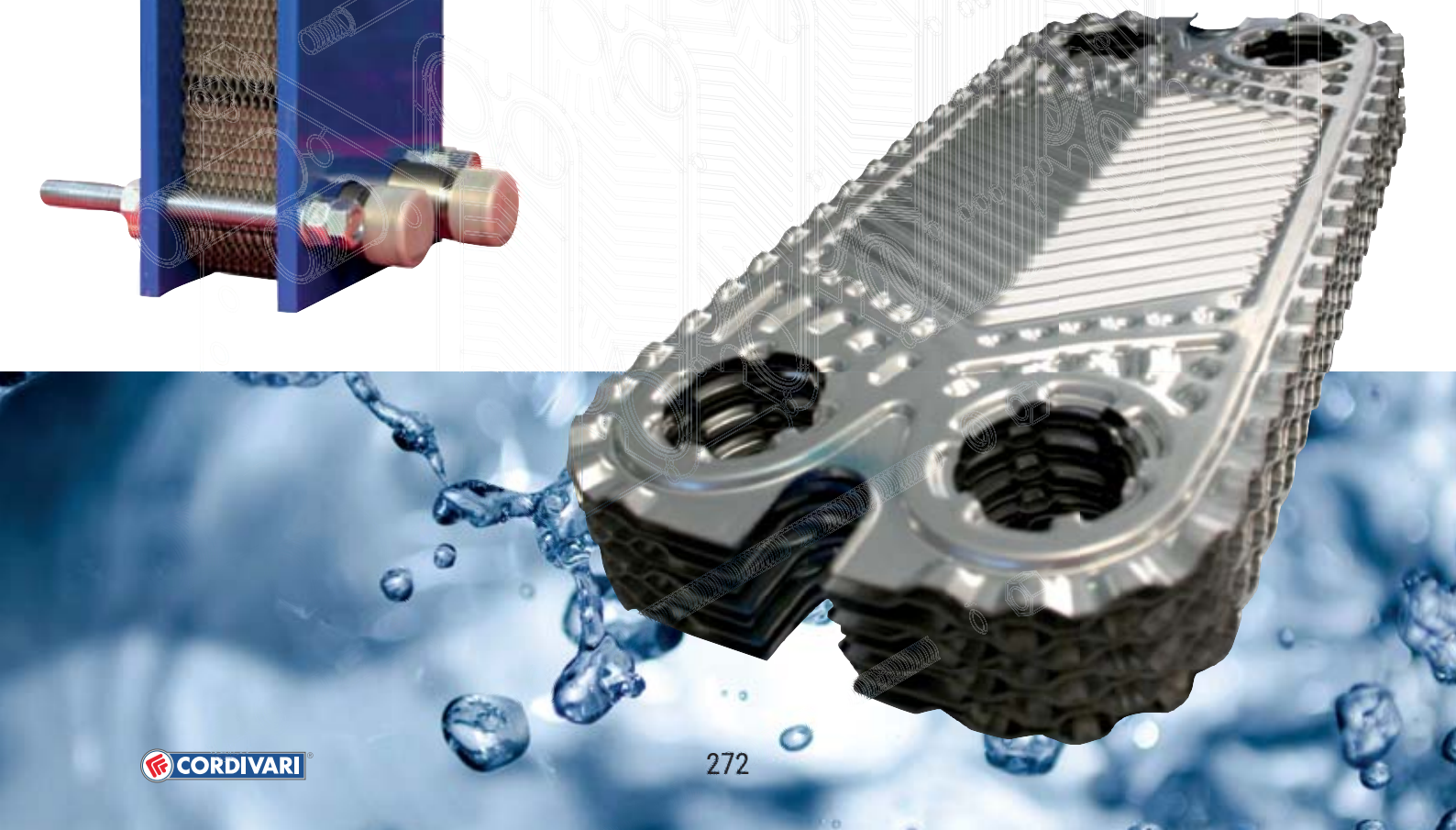

NEW PHC INSPECTABLE PLATE HEAT EXCHANGERS

PHC heat exchangers are used in all domestic and industrial installations where a fluid exchange is required.
They are suitable for D.H.W production, (immediate or with a storage tank), for the heating of swimming pools using different energy sources (traditional boiler, biomass, solar thermal systems). PHC heat exchangers can also be applied in district heating installations, in heat recovery systems, for the hydraulic separation of installations.
The new range offers 6 main models that combines the variability of the plates number, of the gaskets, of the working pressure limits, which allows to meet any plant requirements or plumbing needs.
Being inspectable, the PHC exchangers are recommended for all plants where an efficient but flexible heat exchanger is required, allowing easily maintenance and cleaning.
PHC exchangers are designed for all applications stated on Art. 4.3 of the Pressure Equipment Directive (P.E.D.) 2014/68/UE.



NEW SLB BRAZED PLATE HEAT EXCHANGERS



New SLB Plate Heat Exchangers provide the most compact and economical solution in all domestic and industrial installations, where a heat exchange is required.
The technology is based on the joining by 99% pure copper brazing of multiple Stainless steel 316L plates.
The new range offers 4 main models available in insulated or not-insulated version, designed to satisfy all possible thermal exchange needs.
SLB Heat Exchangers are designed for D.H.W. production or for heating , refrigeration, evaporation, industrial processing, cooling.

ON-LINE PLATE EXCHANGERS TOOL

ON-LINE SOFTWARE TO SIZE THE CORDIVARI PLATE EXCHANGERS

A PROFESSIONAL TOOL:
USER FRIENDLY, FAST AND FOR FREE

http://www.cordivari.com/configurator_plate_exchangers

CORDIVARI

EXCHANGERS **PHC**

INSPECTIONABLE PLATE TO PLATE HEAT EXCHANGER



APPLICATION

PHC Heat exchangers are used in domestic and industrial installations. In particular they're suitable for production of D.H.W., as well as for heating of swimming pools, using different energy sources (traditional boiler, solid fuel, solar thermal systems). For domestic application, the PHC are suitable for district heating installations.

MATERIAL

- Frame (not in contact with fluids) in painted mild steel
- Guide for Heat exchanger plates, bolts and screw nuts (not in contact with fluids) in galvanized mild steel
- Nipples and plates (in contact with fluid) in Stainless steel 316L
- EPDM Gaskets.

TECHNICAL DESCRIPTION

PHC exchangers are inspectionable plate to plate type. Their shape ensures the possibility of opening the exchanger for cleaning.
The modular design allows you to change the configuration of the exchanger even after a period of use (within certain limits).

PHC exchangers are designed for the use stated on Art. 3.3 of PED 97/23/CE. In particular, they are intended to be used with non-dangerous liquids with steam pressure at maximum operating temperature not exceeding 0.5 bar above normal atmospheric pressure. Every Exchanger has serial number, label and end-user manual.

CHEMICAL COMPATIBILITY

Material used for PHC Exchangers are suitable for following liquids:
• Water • Swimming pool water • Milk • Whisky • Acetone • Glycole • Glycoled Water • Mineral Water • Wine • Wine Vinegar • Etanol • Etilenic Glycole• Demineralized Water • Acetic Acid • Beer • Liquors• Methanol • Propylenic Glycol

WORKING CONDITIONS

Max pressure	Max temperature
10/16 bar	140 °C (*)

(*) Is intended as maximum working temperature of Gaskets. The maximum operating temperature must be lower between those corresponding to the vapor pressure of 0.5 bar above the pressure in normal atmospheres considered for two circulating fluids. For a use of temperatures above 110 °C please see the TECHNICAL SUPPORT section

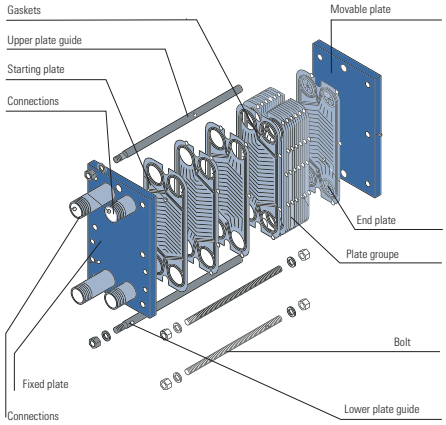

EXCHANGERS **PHC 3120 - DN32**

EXCHANGERS PHC 3120 (PN16 VERSION ON REQUEST)

STOCK AVAILABILITY

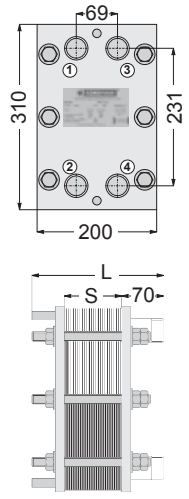

Connections
DN32 (1"1/4) M

1	Primary Inlet
2	Primary Outlet
3	Secondary Outlet
4	Secondary Inlet

N° of plates	With EPDM gaskets PN10 VERSION Art. Nr.	PN16 VERSION	With NBR gaskets PN10 VERSION Art. Nr.	PN16 VERSION	S Fixing quote [mm]	L [mm]	Primary Vol. = Secondary Vol. [lt]
9	3175056654151		3175056654121		27		0,20
11	3175056654152		3175056654122		33		0,25
13	3175056654153		3175056654123		39		0,30
15	3175056654154		3175056654124		45		0,35
17	3175056654155		3175056654125		51		0,40
19	3175056654156		3175056654126		57	220	0,45
21	3175056654157		3175056654127		63		0,50
23	3175056654158		3175056654128		69		0,55
25	3175056654159		3175056654129		75		0,60
27	3175056654160		3175056654130		81		0,65
29	3175056654161		3175056654131		87		0,70
31	3175056654162		3175056654132		93		0,75
33	3175056654163		3175056654133		99		0,80
35	3175056654164		3175056654134		105		0,85
37	3175056654165	with surcharge	3175056654135	with surcharge	111		0,90
39	3175056654166		3175056654136		117		0,95
41	3175056654167		3175056654137		123		1,00
43	3175056654168		3175056654138		129		1,05
45	3175056654169		3175056654139		135		1,10
47	3175056654170		3175056654140		141		1,15
49	3175056654171		3175056654141		147		1,20
51	3175056654172		3175056654142		153	370	1,25
53	3175056654173		3175056654143		159		1,30
55	3175056654174		3175056654144		165		1,35
57	3175056654175		3175056654145		171		1,40
59	3175056654176		3175056654146		177		1,45
61	3175056654177		3175056654147		183		1,50
63	3175056654178		3175056654148		189		1,55
65	3175056654179		3175056654149		195		1,60
67	3175056654180		3175056654150		201		1,65

For operating conditions please consult our online tool **www.cordivari.com/configurator_plate_exchangers**

EXCHANGERS **PHC 4620 - DN32**

INSPECTIONABLE PLATE TO PLATE HEAT EXCHANGER

STOCK AVAILABILITY

EXCHANGERS PHC 4620 (PN16 VERSION ON REQUEST)

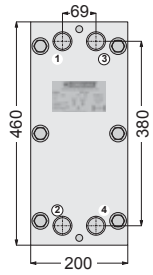

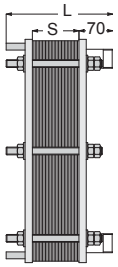

Connections
DN32 (1"1/4) M

1	Primary Inlet
2	Primary Outlet
3	Secondary Outlet
4	Secondary Inlet

N° of plates	With EPDM gaskets PN10 VERSION Art. Nr.	PN16 VERSION	With NBR gaskets PN10 VERSION Art. Nr.	PN16 VERSION	S Fixing quote [mm]	L [mm]	Primary Vol. = Secondary Vol. [lt]
9	3175056654271		3175056654241		27	220	0,36
11	3175056654272		3175056654242		33		0,45
13	3175056654273		3175056654243		39		0,54
15	3175056654274		3175056654244		45		0,63
17	3175056654275		3175056654245		51		0,72
19	3175056654276		3175056654246		57		0,81
21	3175056654277		3175056654247		63		0,90
23	3175056654278		3175056654248		69		0,99
25	3175056654279		3175056654249		75		1,08
27	3175056654280		3175056654250		81		1,17
29	3175056654281		3175056654251		87		1,26
31	3175056654282		3175056654252		93		1,35
33	3175056654283		3175056654253		99	370	1,44
35	3175056654284		3175056654254		105		1,53
37	3175056654285	**with**	3175056654255	**with**	111		1,62
39	3175056654286	**surcharge**	3175056654256	**surcharge**	117		1,71
41	3175056654287		3175056654257		123		1,80
43	3175056654288		3175056654258		129		1,89
45	3175056654289		3175056654259		135		1,98
47	3175056654290		3175056654260		141		2,07
49	3175056654291		3175056654261		147		2,16
51	3175056654292		3175056654262		153		2,25
53	3175056654293		3175056654263		159		2,34
55	3175056654294		3175056654264		165		2,43
57	3175056654295		3175056654265		171		2,52
59	3175056654296		3175056654266		177		2,61
61	3175056654297		3175056654267		183		2,70
63	3175056654298		3175056654268		189		2,79
65	3175056654299		3175056654269		195		2,88
67	3175056654300		3175056654270		201		2,97

For operating conditions please consult our online tool **www.cordivari.com/configurator_plate_exchangers**

EXCHANGERS **PHC 7420 - DN32**

STOCK AVAILABILITY

EXCHANGERS PHC 7420 (PN16 VERSION ON REQUEST)

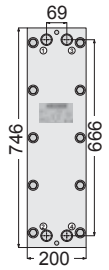

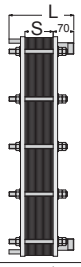

Connections
DN32 (1"1/4) M

1	Primary Inlet
2	Primary Outlet
3	Secondary Outlet
4	Secondary Inlet

N° of plates	With EPDM gaskets PN10 VERSION Art. Nr.	PN16 VERSION	With NBR gaskets PN10 VERSION Art. Nr.	PN16 VERSION	S Fixing quote [mm]	L [mm]	Primary Vol. = Secondary Vol. [lt]
9	3175056654391		3175056654361		27	220	0,68
11	3175056654392		3175056654362		33		0,85
13	3175056654393		3175056654363		39		1,02
15	3175056654394		3175056654364		45		1,19
17	3175056654395		3175056654365		51		1,36
19	3175056654396		3175056654366		57		1,53
21	3175056654397		3175056654367		63		1,70
23	3175056654398		3175056654368		69		1,87
25	3175056654399		3175056654369		75		2,04
27	3175056654400		3175056654370		81		2,21
29	3175056654401		3175056654371		87		2,38
31	3175056654402		3175056654372		93	370	2,55
33	3175056654403		3175056654373		99		2,72
35	3175056654404		3175056654374		105		2,89
37	3175056654405	**with**	3175056654375	**with**	111		3,06
39	3175056654406	**surcharge**	3175056654376	**surcharge**	117		3,23
41	3175056654407		3175056654377		123		3,40
43	3175056654408		3175056654378		129		3,57
45	3175056654409		3175056654379		135		3,74
47	3175056654410		3175056654380		141		3,91
49	3175056654411		3175056654381		147		4,08
51	3175056654412		3175056654382		153		4,25
53	3175056654413		3175056654383		159		4,42
55	3175056654414		3175056654384		165		4,59
57	3175056654415		3175056654385		171		4,76
59	3175056654416		3175056654386		177		4,93
61	3175056654417		3175056654387		183		5,10
63	3175056654418		3175056654388		189		5,27
65	3175056654419		3175056654389		195		5,44
67	3175056654420		3175056654390		201		5,61

For operating conditions please consult our online tool **www.cordivari.com/configurator_plate_exchangers**

EXCHANGERS **PHC 7431 - DN65**

INSPECTIONABLE PLATE TO PLATE HEAT EXCHANGER

EXCHANGERS PHC 7431 (PN16 VERSION ON REQUEST)

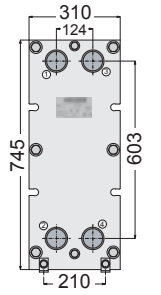

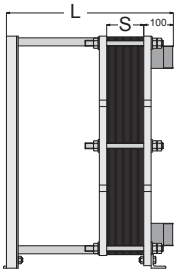

Connections
DN65 (2"1/2) M

1	Primary Inlet
2	Primary Outlet
3	Secondary Outlet
4	Secondary Inlet

N° of plates	With EPDM gaskets Art. Nr.	PN16 VERSION	With NBR gaskets Art. Nr.	PN16 VERSION	S Fixing quote [mm]	L [mm]	Primary Vol. = Secondary Vol. [lt]
13	3175056654533		3175056654481		44	405	2,16
15	3175056654534		3175056654482		51		2,52
17	3175056654535		3175056654483		58		2,88
19	3175056654536		3175056654484		65		3,24
21	3175056654537		3175056654485		71		3,60
23	3175056654538		3175056654486		78		3,96
25	3175056654539		3175056654487		85		4,32
27	3175056654540		3175056654488		92		4,68
29	3175056654541		3175056654489		99	505	5,04
31	3175056654542		3175056654490		105		5,40
33	3175056654543		3175056654491		112		5,76
35	3175056654544		3175056654492		119		6,12
37	3175056654545		3175056654493		126		6,48
39	3175056654546		3175056654494		133		6,84
41	3175056654547		3175056654495		139		7,20
43	3175056654548		3175056654496		146		7,56
45	3175056654549		3175056654497		153		7,92
47	3175056654550		3175056654498		160	605	8,28
49	3175056654551		3175056654499		167		8,64
51	3175056654552		3175056654500		173		9,00
53	3175056654553		3175056654501		180		9,36
55	3175056654554		3175056654502		187		9,72
57	3175056654555		3175056654503		194		10,08
59	3175056654556		3175056654504		201		10,44
61	3175056654557		3175056654505		207		10,80
63	3175056654558	**with surcharge**	3175056654506	**with surcharge**	214		11,16
65	3175056654559		3175056654507		221		11,52
67	3175056654560		3175056654508		228	855	11,88
69	3175056654561		3175056654509		235		12,24
71	3175056654562		3175056654510		241		12,60
73	3175056654563		3175056654511		248		12,96
75	3175056654564		3175056654512		255		13,32
77	3175056654565		3175056654513		262		13,68
79	3175056654566		3175056654514		269		14,04
81	3175056654567		3175056654515		275		14,40
83	3175056654568		3175056654516		282		14,76
85	3175056654569		3175056654517		289		15,12
87	3175056654570		3175056654518		296		15,48
89	3175056654571		3175056654519		303		15,84
91	3175056654572		3175056654520		309		16,20
93	3175056654573		3175056654521		316		16,56
95	3175056654574		3175056654522		323		16,92
97	3175056654575		3175056654523		330		17,28
99	3175056654576		3175056654524		337		17,64
101	3175056654577		3175056654525		343		18,00
103	3175056654578		3175056654526		350		18,36
105	3175056654579		3175056654527		357		18,72
107	3175056654580		3175056654528		364		19,08
109	3175056654581		3175056654529		371		19,44
111	3175056654582		3175056654530		377		19,80
113	3175056654583		3175056654531		384		20,16
115	3175056654584		3175056654532		391		20,52

On request configurations available up to a maximum of 259 plates. With surcharge for each additional plate with EPDM gasket.

On request configurations available up to a maximum of 259 plates. With surcharge for each additional plate with NBR gasket.

For operating conditions please consult our online tool **www.cordivari.com/configurator_plate_exchangers**

EXCHANGERS **PHC 8031 - DN50**

INSPECTIONABLE PLATE TO PLATE HEAT EXCHANGER

STOCK AVAILABILITY

EXCHANGERS PHC 8031 (PN16 VERSION ON REQUEST)

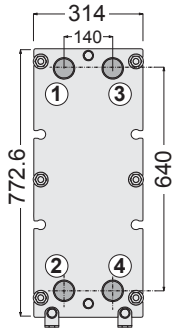

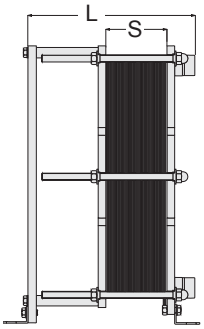

Connections
DN50 (2") M

1	Primary Inlet
2	Primary Outlet
3	Secondary Outlet
4	Secondary Inlet

N° of plates	With EPDM gaskets Art. Nr.	PN16 VERSION	With NBR gaskets Art. Nr.	PN16 VERSION	S Fixing quote [mm]	L [mm]	Primary Vol. = Secondary Vol. [lt]
13	3175056654741		3175056654689		46	405	2,28
15	3175056654742		3175056654690		53		2,66
17	3175056654743		3175056654691		60		3,04
19	3175056654744		3175056654692		67		3,42
21	3175056654745		3175056654693		74		3,80
23	3175056654746		3175056654694		81		4,18
25	3175056654747		3175056654695		88		4,56
27	3175056654748		3175056654696		95		4,94
29	3175056654749		3175056654697		102	505	5,32
31	3175056654750		3175056654698		109		5,70
33	3175056654751		3175056654699		116		6,08
35	3175056654752		3175056654700		123		6,46
37	3175056654753		3175056654701		130		6,84
39	3175056654754		3175056654702		137		7,22
41	3175056654755		3175056654703		144		7,60
43	3175056654756		3175056654704		151		7,98
45	3175056654757		3175056654705		158		8,36
47	3175056654758		3175056654706		165	605	8,74
49	3175056654759		3175056654707		172		9,12
51	3175056654760		3175056654708		179		9,50
53	3175056654761		3175056654709		186		9,88
55	3175056654762		3175056654710		193		10,26
57	3175056654763		3175056654711		200		10,64
59	3175056654764		3175056654712		207		11,02
61	3175056654765		3175056654713		214		11,40
63	3175056654766	**with surcharge**	3175056654714	**with surcharge**	221		11,78
65	3175056654767		3175056654715		228		12,16
67	3175056654768		3175056654716		235	855	12,54
69	3175056654769		3175056654717		242		12,92
71	3175056654770		3175056654718		249		13,30
73	3175056654771		3175056654719		256		13,68
75	3175056654772		3175056654720		263		14,06
77	3175056654773		3175056654721		270		14,44
79	3175056654774		3175056654722		277		14,82
81	3175056654775		3175056654723		284		15,20
83	3175056654776		3175056654724		291		15,58
85	3175056654777		3175056654725		298		15,96
87	3175056654778		3175056654726		305		16,34
89	3175056654779		3175056654727		312		16,72
91	3175056654780		3175056654728		319		17,10
93	3175056654781		3175056654729		326		17,48
95	3175056654782		3175056654730		333		17,86
97	3175056654783		3175056654731		340		18,24
99	3175056654784		3175056654732		347		18,62
101	3175056654785		3175056654733		354		19,00
103	3175056654786		3175056654734		361		19,38
105	3175056654787		3175056654735		368		19,76
107	3175056654788		3175056654736		375		20,14
109	3175056654789		3175056654737		382		20,52
111	3175056654790		3175056654738		389		20,90
113	3175056654791		3175056654739		396		21,28
115	3175056654792		3175056654740		403		21,66

On request configurations available up to a maximum of 205 plates. With surcharge for each additional plate with EPDM gasket.

On request configurations available up to a maximum of 205 plates. With surcharge for each additional plate with NBR gasket.

For operating conditions please consult our online tool **www.cordivari.com/configurator_plate_exchangers**

EXCHANGERS **PHC 12046 - DN100**

INSPECTIONABLE PLATE TO PLATE HEAT EXCHANGER

EXCHANGERS PHC 12046 (PN16 VERSION ON REQUEST)

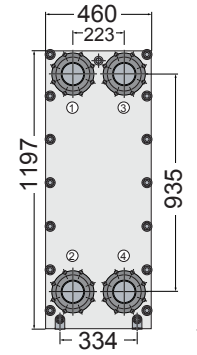

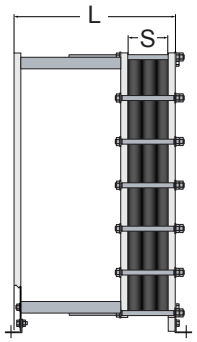

Connections
DN100 PN16 FLANGED

1	Primary Inlet
2	Primary Outlet
3	Secondary Outlet
4	Secondary Inlet

N° of plates	With EPDM gaskets Art. Nr.	PN16 VERSION	With NBR gaskets Art. Nr.	PN16 VERSION	S Fixing quote [mm]	L [mm]	Primary Vol. = Secondary Vol. [lt]
13	3175056654949		3175056654897		40		5,07
15	3175056654950		3175056654898		47		5,92
17	3175056654951		3175056654899		53		6,76
19	3175056654952		3175056654900		59		7,61
21	3175056654953		3175056654901		65		8,45
23	3175056654954		3175056654902		71		9,30
25	3175056654955		3175056654903		78		10,14
27	3175056654956		3175056654904		84		10,99
29	3175056654957		3175056654905		90		11,83
31	3175056654958		3175056654906		96		12,68
33	3175056654959		3175056654907		102		13,52
35	3175056654960		3175056654908		109		14,37
37	3175056654961		3175056654909		115	550	15,21
39	3175056654962		3175056654910		121		16,06
41	3175056654963		3175056654911		127		16,90
43	3175056654964		3175056654912		133		17,75
45	3175056654965		3175056654913		140		18,59
47	3175056654966		3175056654914		146		19,44
49	3175056654967		3175056654915		152		20,28
51	3175056654968		3175056654916		158		21,13
53	3175056654969		3175056654917		164		21,97
55	3175056654970		3175056654918		171		22,82
57	3175056654971		3175056654919		177		23,66
59	3175056654972		3175056654920		183		24,51
61	3175056654973		3175056654921		189		25,35
63	3175056654974	**with surcharge**	3175056654922	**with surcharge**	195		26,20
65	3175056654975		3175056654923		202		27,04
67	3175056654976		3175056654924		208		27,89
69	3175056654977		3175056654925		214		28,73
71	3175056654978		3175056654926		220		29,58
73	3175056654979		3175056654927		226		30,42
75	3175056654980		3175056654928		233		31,27
77	3175056654981		3175056654929		239		32,11
79	3175056654982		3175056654930		245		32,96
81	3175056654983		3175056654931		251		33,80
83	3175056654984		3175056654932		257		34,65
85	3175056654985		3175056654933		264		35,49
87	3175056654986		3175056654934		270		36,34
89	3175056654987		3175056654935		276	710	37,18
91	3175056654988		3175056654936		282		38,03
93	3175056654989		3175056654937		288		38,87
95	3175056654990		3175056654938		295		39,72
97	3175056654991		3175056654939		301		40,56
99	3175056654992		3175056654940		307		41,41
101	3175056654993		3175056654941		313		42,25
103	3175056654994		3175056654942		319		43,10
105	3175056654995		3175056654943		326		43,94
107	3175056654996		3175056654944		332		44,79
109	3175056654997		3175056654945		338		45,63
111	3175056654998		3175056654946		344		46,48
113	3175056654999		3175056654947		350		47,32
115	3175056655000		3175056654948		357		48,17

On request configurations available up to a maximum of 213 plates. With surcharge for each additional plate with EPDM gasket.

On request configurations available up to a maximum of 213 plates. With surcharge for each additional plate with NBR gasket.

For operating conditions please consult our online tool **www.cordivari.com/configurator_plate_exchangers**

ON-LINE PLATE EXCHANGERS TOOL

On-line Software to size the Cordivari plate exchangers



A professional tool:
User friendly, fast and for free

www.cordivari.com/configurator_plate_exchangers

DO YOUR CORDIVARI PLATE EXCHANGER SIZING

Few clicks and you'll get your tailored product everywhere and free of charge. You can download your report, or save it on your log in area at www.cordivari.com.

Try it now!



BRAZED PLATE EXCHANGERS **SLB 15**

BRAZED PLATE EXCHANGERS



TECHNICAL DESCRIPTION
New brazed Plate Exchangers SLB Cordivari, provides the most compact and economical solution suitable for many applications.
The SLB plate exchangers are designed for different needs in heating, refrigeration, evaporation, industrial processing, cooling.

MAIN ADVANTAGES
- High Efficiency
- Long lifetime
- Savings
- High reliability
- Huge possibility to modify the relation between storage volume and Heat exchange.

TECHNICAL CHARACTERISTIC :
Stainless steel AISI 316L brazed plate, braze-welded with 99,99% pure copper

WORKING CONDITIONS

Max pressure	Max temperature
10 bar	190 °C (*)

(*) For temperature above 110°C, see TECHNICAL SUPPORT CHAPTER

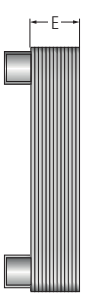

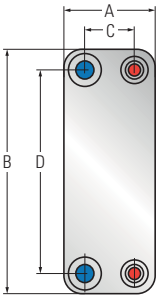

Connections 3/4" M		Max. Flow Rate
	[mm]	[m³/h]
A	74	3,6
B	207	
C	42	
D	172	





STOCK AVAILABILITY

N° of plates	**NOT INSULATED** VERSION Art. Nr.	**INSULATED** VERSION Art. Nr.	E [mm]	Weight [Kg]
10	5250410010008	5250410011008	25	0,62
20	5250410010009	5250410011009	47	1,02
30	5250410010010	5250410011010	70	1,42
40	5250410010011	5250410011011	93	1,82

PERFORMANCE DATA *(PRIMARY AND SECONDARY FLUID, WATER, PRESSURE LOSS < 50 KPA)*

N° of plates	Thermal output exchanged	**Primary 80/70 °C** Primary flow rate	**Secondary 60/70 °C** Secondary flow rate
	[KW]	[m³ /h]	[m³/h]
10	5	0,442	0,440
20	15	1,326	1,320
30	24	2,121	2,112
40	32	2,828	2,816

N° of plates	Thermal output exchanged	**Primary 80/65 °C** Primary flow rate	**Secondary 60/70 °C** Secondary flow rate
	[KW]	[m³ /h]	[m³/h]
10	1,5	0,088	0,132
20	4	0,235	0,352
30	7	0,412	0,616
40	10	0,588	0,880

N° of plates	Thermal output exchanged	**Primary 80/65 °C** Primary flow rate	**Secondary 55/70 °C** Secondary flow rate
	[KW]	[m³ /h]	[m³/h]
10	3	0,177	0,176
20	7	0,412	0,410
30	12	0,706	0,703
40	17	1,000	0,996

N° of plates	Thermal output exchanged	**Primary 80/65 °C** Primary flow rate	**Secondary 10/60 °C** Secondary flow rate
	[KW]	[m³ /h]	[m³/h]
10	21	1,236	0,364
20	45	2,648	0,781
30	60	3,531	1,041
40	71	4,178	1,232

N° of plates	Thermal output exchanged	**Primary 80/60 °C** Primary flow rate	**Secondary 10/50 °C** Secondary flow rate
	[KW]	[m³ /h]	[m³/h]
10	28	1,235	0,606
20	58	2,557	1,255
30	80	3,527	1,731
40	95	4,189	2,056

N° of plates	Thermal output exchanged	**Primary 70/60 °C** Primary flow rate	**Secondary 10/50 °C** Secondary flow rate
	[KW]	[m³ /h]	[m³/h]
10	16	1,408	0,346
20	30	2,640	0,649
30	40	3,521	0,866
40	47	4,137	1,017

N° of plates	Thermal output exchanged	**Primary 65/50 °C** Primary flow rate	**Secondary 10/50 °C** Secondary flow rate
	[KW]	[m³ /h]	[m³/h]
10	10	0,585	0,216
20	24	1,403	0,519
30	38	2,221	0,822
40	55	3,215	1,190

N° of plates	Thermal output exchanged	**Primary 60/40 °C** Primary flow rate	**Secondary 10/50 °C** Secondary flow rate
	[KW]	[m³ /h]	[m³/h]
10	10	0,585	0,216
20	24	1,403	0,519
30	38	2,221	0,822
40	55	3,215	1,190

BRAZED PLATE EXCHANGERS **SLB 20**
BRAZED PLATE EXCHANGERS



TECHNICAL DESCRIPTION
New brazed Plate Exchangers SLB Cordivari, provides the most compact and economical solution suitable for many applications.
The SLB plate exchangers are designed for different needs in heating, refrigeration, evaporation, industrial processing, cooling.

MAIN ADVANTAGES
- High Efficiency
- Long lifetime
- Savings
- High reliability
- Huge possibility to modify the relation between storage volume and Heat exchange.

TECHNICAL CHARACTERISTIC :
Stainless steel AISI 316L brazed plate, braze-welded with 99,99% pure copper

WORKING CONDITIONS

Max pressure	Max temperature
10 bar	190 °C (*)

(*) For temperature above 110°C, see TECHNICAL SUPPORT CHAPTER

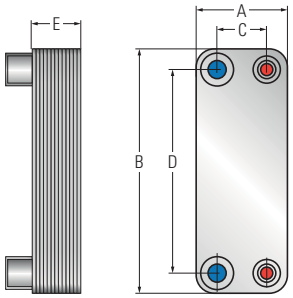

Connections 3/4" M		Max. Flow Rate
	[mm]	[m³/h]
A	73	3,6
B	311	
C	40	
D	278	





STOCK AVAILABILITY

N° of plates	**NOT INSULATED** VERSION Art. Nr.	**INSULATED** VERSION Art. Nr.	E [mm]	Weight [Kg]
12	5250410010001	5250410011001	37	1,10
16	5250410010002	5250410011002	46	1,13
20	5250410010003	5250410011003	55	1,16
24	5250410010004	5250410011004	64	1,19
30	5250410010005	5250410011005	78	1,24
34	5250410010006	5250410011006	87	1,27
40	5250410010007	5250410011007	101	1,32

PERFORMANCE DATA (*PRIMARY AND SECONDARY FLUID, WATER, PRESSURE LOSS < 50 KPA)*

		Primary 80/70 °C	**Secondary 60/70 °C**
N° of plates	Thermal output exchanged	Primary flow rate	Secondary flow rate
	[KW]	[m³ /h]	[m³/h]
12	10	0,884	0,880
16	16	1,414	1,408
20	20	1,768	1,760
24	24	2,121	2,112
30	30	2,651	2,640
34	33	2,916	2,904
40	37	3,270	3,257

		Primary 80/65 °C	**Secondary 60/70 °C**
N° of plates	Thermal output exchanged	Primary flow rate	Secondary flow rate
	[KW]	[m³ /h]	[m³/h]
12	11	0,647	0,968
16	16	0,941	1,408
20	20	1,177	1,760
24	24	1,412	2,112
30	30	1,765	2,640
34	34	2,001	2,992
40	37	2,177	3,257

		Primary 80/65 °C	**Secondary 55/70 °C**
N° of plates	Thermal output exchanged	Primary flow rate	Secondary flow rate
	[KW]	[m³ /h]	[m³/h]
12	16	0,941	0,938
16	24	1,412	1,406
20	30	1,765	1,758
24	36	2,118	2,110
30	45	2,648	2,637
34	50	2,942	2,930
40	55	3,236	3,223

		Primary 80/65 °C	**Secondary 10/60 °C**
N° of plates	Thermal output exchanged	Primary flow rate	Secondary flow rate
	[KW]	[m³ /h]	[m³/h]
12	24	1,412	0,417
16	35	2,059	0,607
20	45	2,648	0,781
24	52	3,060	0,902
30	60	3,531	1,041
34	65	3,825	1,128
40	71	4,178	1,232

		Primary 80/60 °C	**Secondary 10/50 °C**
N° of plates	Thermal output exchanged	Primary flow rate	Secondary flow rate
	[KW]	[m³ /h]	[m³/h]
12	28	1,235	0,606
16	38	1,676	0,822
20	46	2,028	0,996
24	52	2,293	1,125
30	62	2,734	1,342
34	66	2,910	1,428
40	71	3,131	1,537

		Primary 70/60 °C	**Secondary 10/50 °C**
N° of plates	Thermal output exchanged	Primary flow rate	Secondary flow rate
	[KW]	[m³ /h]	[m³/h]
12	18	1,584	0,390
16	24	2,112	0,519
20	30	2,640	0,649
24	35	3,080	0,757
30	40	3,521	0,866
34	44	3,873	0,952
40	47	4,137	1,017

		Primary 65/50 °C	**Secondary 10/50 °C**
N° of plates	Thermal output exchanged	Primary flow rate	Secondary flow rate
	[KW]	[m³ /h]	[m³/h]
12	13	0,760	0,281
16	18	1,052	0,390
20	24	1,403	0,519
24	30	1,754	0,649
30	38	2,221	0,822
34	44	2,572	0,952
40	54	3,157	1,169

		Primary 60/40 °C	**Secondary 10/50 °C**
N° of plates	Thermal output exchanged	Primary flow rate	Secondary flow rate
	[KW]	[m³ /h]	[m³/h]
12	4	0,175	0,087
16	6	0,262	0,130
20	8	0,350	0,173
24	10	0,437	0,216
30	12	0,524	0,260
34	14	0,612	0,303
40	17	0,743	0,368

BRAZED PLATE EXCHANGERS **SLB 30**

BRAZED PLATE EXCHANGERS



TECHNICAL DESCRIPTION
New brazed Plate Exchangers SLB Cordivari, provides the most compact and economical solution suitable for many applications.
The SLB plate exchangers are designed for different needs in heating, refrigeration, evaporation, industrial processing, cooling.

MAIN ADVANTAGES
- High Efficiency
- Long lifetime
- Savings
- High reliability
- Huge possibility to modify the relation between storage volume and Heat exchange.

TECHNICAL CHARACTERISTIC :
Stainless steel AISI 316L brazed plate, braze-welded with 99,99% pure copper

WORKING CONDITIONS

Max pressure	Max temperature
30 bar	190 °C (*)

(*) For temperature above 110°C, see TECHNICAL SUPPORT CHAPTER





STOCK AVAILABILITY

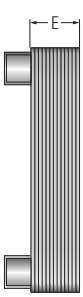

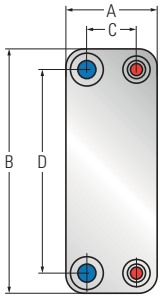

Connections 1" M		Max. Flow Rate
	[mm]	[m³/h]
A	106	8,1
B	306	
C	50	
D	250	

N° of plates	**NOT INSULATED** VERSION Art. Nr.	**INSULATED** VERSION Art. Nr.	E [mm]	Weight [Kg]
14	5250410010101	5250410011101	43	2,98
20	5250410010102	5250410011102	57	3,70
30	5250410010103	5250410011103	81	4,90
40	5250410010104	5250410011104	104	6,10
50	5250410010105	5250410011105	128	7,30

PERFORMANCE DATA *(PRIMARY AND SECONDARY FLUID, WATER, PRESSURE LOSS < 50 KPA)*

		Primary 80/70 °C	**Secondary 60/70 °C**
N° of plates	Thermal output exchanged	Primary flow rate	Secondary flow rate
	[KW]	[m³ /h]	[m³/h]
14	23	2,033	2,024
20	33	2,916	2,904
30	50	4,419	4,401
40	68	6,010	5,985
50	83	7,335	7,305

		Primary 80/65 °C	**Secondary 60/70 °C**
N° of plates	Thermal output exchanged	Primary flow rate	Secondary flow rate
	[KW]	[m³ /h]	[m³/h]
14	12	0,706	1,056
20	18	1,059	1,584
30	30	1,765	2,640
40	41	2,413	3,609
50	52	3,060	4,577

		Primary 80/65 °C	**Secondary 55/70 °C**
N° of plates	Thermal output exchanged	Primary flow rate	Secondary flow rate
	[KW]	[m³ /h]	[m³/h]
14	18	1,059	1,055
20	30	1,765	1,758
30	48	2,824	2,813
40	65	3,825	3,809
50	80	4,707	4,688

		Primary 80/65 °C	**Secondary 10/60 °C**
N° of plates	Thermal output exchanged	Primary flow rate	Secondary flow rate
	[KW]	[m³ /h]	[m³/h]
14	38	2,236	0,660
20	50	2,942	0,868
30	80	4,707	1,388
40	105	6,178	1,822
50	130	7,649	2,256

		Primary 80/60 °C	**Secondary 10/50 °C**
N° of plates	Thermal output exchanged	Primary flow rate	Secondary flow rate
	[KW]	[m³ /h]	[m³/h]
14	50	2,205	1,082
20	75	3,307	1,623
30	110	4,850	2,381
40	145	6,393	3,138
50	170	7,496	3,679

		Primary 70/60 °C	**Secondary 10/50 °C**
N° of plates	Thermal output exchanged	Primary flow rate	Secondary flow rate
	[KW]	[m³ /h]	[m³/h]
14	24	2,112	0,519
20	36	3,169	0,779
30	55	4,841	1,190
40	72	6,337	1,558
50	85	7,481	1,840

		Primary 65/50 °C	**Secondary 10/50 °C**
N° of plates	Thermal output exchanged	Primary flow rate	Secondary flow rate
	[KW]	[m³ /h]	[m³/h]
14	40	2,338	0,866
20	65	3,800	1,407
30	82	4,794	1,775
40	105	6,138	2,272
50	130	7,599	2,813

		Primary 60/40 °C	**Secondary 10/50 °C**
N° of plates	Thermal output exchanged	Primary flow rate	Secondary flow rate
	[KW]	[m³ /h]	[m³/h]
14	22	0,962	0,476
20	35	1,530	0,757
30	55	2,404	1,190
40	78	3,409	1,688
50	100	4,371	2,164

BRAZED PLATE EXCHANGERS **SLB 40**

BRAZED PLATE EXCHANGERS



TECHNICAL DESCRIPTION
New brazed Plate Exchangers SLB Cordivari, provides the most compact and economical solution suitable for many applications.
The SLB plate exchangers are designed for different needs in heating, refrigeration, evaporation, industrial processing, cooling.

MAIN ADVANTAGES
- High Efficiency
- Long lifetime
- Savings
- High reliability
- Huge possibility to modify the relation between storage volume and Heat exchange.

TECHNICAL CHARACTERISTIC :
Stainless steel AISI 316L brazed plate, braze-welded with 99,99% pure copper

WORKING CONDITIONS

Max pressure	Max temperature
30 bar	190 °C (*)

(*) For temperature above 110°C, see TECHNICAL SUPPORT CHAPTER

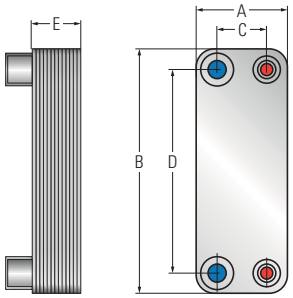

Connections 1" M		Max. Flow Rate
	[mm]	[m³/h]
A	106	12,7
B	466	
C	50	
D	466	





STOCK AVAILABILITY

N° of plates	**NOT INSULATED** VERSION Art. Nr.	**INSULATED** VERSION Art. Nr.	E [mm]	Weight [Kg]
30	5250410010201	5250410011201	81	8,3
40	5250410010202	5250410011202	104	10,2
50	5250410010203	5250410011203	128	12,1
60	5250410010204	5250410011204	151	14

PERFORMANCE DATA *(PRIMARY AND SECONDARY FLUID, WATER, PRESSURE LOSS < 50 KPA)*

		Primary 80/70 °C	**Secondary 60/70 °C**
N° of plates	Thermal output exchanged	Primary flow rate	Secondary flow rate
	[KW]	[m³ /h]	[m³/h]
30	43	3,800	3,785
40	57	5,037	5,017
50	71	6,275	6,249
60	83	7,335	7,305

		Primary 80/65 °C	**Secondary 60/70 °C**
N° of plates	Thermal output exchanged	Primary flow rate	Secondary flow rate
	[KW]	[m³ /h]	[m³/h]
30	42	3,712	3,697
40	55	4,861	4,841
50	70	6,186	6,161
60	82	7,247	7,217

		Primary 80/65 °C	**Secondary 55/70 °C**
N° of plates	Thermal output exchanged	Primary flow rate	Secondary flow rate
	[KW]	[m³ /h]	[m³/h]
30	64	3,766	3,750
40	85	5,002	4,981
50	105	6,178	6,153
60	122	7,179	7,149

		Primary 80/65 °C	**Secondary 10/60 °C**
N° of plates	Thermal output exchanged	Primary flow rate	Secondary flow rate
	[KW]	[m³ /h]	[m³/h]
30	68	4,001	1,180
40	88	5,178	1,527
50	105	6,178	1,822
60	128	7,532	2,222

		Primary 80/60 °C	**Secondary 10/50 °C**
N° of plates	Thermal output exchanged	Primary flow rate	Secondary flow rate
	[KW]	[m³ /h]	[m³/h]
30	90	3,968	1,948
40	120	5,291	2,597
50	145	6,393	3,138
60	170	7,496	3,679

		Primary 70/60 °C	**Secondary 10/50 °C**
N° of plates	Thermal output exchanged	Primary flow rate	Secondary flow rate
	[KW]	[m³ /h]	[m³/h]
30	45	3,961	0,974
40	60	5,281	1,299
50	72	6,337	1,558
60	85	7,481	1,840

		Primary 65/50 °C	**Secondary 10/50 °C**
N° of plates	Thermal output exchanged	Primary flow rate	Secondary flow rate
	[KW]	[m³ /h]	[m³/h]
30	65	3,800	1,407
40	88	5,144	1,904
50	110	6,430	2,381
60	125	7,307	2,705

		Primary 60/40 °C	**Secondary 10/50 °C**
N° of plates	Thermal output exchanged	Primary flow rate	Secondary flow rate
	[KW]	[m³ /h]	[m³/h]
30	90	3,933	1,948
40	120	5,245	2,597
50	145	6,337	3,138
60	170	7,430	3,679

PIASTRATERM® **SLB**

POLYWARM® COATED DOMESTIC HOT WATER ACCUMULATION TANK WITH STAINLESS STEEL BRAZED PLATE HEAT EXCHANGER





APPLICATION
Production and storage of domestic hot water (DHW).
MATERIAL
Mild steel Polywarm® coated (Attestation ACS - SSICA - DVGW - W270 - WRAS)
HEAT EXCHANGER
Insulated stainless steel 316L brazed plate heat exchanger.
INSULATION
Models 200 ÷ 500 (HARD): High thermal insulation with ecological hard polyurethane foam. Grey PVC external lining complete with top cover.
Models 800 ÷ 2000 (DISMOUNTABLE SOFT): NOFIRE® polyester fleece 100% made of recyclable material, with high thermal insulation. Fire resistance class B-s2d0 according to EN 13501. Grey PVC external lining.
CATHODE PROTECTION
Magnesium anode. Models > 1500 n° 2 magnesium anodes.

DRAIN
External confluence through drain connection. Models > 1000 external confluence through drain pipe.
GASKET- FLANGE PLATE
Silicone gaskets suitable for water intended for human consumption (tested according to 98/83/CE), max temperature up to 200°C. Mild steel inspection flange plate with Polywarm®.
WARRANTY
5 years - See general sales conditions and warranty
ACCESSORIES AND SPARE PARTS
See Accessories section for the entire list.


IMMEDIATE D.H.W. PRODUCTION


POLYWARM® COATED DHW STORAGE

PIASTRATERM® SLB WB - WC

ENERGY EFFICIENCY CLASS

Model		(WB) HARD FOAM insulation: 200 ÷ 300 / (WC) DISMOUNTABLE SOFT FLEECE insulation: 500 ÷ 2000					ErP
		Nr. of plates *(model SLB30)*					
		14	20	30	40	50	
200	Art. Nr.	3170161722201					B
300	Art. Nr.	3170161722211	3170161722212				C
500	Art. Nr.	3170161722221	3170161722222	3170161722223	3170161722224	3170161722225	C
800	Art. Nr.		3170161722232	3170161722233	3170161722234	3170161722235	C
1000	Art. Nr.			3170161722243	3170161722244	3170161722245	C
1500	Art. Nr.				3170161722254	3170161722255	C
2000	Art. Nr.					3170161722265	C
[°C] 80 10/45	Output [kW]	38	72	120	150	200	
	D.H.W. [lt/h]	887	1680	2801	3501	4668	
[°C] 65 10/45	Output [kW]	21	42	74	95	129	
	D.H.W. [lt/h]	483	972	1722	2228	3019	

ACCESSORIES

ELECTRIC IMMERSION HEATERS

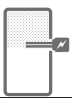

Mod.	Heated volume by electric immersion heater [lt]	MONOPHASE			THREEPHASE				
		1,5 kW	**2** kW	**3** kW	**4** kW	**5** kW	**6** kW	**9** kW	**12** kW
		5240000000051	5240000000052	5240000000053	5240000000047	5240000000048	5240000000049	5240000000050	5240000000031
		Ignition time from 10 °C to 45 °C with electric immersion heaters [min]			Ignition time from 10 °C to 45 °C with electric immersion heaters [min]				
200	49	87	65	44	//	//	//	//	//
300	76	136	102	68	//	//	//	//	//
500	127	228	171	114	//	//	//	//	//
800	178	318	239	159	//	//	//	//	//
1000	243	436	327	218	163	131	109	73	54
1500	288	516	387	258	194	155	129	86	65
2000	443	793	595	396	297	238	198	132	99

"Easy Control" Electronic Display-mounted on tank

ART. NR.	FOR MODELS
5005000310002	WC
5005000310003	WB



Thermometer

Art. Nr.
5032240000107
5 units box



Titanium electronic anode

Art. Nr.	Model
5200000000008	200, 300
5200000000009	500, 800
5200000000011	1000, 1500
5200000000013	2000



P.E.D. product designed and produced in conformity to the article 4.3 of directive 2014/68/UE - ErP Ecodesgin directive 2009/125/CE

PIASTRATERM® **SLB**

POLYWARM® COATED DOMESTIC HOT WATER ACCUMULATION TANK WITH STAINLESS STEEL BRAZED PLATE HEAT EXCHANGER

	STORAGE		HEAT EXCHANGER		D.H.W. HARDNESS
Model	Pmax	Tmax	Pmax	Tmax	F max
200 ÷ 1000	8 bar	90 °C	10 bar	99 °C	30 °f
1500 ÷ 2000	6 bar				

CORDIVARI Lab

TÜV Rheinland Energie und Umwelt GmbH states that test procedures and Cordivari LAB are certified conforming to European standard EN 15332, as indicated by Ecodesign ErP Directive.

TESTED ErP

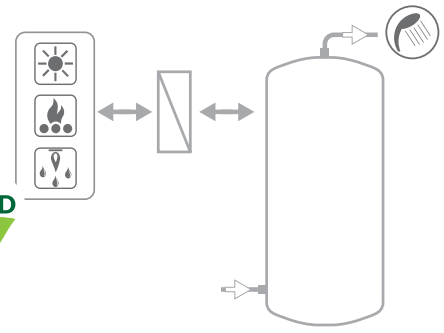

See TECHNICAL SUPPORT chapter for example of installation

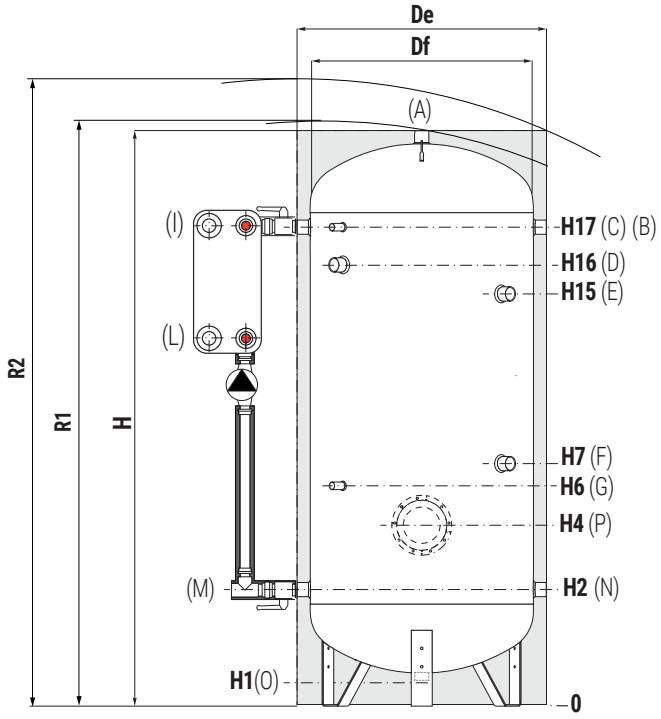

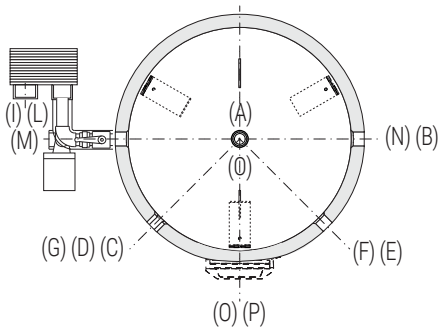

A	Domestic hot water outlet
B	Recirculation / Domestic hot water outlet
C	Connection for instrumentation 1/2" F
D	Connection for electric immersion heater
E	Connection for 2nd magnesium anode 1"1/4 F (only for models > 1500)
F	Connection for magnesium anode 1" 1/4 F
G	Connection for instrumentation 1/2" F
I	Primary Inlet 1" 1/4 F
L	Primary Outlet 1" 1/4 F
M	Domestic cold water circuit inlet
N	Alternative domestic cold water circuit inlet or connection for more boilers
O	Drain 1" 1/4 F. For model 1000 connection 1"1/2 F
P	Flange (only for models > 1000)

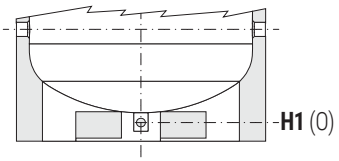

Models from 1500 to 5000 have two gripps on the bottom which allow the use of forklift when handling and drain pipe already fitted.

Model	Volume	De	DF	H	R1	R2	H1	H2	H4	H6	H7	H15	H16	H17	P	A	B M	D
	[lt]	[mm]														Connections F		
200	192	550	//	1449	//	1560	85	325	//	520	650	//	1075	1185	//	1"1/4	1"1/4	1"1/2
300	293	650	//	1499	//	1640	85	350	//	545	735	//	1100	1210	//	1"1/4	1"1/4	1"1/2
500	501	870	650	1891	1998	2090	101	416	//	611	801	//	1370	1526	//	1"1/4	1"1/4	1"1/2
800	792	970	750	2188	2220	2400	113	433	//	628	898	//	1638	1793	//	1"1/4	1"1/4	1"1/2
1000	1041	1070	850	2242	2270	2490	101	454	//	649	989	//	1660	1814	//	1"1/2	1"1/2	2"
1500	1443	1210	950	2440	2495	2730	109	440	525	635	1075	//	1895	2050	Øi170/Øe240	2"	1"1/2	2"
2000	1975	1360	1100	2492	2570	2850	91	467	542	652	842	1952	1877	2057	Øi170/Øe240	2"	2"	2"

P.E.D. product designed and produced in conformity to the article 4.3 of directive 2014/68/UE - ErP Ecodesgin directive 2009/125/CE

ELECTRONIC MACS® MODULE

MODULE FOR IMMEDIATE D.H.W. PRODUCTION WITH ELECTRONIC CONTROL UNIT



APPLICATION
MACS® module produces instantly D.H.W. with high flow rate.

EXCHANGER, MATERIAL
Copper primary pipes, Stainless steel 316L DHW sanitary circuit; brass fittings and valves.
Stainless steel 316L brazed plate heat exchanger.
PPE module case housing and insulating the exchangers circuits.

TECHNICAL DESCRIPTION
MACS® module produces instantly D.H.W. with high flow rate without storage.
Thanks to a variable flow rate on the primary the risk of limescale formation on the sanitary side is highly reduced

The immediate and fast production of D.H.W. granted by the external plate exchanger system allows the following benefits:
- reduced dimensions for DHW productions
- easy maintenance
- maximum hygiene for anti-legionellosis bacteria's
- to produce more DHW than the quantity obtained by water heater with similar capacity, thanks to the heating water stored at an higher temperature than DHW.

WARRANTY
2 years
See general sales conditions and warranty

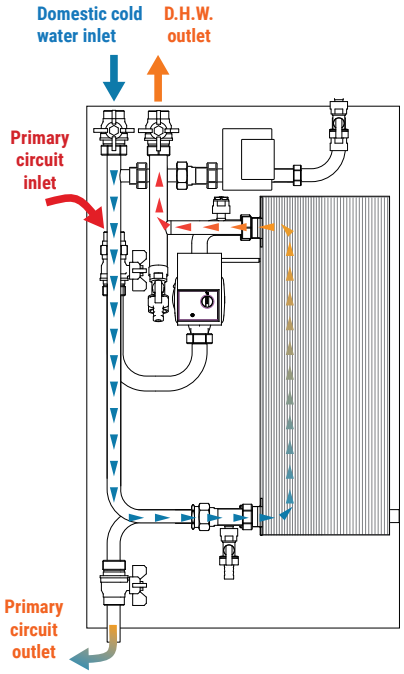

NEW- ELECTRONIC TEMPERATURE CONTROL

The MACS® module coupled to the thermal storage, produces immediate sanitary water (D.H.W) using the heat accumulated within the thermal storage, granting maximum hygiene and comfort thanks to the possibility of setting the return temperature.

ELECTRONIC MACS® MODULE

Output	Stainless steel 316L Plate Exchanger
[kW]	Art. Nr.
70	3316006700007
120	3316006700008

MACS® TECHNICAL DATA	70 Kw model	120 Kw model
Primary circuit maximium flow rate (inlet)	1.200 l/h	1620 l/h
D.H.W. maximium flow rate (outlet)	1.800 l/h ΔP 0,5 bar	3.000 l/h ΔP 0,5 bar
DHW station maximum flow rate	30 lt/min	50 lt/min
DHW production (at 10-45°C) with 70°C storage	24 lt/min	41 lt/min
Maximum working temperature	90 °C	90 °C
Maximum working pressure	6 bar	6 bar
Electrical supply	230 V AC, 93 W	230 V AC, 132 W
Minimal D.H.W. request to activate / disactivate MACS® station	1,5 l/m ± 0,5	1,5 l/m ± 0,5
Insulated D.H.W. case dimension (LxHxW)	L 400 x H 700 x P 260 mm	L 500 x H 905 x P 310 mm
Connections	¾" M	1" F / ¾" F
Exchanger model	SLB 20 / 34 plates	SLB 40 / 40 plates

Accessories on request

Art. Nr.
5221000000073
D.H.W. recirculation kit



The recirculation kit for Electronic MACS® module allows the implementation of a sanitary recirculation circuit on the system where modules are installed.
The main advantage of such sanitary recirculation circuit is to improve comfort and speed in achieving and enjoying the desired DHW temperature, reducing energy waste.
The control unit included as standard with the electronic MACS® modules allow the complete management of all settings of the recirculation circuit, such as temperature, setting etc.

ELECTRONIC MACS® MODULE

MODULE FOR IMMEDIATE D.H.W. PRODUCTION WITH ELECTRONIC CONTROL UNIT

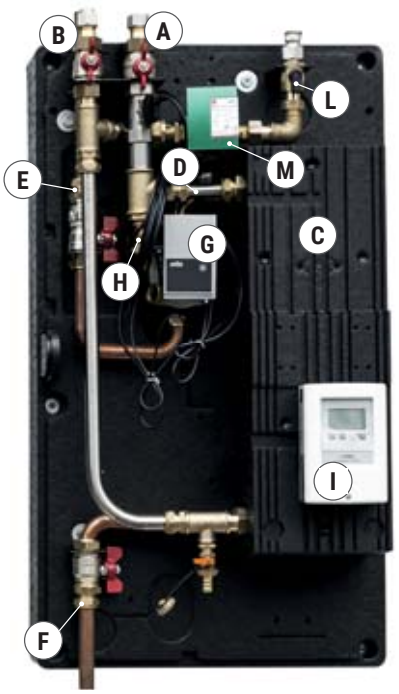

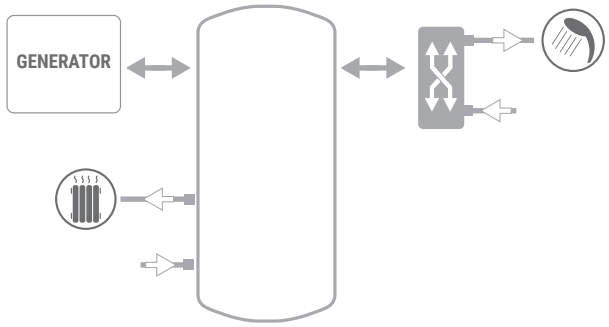

A	Domestic hot water outlet (DHW)	F	Primary Outlet
B	Domestic Water inlet	G	"Energy Savings" Circulation Pump
C	Stainless Steel Plate Exchanger	H	Valves In/Out for DHW
D	Flow rate/ temperature probe	I	Electronic control unit
E	Primary Inlet		

DHW recirculation kit for MACS® module (optional)

L	Connection for D.H.W. recirculation (optional)
M	D.H.W. recirculation pump (optional)

ELECTRONIC MACS® TECHNICAL DATA CHART

The curves shown in these charts allow to obtain the DHW flow rate that can be produced by the individual MACS® module according to the storage / primary circuit temperature (value on the horizontal axis).
The curves are parameterized based on the desired DHW temperature and indicate the maximum DHW flow rate that can be produced at that temperature (with cold water inlet temperature at 10°C)
The MACS modules can produce all the DHW flow rates included in the area between the minimum activation flow rate and maximum flow curve of each temperature.

120 Kw

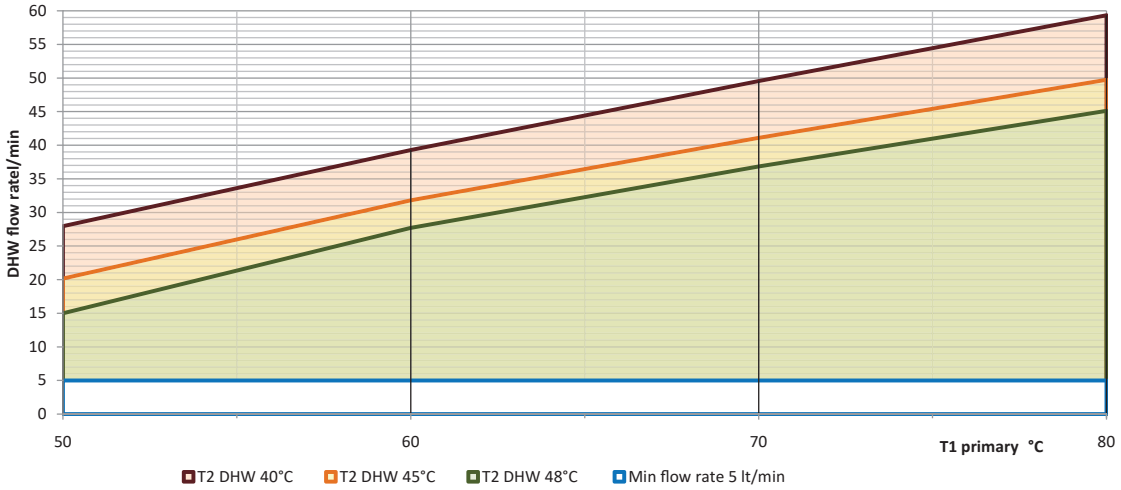

70 Kw

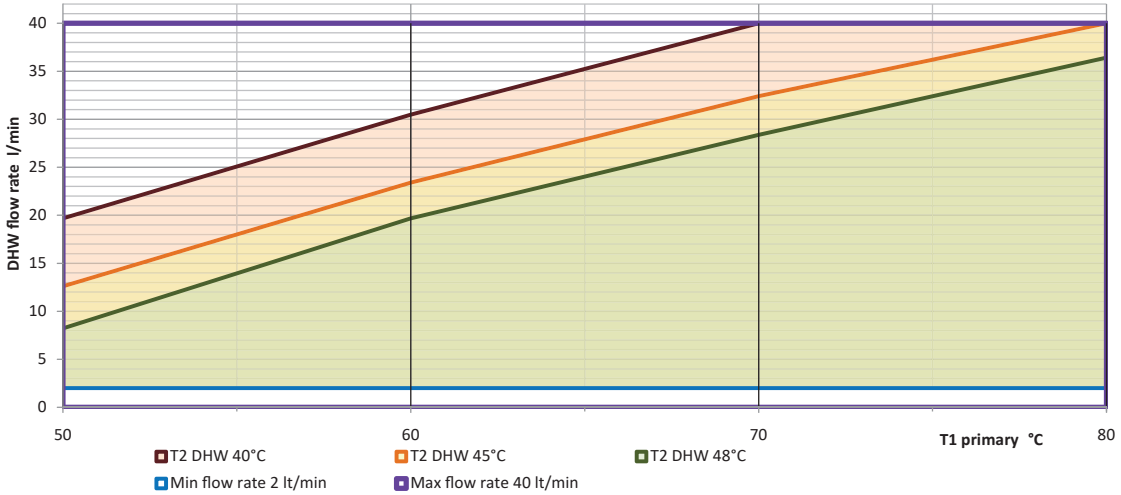

CASCADE **MACS® SYSTEM**

CASCADE MACS® SYSTEM WITH ELECTRONIC CONTROL UNIT FOR IMMEDIATE DHW PRODUCTION ON BIG INSTALLATIONS



APPLICATION
MACS® module produces instantly D.H.W. with high flow rate even if there is installed a small power thermal generator.

EXCHANGER, MATERIAL
Copper primary pipes, Stainless steel 316L DHW sanitary circuit; brass fittings and valves.
Stainless steel 316L brazed plate heat exchanger.
PPE module case housing and insulating the exchangers circuits.

TECHNICAL DESCRIPTION
The management of additional MACS® modules in cascade allows to meet high DHW requirements.
The complete system manages trough the electronic control unit, the working of each module following the DHW request from the users.
The cascade configuration can eventually also manage the link of the DHW recycling. The use of the MACS module in cascade takes all the benefits from the MACS module also in big installation swhere big DHW flows are needed to produce immediate DHW without the necessity to accumulate it.

WARRANTY
2 years
1 year electronical parts
See general sales conditions and warranty

CASCADE MACS® SYSTEM

N° of MACS® modules 120 kW	Total input	DHW flow rate	Stainless steel 316L Plate Exchanger
	[kW]	[lt/min]	Art. Nr.
x 2	240	100	3316006700015
x 3	360	150	3316006700016



CASCADE **MACS® SYSTEM**

CASCADE MACS® SYSTEM WITH ELECTRONIC CONTROL UNIT FOR IMMEDIATE DHW PRODUCTION ON BIG INSTALLATIONS

WITH 2 MACS® MODULES

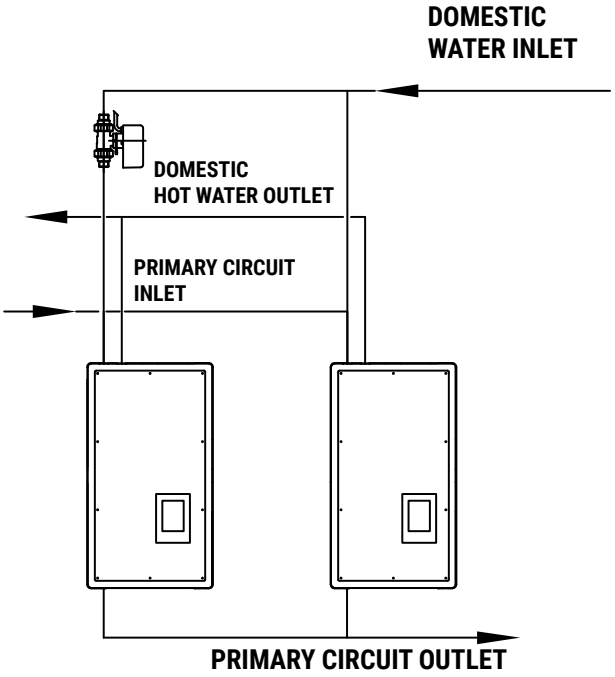

The system includes:

MACS® module - 120 kW



x 2

2-ways valve - 1”



x 1

WITH 3 MACS® MODULES

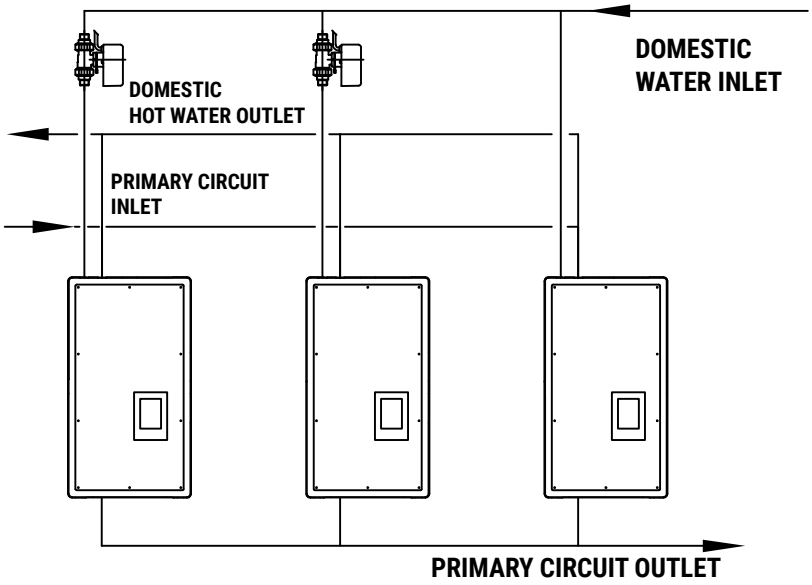

The system includes:

MACS® module - 120 kW



x 3

2-ways valve - 1”



x 2

PRS MODULE

MODULE FOR IMMEDIATE DHW PRODUCTION



DESCRIPTION

The new PRS modules are designed to rapidly prepare Domestic Hot Water for medium and large-scale facilities; they can work both with accumulation (semi-immediate mode) or without (immediate mode).

.

COMPONENTS

- Inspectable plate heat exchanger with steel structure and exchanger plates made in stainless steel AISI 316L with EPDM gaskets
- Single or double pump for primary circuit
- Motorized 3-way mixing valve
- Electrical control panel with control unit for programmation
- Temperature probes
- Galvanized steel frame
- 230V AC single phase supply.

OPTIONAL

- Insulation for the heat exchanger in aluminium and mineral wool (M0-A1 reaction to fire class)
- Data Logger

OPERATING CONDITIONS

Maximum Working pressure = 10 bar
Maximum temperature of the gaskets = 140 °C

WARRANTY

2 years – See general sales conditions and warranty on the Calorifiers catalogue in force.

NEW



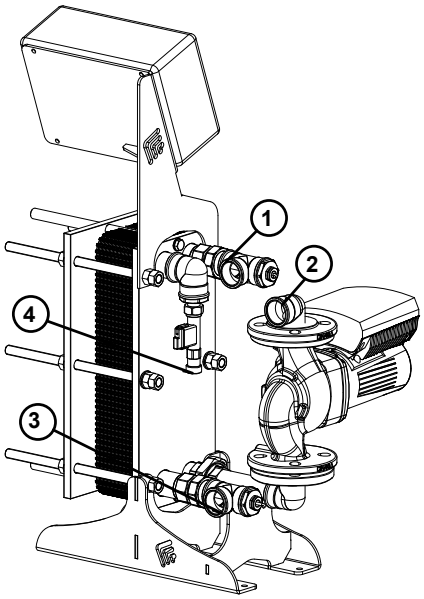

1	Primary Inlet
2	Primary Outlet
3	Domestic water inlet
4	Domestic hot water circuit outlet

FEATURES AND FUNCTIONS OF THE PRS CONTROL UNIT

- Back-lighted display with representation of graphs and texts
- Self-explanatory menu with captions
- Simple visualization of the measured values
- Temperature maintenance of the DHW inlet and of the DHW accumulation, set from the controller
- High operational efficiency thanks to the proportional control of primary pumps speed
- Performance of a series of anti-legionella disinfection cycles, schedulable at preferred time and day of the week, final result showed on the display
- DHW recirculation function control
- Analysis and monitoring of the system through statistics
- Computation of the exchanged heat, on a daily and weekly basis
- Diagnostic unit function for temperature and flow probes



ACCESSORIES

DATA LOGGER

Art. Nr.	
5755280000029	

- Remote monitoring
- Historical anti-legionella cycles data recording on Micro SD card
- Registration of the temperatures achieved in the system

Kit includes: 5 Vdc transformer, Micro SD card, CAN-bus cable, terminating resistors and wall plugs.

INSULATION

Art. Nr.	PRS Model
5655000020001	4620 (up to 31 plates)
5655000020002	4620 (up to 67 plates)
5655000020003	7420 (up to 29 plates)
5655000020004	7420 (up to 67 plates)
5655000020005	8031 (up to 47 plates)
5655000020006	8031 (from 49 to 57 plates)
Insulation for the exchanger made with mineral wool and aluminum case (M0-A1 reaction to fire class)	



PRS MODULE

MODULE FOR IMMEDIATE DHW PRODUCTION

MOD.	N° of Plates	P	H	L mod. HIGH temp.	L mod. LOW temp.
		[mm]			
4620 SINGLE PUMP	9	400	906	760	596
	13				
	17				
	21				
	25				
	29				
	33			780	617
	37				
	41				
	45				

MOD.	N° of Plates	P	H	L mod. HIGH temp.	L mod. LOW temp.
		[mm]			
7420 SINGLE PUMP	9	400	1192	760	596
	13				
	17				
	21				
	25				
	29				
	33			780	617
	37				
	41				
	45				

MOD.	N° of Plates	P	H	L mod. HIGH temp.	L mod. LOW temp.
		[mm]			
8031 SINGLE PUMP	13	493	1156	1085	990
	17				
	21				
	25	532		1091	996
	29	542		1111	1016
	33				
	37				
	41				
	45	545		1113	1018
	49			1363	1268
	53				
	57				

MOD.	N° of Plates	P	H	L mod. HIGH temp.	L mod. LOW temp.
		[mm]			
4620 DOUBLE PUMP	9	403	906	868	703
	13				
	17				
	21				
	25				
	29				
	33			888	724
	37				
	41				
	45				

MOD.	N° of Plates	P	H	L mod. HIGH temp.	L mod. LOW temp.
		[mm]			
7420 DOUBLE PUMP	9	403	1192	868	703
	13				
	17				
	21				
	25				
	29				
	33			888	724
	37				
	41				
	45				

MOD.	N° of Plates	P	H	L mod. HIGH temp.	L mod. LOW temp.
		[mm]			
8031 DOUBLE PUMP	13	535	1156	1205	1110
	17				
	21				
	25			1220	1125
	29				
	33				
	37				
	41	542		1236	1141
	45				
	49	551		1471	1376
	53				
	57				

PRS – FOR LOW TEMPERATURE SYSTEMS

with **DOUBLE** pump

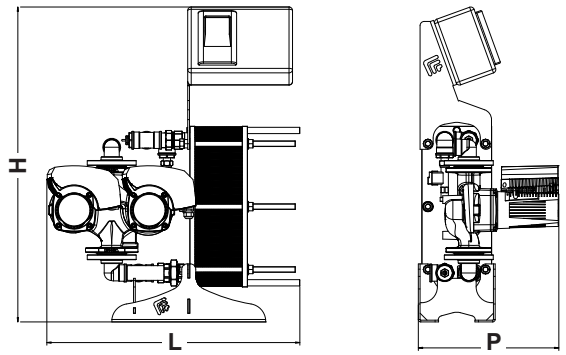

with **SINGLE** pump

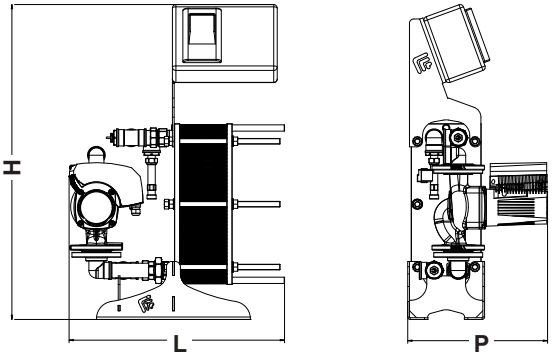

PRS – FOR HIGH TEMPERATURE SYSTEMS

with **DOUBLE** pump

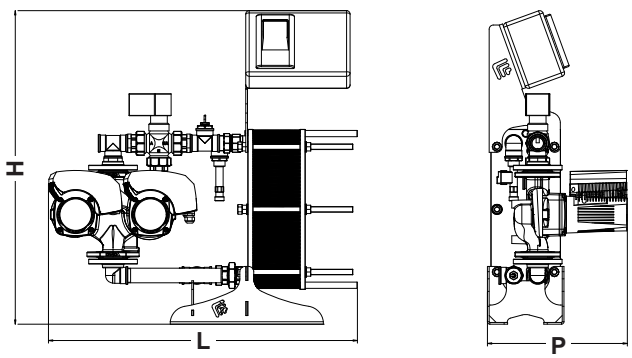

with **SINGLE** pump

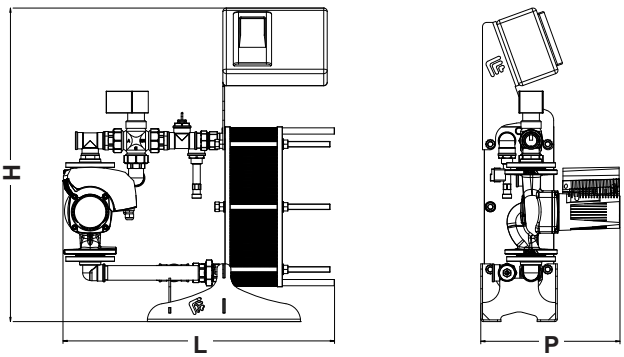



IDENTIFY THE BEST SOLUTION IN 5 EASY STEPS.

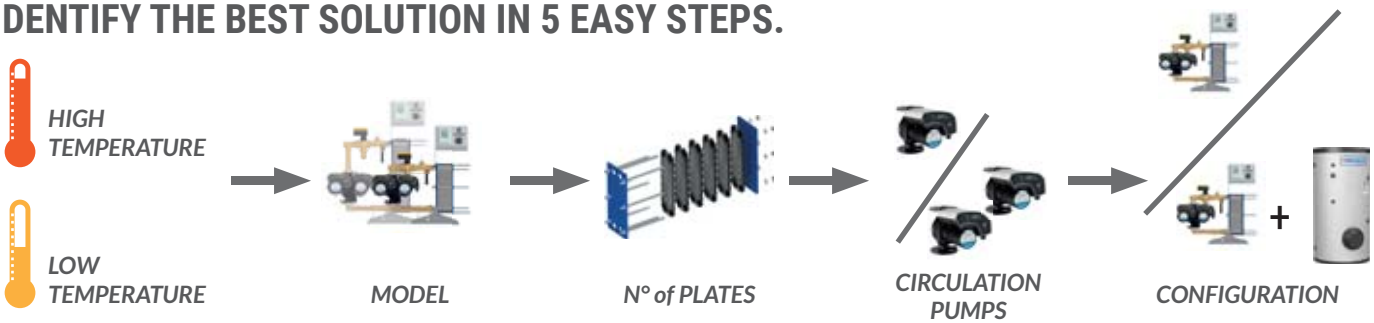

1. Identify the system according to the temperature of the primary circuit **(POINT 1)**

2. Identify the most suitable model through the selection chart. **(POINT 2)**

3. Identify through the charts the number of plates needed. **(POINT 3)**

4. Choose how many circulation pumps you want on your module. **(POINT 4)**

5. Choose among the configuration "with accumulation" or "without accumulation" . **(POINT 5)**

1) IDENTIFICATION OF THE SYSTEM

The PRS module is available in two basic versions: one for high temperature and one for low temperature. The models for high temperature feature a 3-way mixing valve on the primary circuit, in order to avoid deposits of limescale inside the exchanger. If the temperature of the primary circuit overcomes 60-65 °C it is necessary to choose the version for high temperature, while below this value it is possible to use also the models for low temperature.

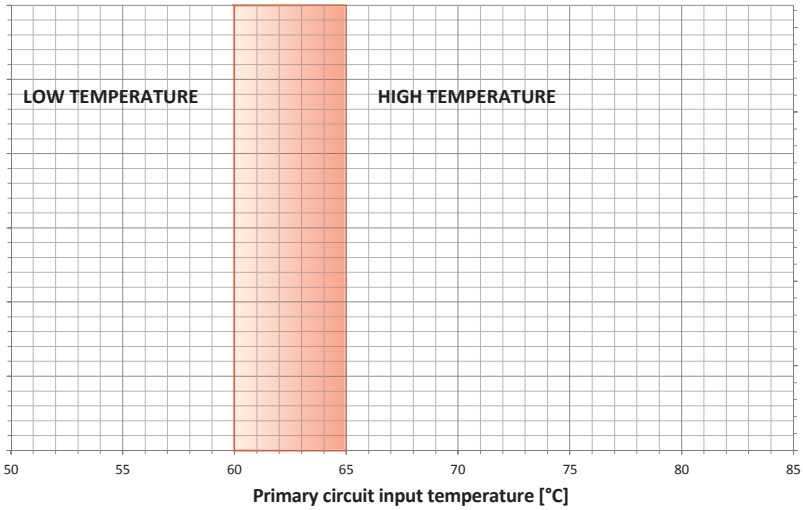

2) IDENTIFICATION OF THE MODEL

The PRS module is available in three different sizes, depending on the size of the heat exchanger: 4620, 7420 and 8031. In high temperature systems it is preferable to use the model 4620, in the low temperature systems it is preferable to use the model 7420, while the model 8031 is recommended for high demands of DHW.

PLEASE NOTE: each exchanger is characterized by a minimum DHW flow rate value, below this limit the PRS module might not function properly. Hence it is important to consider the values provided below for the choice of the module and for the system sizing, especially for the applications in which there is immediate production of DHW.

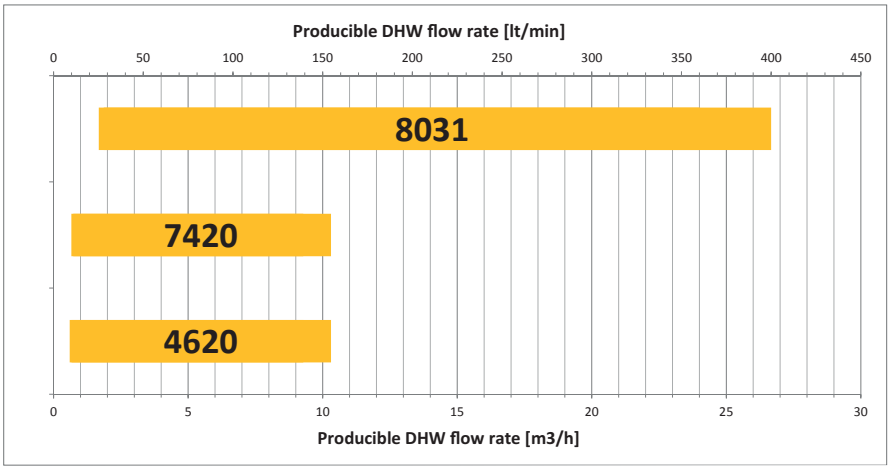

MINIMUM FLOW RATE OF PRODUCIBLE DHW

PRS 4620 => DHW minimum flow rate = 0,60 m³/h (10 lt/min)
PRS 7420 => DHW minimum flow rate = 0,66 m³/h (11 lt/min)
PRS 8031 => DHW minimum flow rate = 1,68 m³/h (28 lt/min)



3) CHOICE OF THE NUMBER OF PLATES

Once the model has been established, the choice of the number of plates can be made by using the selection charts presented in the following pages.
Please read below to understand how to read the charts.
THE FOLLOWING PARAMETERS NEED TO BE CONSIDERED:

- **The temperature difference between input and output of DHW (ΔTDHW):** the domestic water is taken from public drinking water system generally at 10°C; then it is heated up to the desired temperature set in the control unit of the PRS module.
- **The input temperature from the primary circuit to the exchanger (Tprim_IN):** in the case of PRS modules with 3-way valve the Tprim_IN corresponds to the mixing temperature of the primary fluid set in the control unit of the PRS module.
- **The DHW flow rate required to meet peaks in demand (Q'DHW)**

EXAMPLE:

In a high temperature system, supposing that the needed flow rate is 3 m³/h (50 lt/min) of DHW at 48°C, we have identified the model PRS 4620.
We consider the main inlet temperature to be 10 °C and the primary at 75 °C.
As first step we have to identify the selection graph with our ΔTDHW (10 ÷ 48 °C in this case).
Next we will trace a vertical line in correspondence of the input temperature of the primary circuit (75 °C) and an horizontal line in correspondence of the required DHW flow rate (3 m³/h).
The intersection of the two lines will represent the operational point of the PRS module in our peaks in demand. The number of plates required to guarantee the needs will be represented by the curve immediately above the point of intersection (in the specific case of the example this will be PRS 4620 with 33 plates).

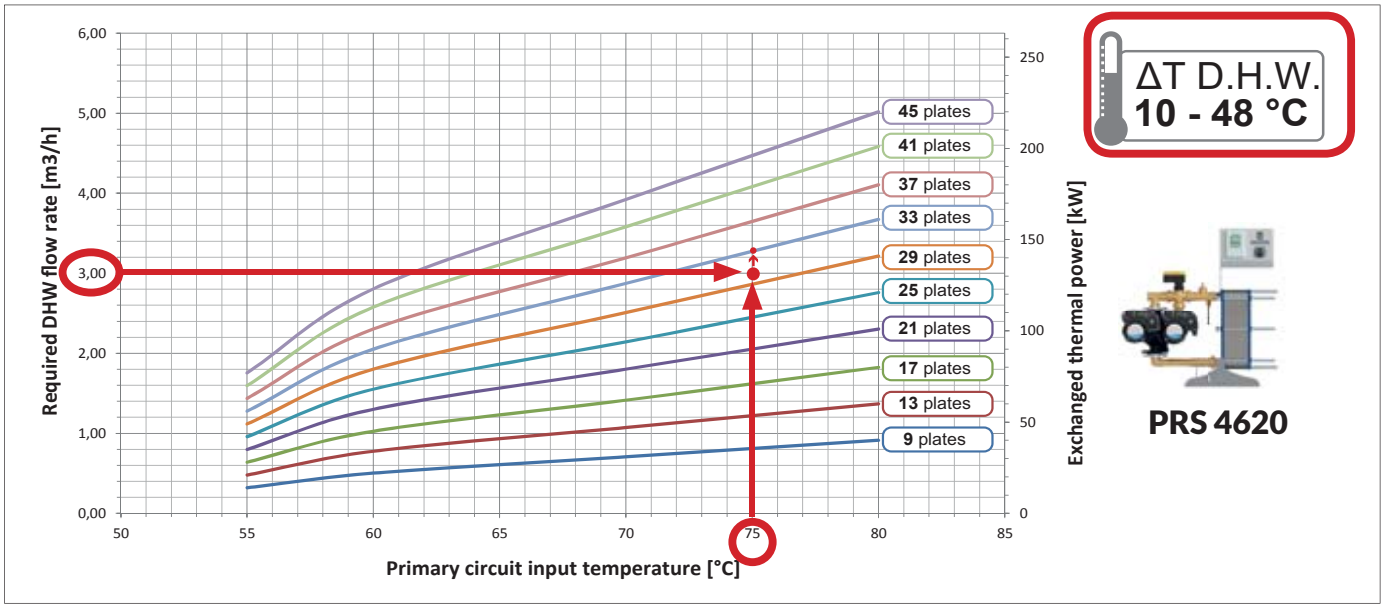

4) CHOICE OF THE NUMBER OF CIRCULATION PUMPS

Each PRS module is available either with single or with double pump on the primary circuit. The double pump allows a greater redundancy of the system, thanks to the backup alternating operation, hence a major assurance of continuity of water supply.

5) CHOICE OF CONFIGURATION ON USER SIDE (WITH OR WITHOUT DHW ACCUMULATION)

The systems with DHW accumulation allow to produce domestic hot water at a stable temperature. Moreover, at the same operational conditions, it is possible to choose smaller PRS modules since the accumulation tank works as a buffer that can satisfy the peaks in demand. For the models which foresee the accumulation, the central unit is specifically conceived to handle the inertial tank for DHW.

PLEASE NOTE: In case of configuration for accumulation, consult our calorifiers catalogue to complete the installation, by purchasing the accumulation tank which bests suits the needs of users.



PRS 4620

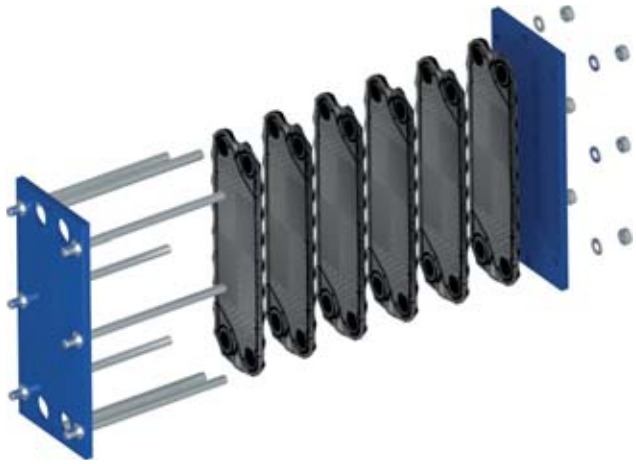

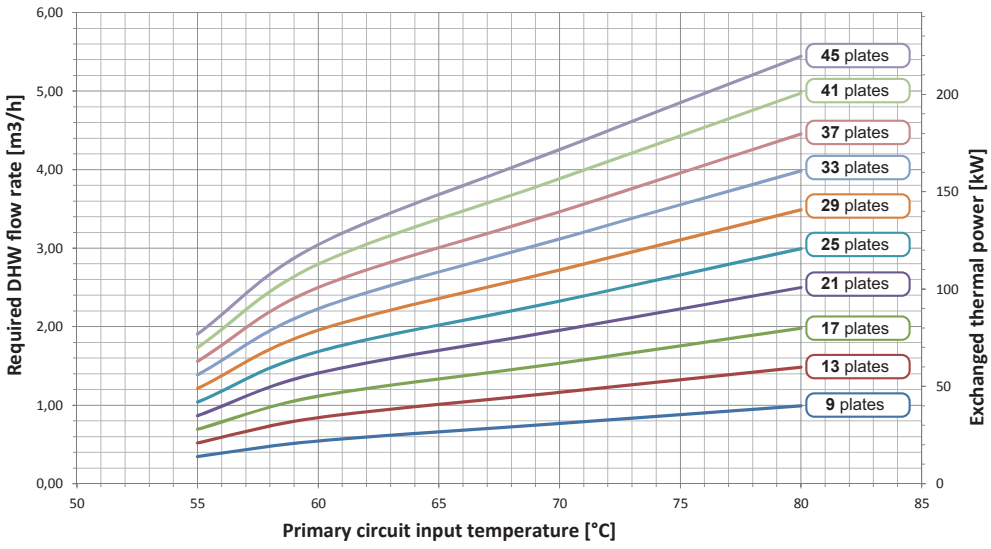
Required DHW flow rate [m3/h]
6,00
5,00
4,00
3,00
2,00
1,00
0,00
50
55
60
65
70
75
80
85
Primary circuit input temperature [°C]
Exchanged thermal power [kW]
200
150
100
50
0
45 plates
41 plates
37 plates
33 plates
29 plates
25 plates
21 plates
17 plates
13 plates
9 plates
ΔT D.H.W.
10 - 45 °C

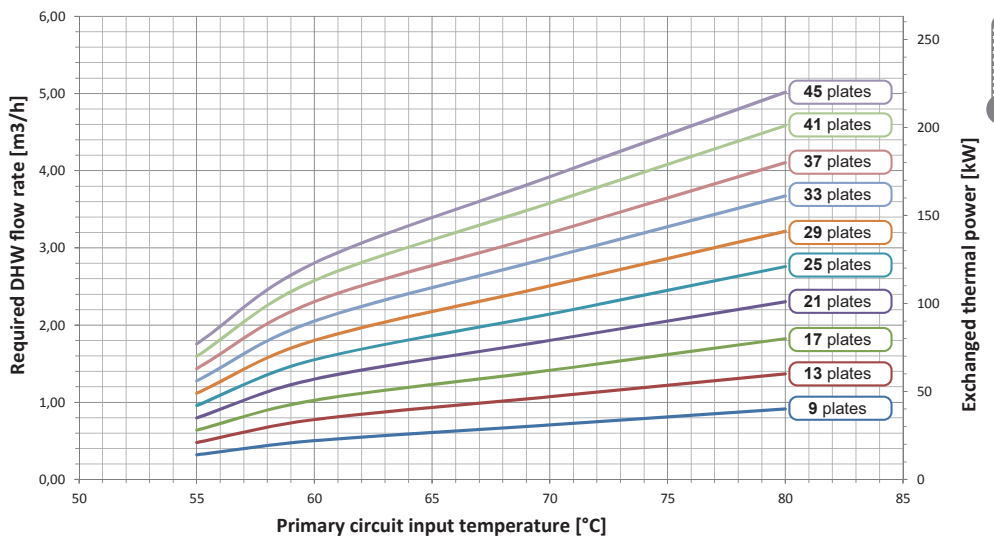
Required DHW flow rate [m3/h]
6,00
5,00
4,00
3,00
2,00
1,00
0,00
50
55
60
65
70
75
80
85
Primary circuit input temperature [°C]
Exchanged thermal power [kW]
250
200
150
100
50
0
45 plates
41 plates
37 plates
33 plates
29 plates
25 plates
21 plates
17 plates
13 plates
9 plates
ΔT D.H.W.
10 - 48 °C



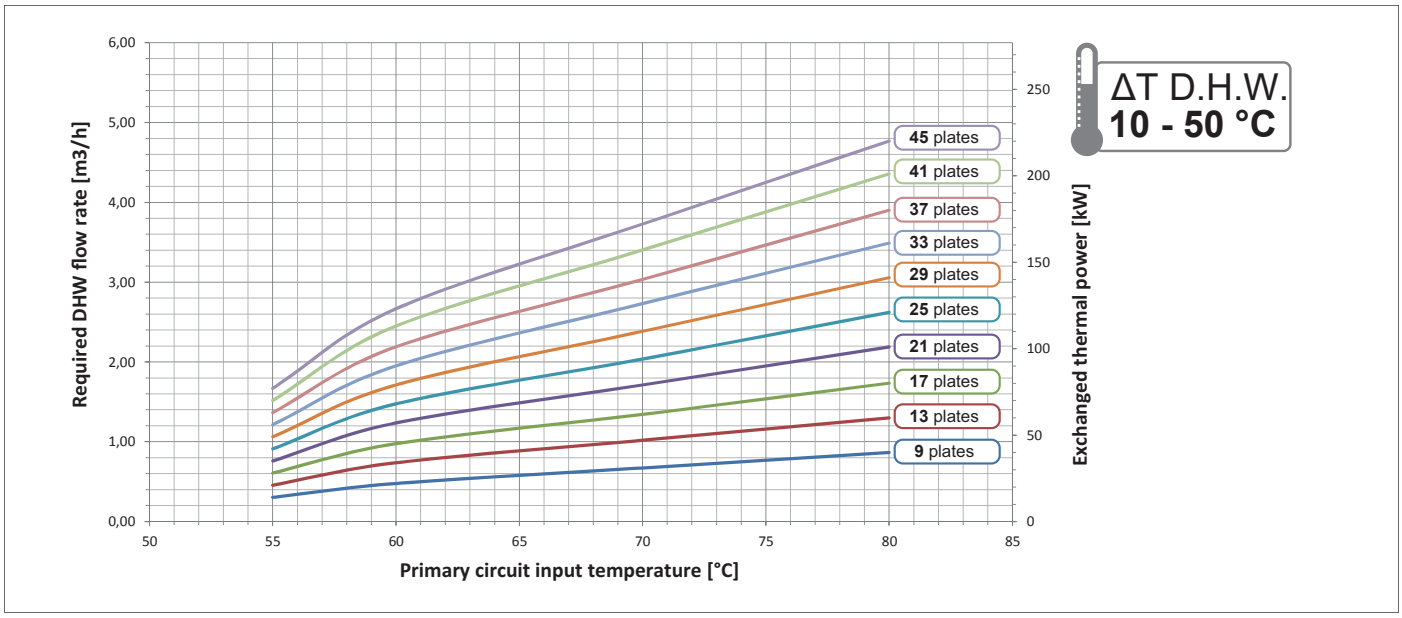
ΔT D.H.W.
10 - 50 °C
Required DHW flow rate [m3/h]
Exchanged thermal power [kW]
Primary circuit input temperature [°C]
45 plates
41 plates
37 plates
33 plates
29 plates
25 plates
21 plates
17 plates
13 plates
9 plates

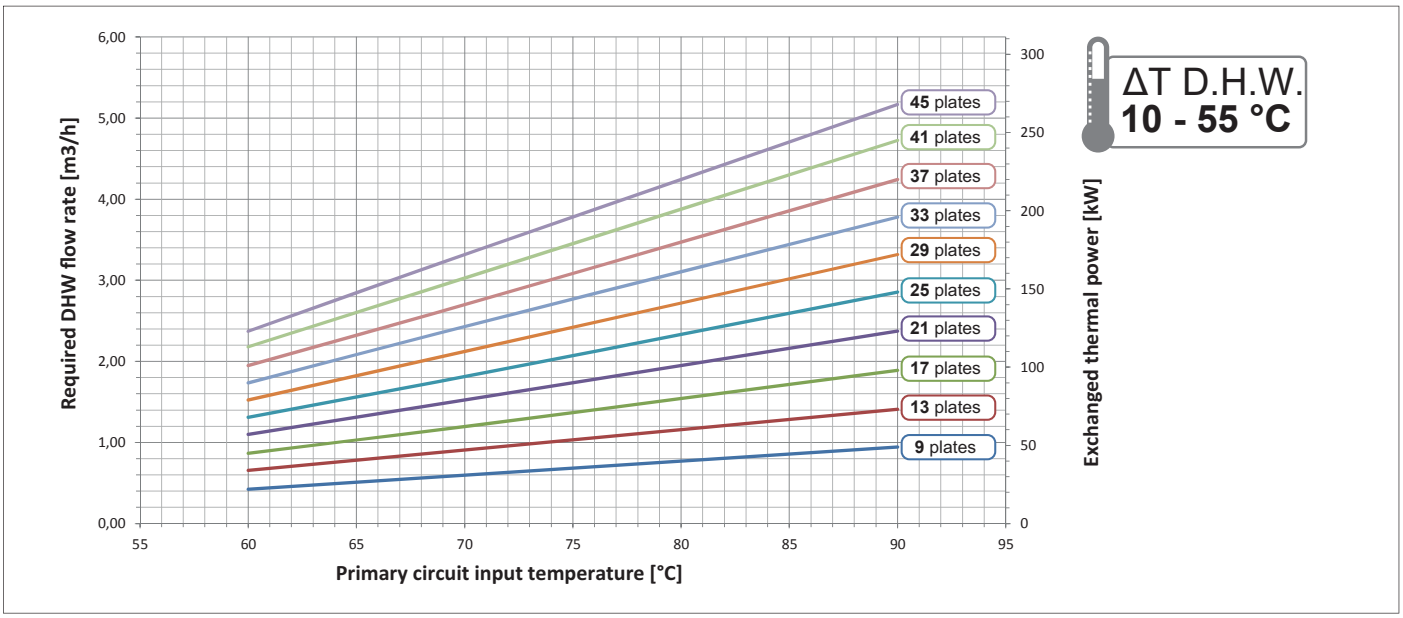
ΔT D.H.W.
10 - 55 °C
Required DHW flow rate [m3/h]
Exchanged thermal power [kW]
Primary circuit input temperature [°C]
45 plates
41 plates
37 plates
33 plates
29 plates
25 plates
21 plates
17 plates
13 plates
9 plates

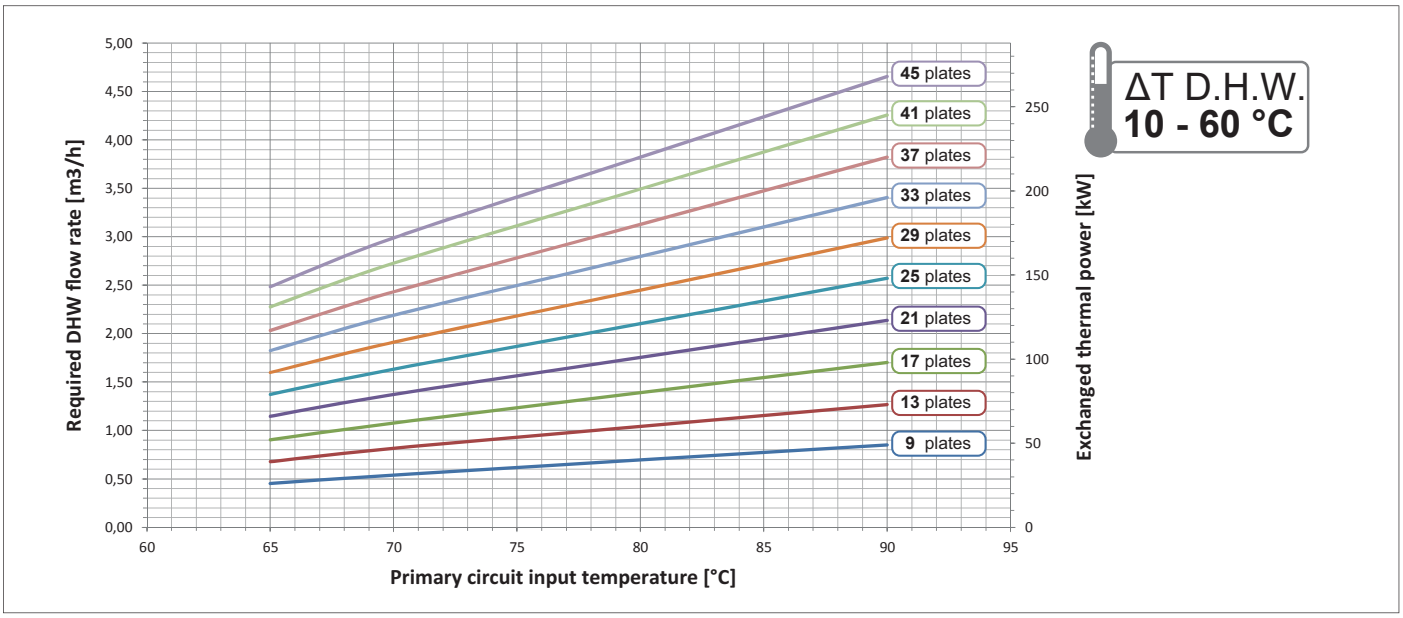
ΔT D.H.W.
10 - 60 °C
Required DHW flow rate [m3/h]
Exchanged thermal power [kW]
Primary circuit input temperature [°C]
45 plates
41 plates
37 plates
33 plates
29 plates
25 plates
21 plates
17 plates
13 plates
9 plates



PRS 7420

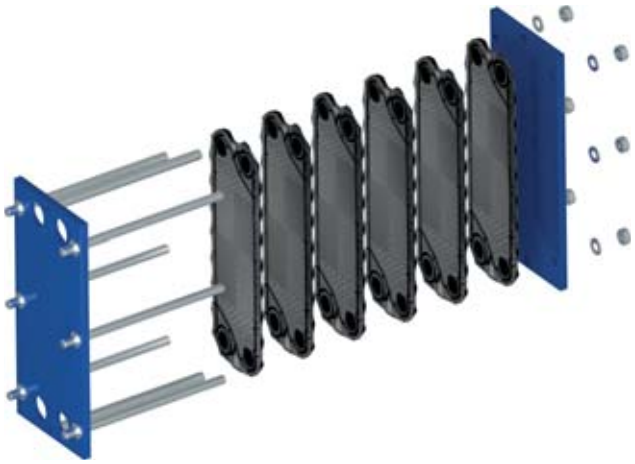

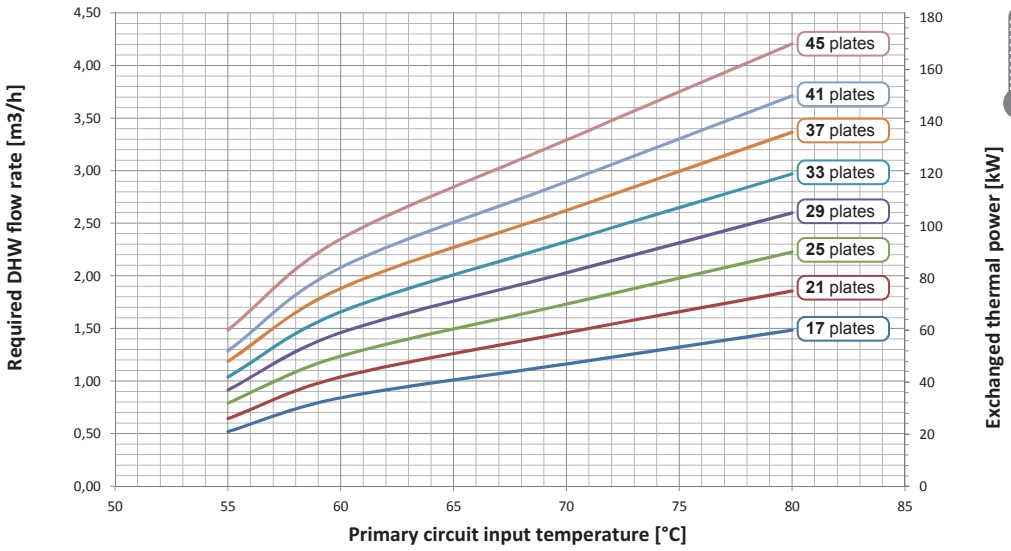
Required DHW flow rate [m3/h]
4,50
4,00
3,50
3,00
2,50
2,00
1,50
1,00
0,50
0,00
50
55
60
65
70
75
80
85
Primary circuit input temperature [°C]
180
160
140
120
100
80
60
40
20
0
Exchanged thermal power [kW]
45 plates
41 plates
37 plates
33 plates
29 plates
25 plates
21 plates
17 plates
ΔT D.H.W.
10 - 45 °C

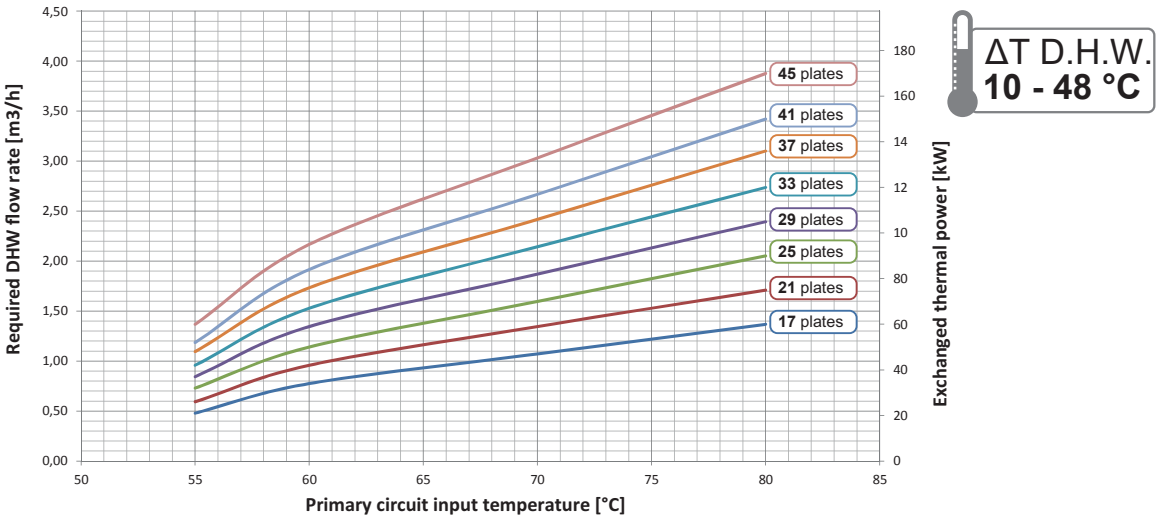
Required DHW flow rate [m3/h]
4,50
4,00
3,50
3,00
2,50
2,00
1,50
1,00
0,50
0,00
50
55
60
65
70
75
80
85
Primary circuit input temperature [°C]
180
160
14
12
10
80
60
40
20
0
Exchanged thermal power [kW]
45 plates
41 plates
37 plates
33 plates
29 plates
25 plates
21 plates
17 plates
ΔT D.H.W.
10 - 48 °C



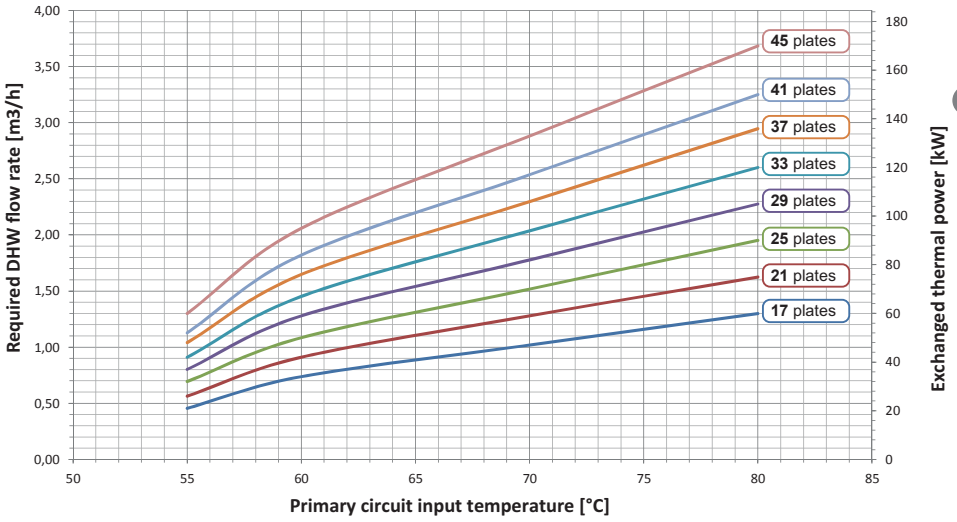

ΔT D.H.W.
10 - 50 °C

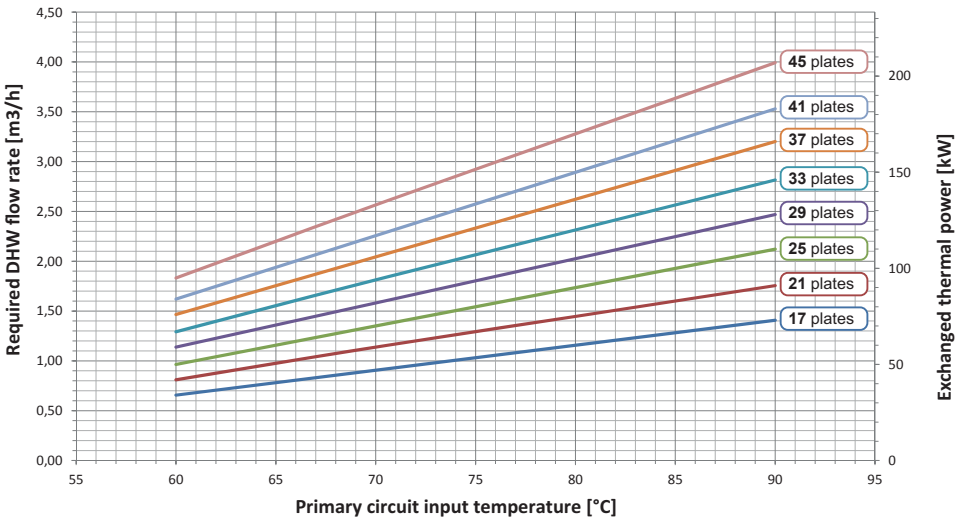

ΔT D.H.W.
10 - 55 °C

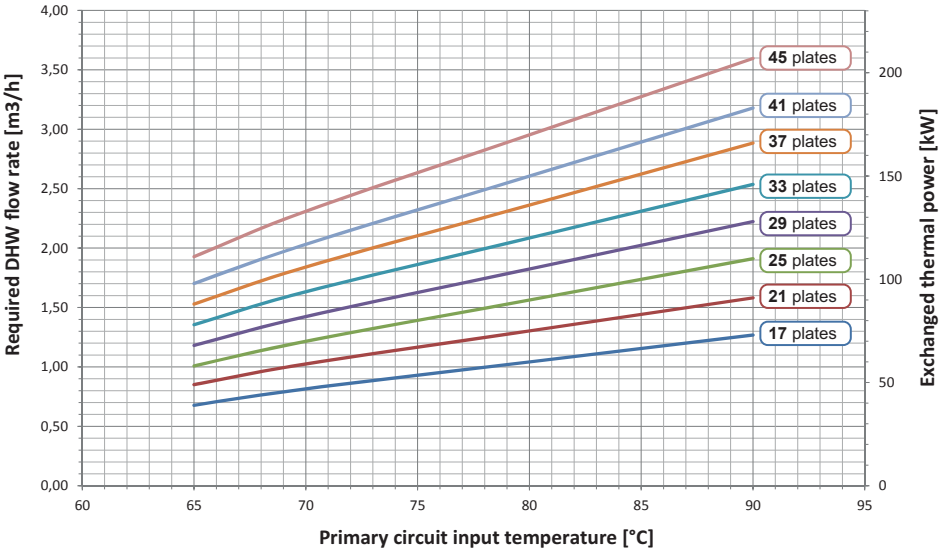

ΔT D.H.W.
10 - 60 °C



PRS 8031

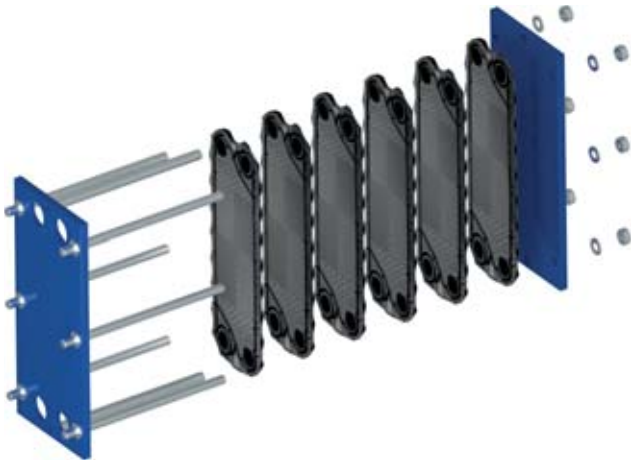

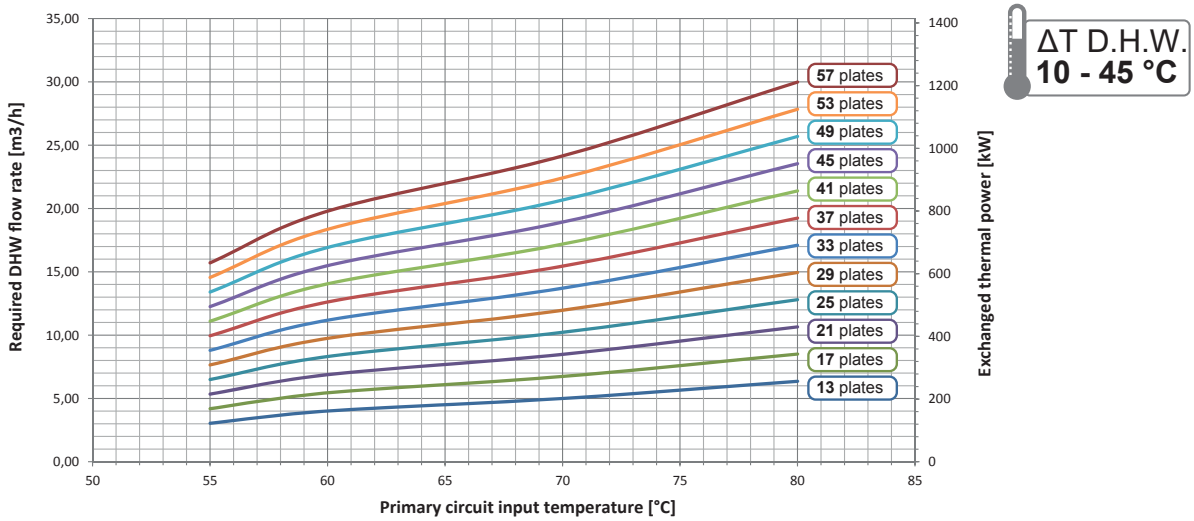
Required DHW flow rate [m3/h]
35,00
30,00
25,00
20,00
15,00
10,00
5,00
0,00
50
55
60
65
70
75
80
85
Primary circuit input temperature [°C]
Exchanged thermal power [kW]
1400
1200
1000
800
600
400
200
0
57 plates
53 plates
49 plates
45 plates
41 plates
37 plates
33 plates
29 plates
25 plates
21 plates
17 plates
13 plates
ΔT D.H.W.
10 - 45 °C

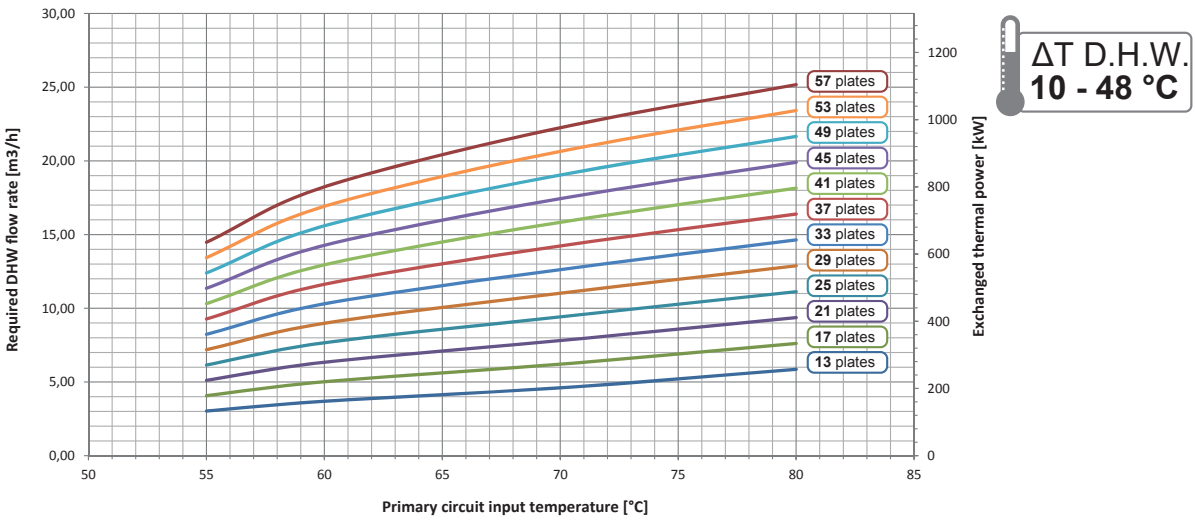
Required DHW flow rate [m3/h]
30,00
25,00
20,00
15,00
10,00
5,00
0,00
50
55
60
65
70
75
80
85
Primary circuit input temperature [°C]
Exchanged thermal power [kW]
1200
1000
800
600
400
200
0
57 plates
53 plates
49 plates
45 plates
41 plates
37 plates
33 plates
29 plates
25 plates
21 plates
17 plates
13 plates
ΔT D.H.W.
10 - 48 °C



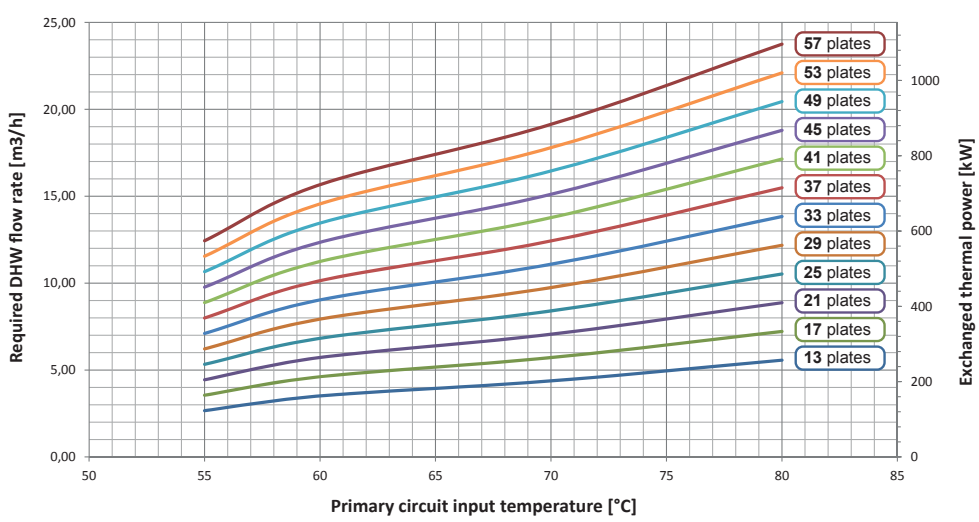
ΔT D.H.W.
10 - 50 °C
Required DHW flow rate [m3/h]
Exchanged thermal power [kW]
Primary circuit input temperature [°C]
57 plates
53 plates
49 plates
45 plates
41 plates
37 plates
33 plates
29 plates
25 plates
21 plates
17 plates
13 plates

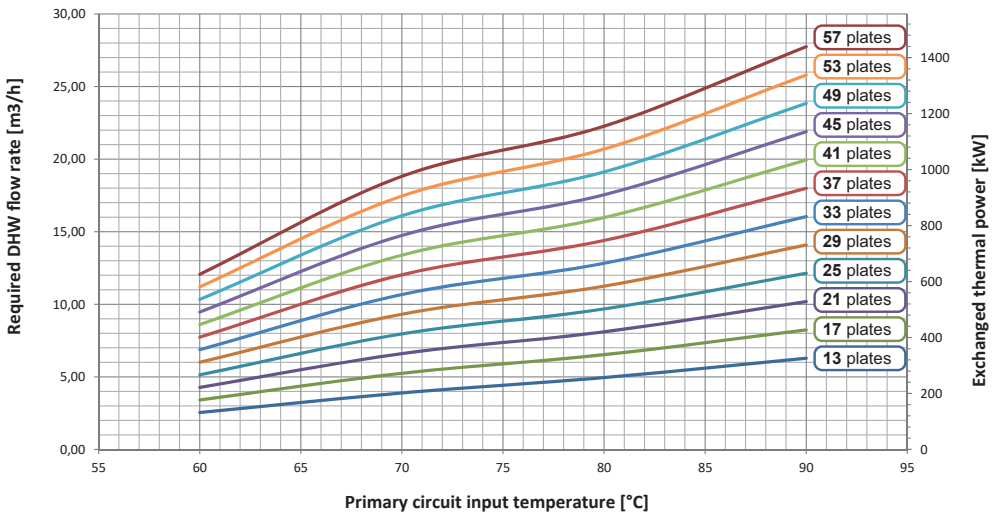
ΔT D.H.W.
10 - 55 °C
Required DHW flow rate [m3/h]
Exchanged thermal power [kW]
Primary circuit input temperature [°C]
57 plates
53 plates
49 plates
45 plates
41 plates
37 plates
33 plates
29 plates
25 plates
21 plates
17 plates
13 plates

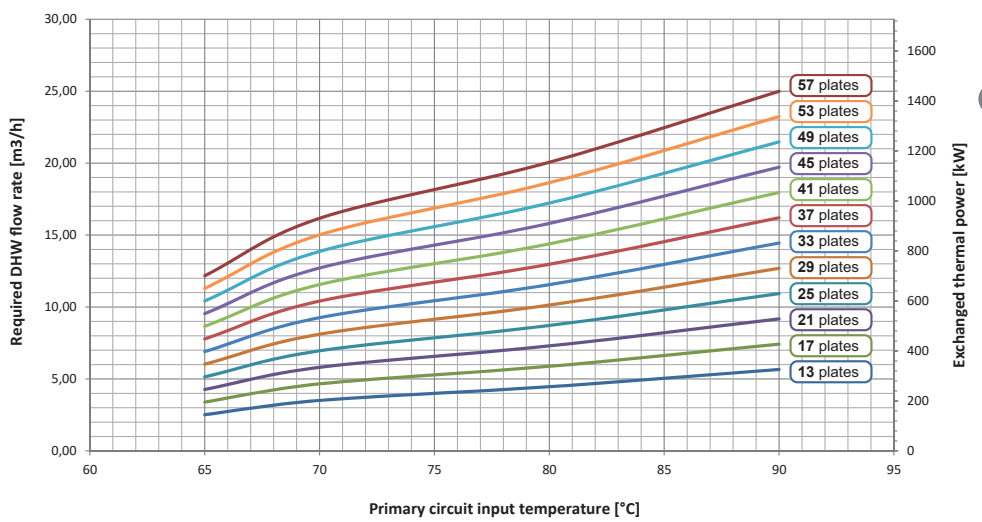
ΔT D.H.W.
10 - 60 °C
Required DHW flow rate [m3/h]
Exchanged thermal power [kW]
Primary circuit input temperature [°C]
57 plates
53 plates
49 plates
45 plates
41 plates
37 plates
33 plates
29 plates
25 plates
21 plates
17 plates
13 plates



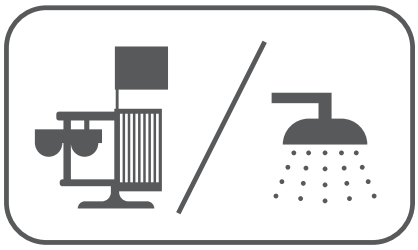

CONFIGURATION WITHOUT DHW ACCUMULATION

LOW TEMPERATURE

SINGLE PUMP

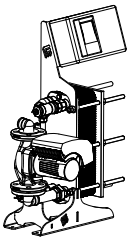

Model	plates nr°	Art. Nr.
PHC 4620	**9**	3435316701090
	13	3435316701091
	17	3435316701092
	21	3435316701093
	25	3435316701094
	29	3435316701095
	33	3435316701096
	37	3435316701097
	41	3435316701098
	45	3435316701099
PHC 7420	**17**	3435316701170
	21	3435316701171
	25	3435316701172
	29	3435316701173
	33	3435316701174
	37	3435316701175
	41	3435316701176
	45	3435316701177
PHC 8031	**13**	3435316701234
	17	3435316701235
	21	3435316701236
	25	3435316701237
	29	3435316701238
	33	3435316701239
	37	3435316701240
	41	3435316701241
	45	3435316701242
	49	3435316701243
	53	3435316701244
	57	3435316701245

DOUBLE PUMP

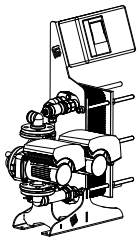

Model	plates nr°	Art. Nr.
PHC 4620	**9**	3435316701100
	13	3435316701101
	17	3435316701102
	21	3435316701103
	25	3435316701104
	29	3435316701105
	33	3435316701106
	37	3435316701107
	41	3435316701108
	45	3435316701109
PHC 7420	**17**	3435316701178
	21	3435316701179
	25	3435316701180
	29	3435316701181
	33	3435316701182
	37	3435316701183
	41	3435316701184
	45	3435316701185
PHC 8031	**13**	3435316701246
	17	3435316701247
	21	3435316701248
	25	3435316701249
	29	3435316701250
	33	3435316701251
	37	3435316701252
	41	3435316701253
	45	3435316701254
	49	3435316701255
	53	3435316701256
	57	3435316701257



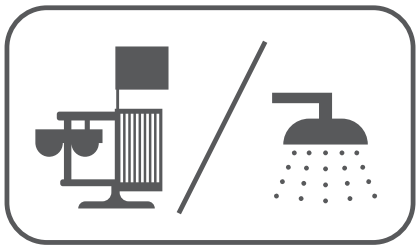

CONFIGURATION WITHOUT DHW ACCUMULATION

HIGH TEMPERATURE

SINGLE PUMP

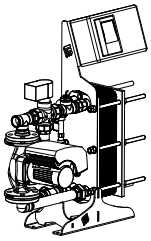

Model	plates nr°	Art. Nr.
PHC 4620	**9**	3435316701130
	13	3435316701131
	17	3435316701132
	21	3435316701133
	25	3435316701134
	29	3435316701135
	33	3435316701136
	37	3435316701137
	41	3435316701138
	45	3435316701139
PHC 7420	**17**	3435316701202
	21	3435316701203
	25	3435316701204
	29	3435316701205
	33	3435316701206
	37	3435316701207
	41	3435316701208
	45	3435316701209
PHC 8031	**13**	3435316701282
	17	3435316701283
	21	3435316701284
	25	3435316701285
	29	3435316701286
	33	3435316701287
	37	3435316701288
	41	3435316701289
	45	3435316701290
	49	3435316701291
	53	3435316701292
	57	3435316701293

DOUBLE PUMP

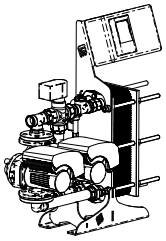

Model	plates nr°	Art. Nr.
PHC 4620	**9**	3435316701140
	13	3435316701141
	17	3435316701142
	21	3435316701143
	25	3435316701144
	29	3435316701145
	33	3435316701146
	37	3435316701147
	41	3435316701148
	45	3435316701149
PHC 7420	**17**	3435316701210
	21	3435316701211
	25	3435316701212
	29	3435316701213
	33	3435316701214
	37	3435316701215
	41	3435316701216
	45	3435316701217
PHC 8031	**13**	3435316701294
	17	3435316701295
	21	3435316701296
	25	3435316701297
	29	3435316701298
	33	3435316701299
	37	3435316701300
	41	3435316701301
	45	3435316701302
	49	3435316701303
	53	3435316701304
	57	3435316701305

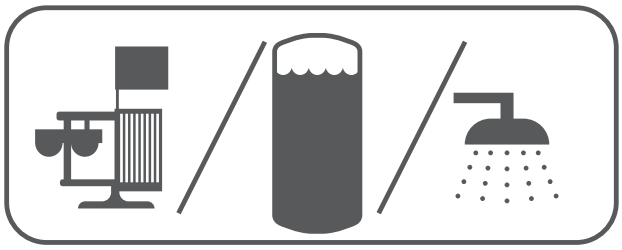

CONFIGURATION FOR DHW ACCUMULATION

LOW TEMPERATURE

SINGLE PUMP

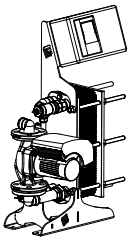

Model	plates nr°	Art. Nr.
PHC 4620	**9**	3435316701110
	13	3435316701111
	17	3435316701112
	21	3435316701113
	25	3435316701114
	29	3435316701115
	33	3435316701116
	37	3435316701117
	41	3435316701118
	45	3435316701119
PHC 7420	**17**	3435316701186
	21	3435316701187
	25	3435316701188
	29	3435316701189
	33	3435316701190
	37	3435316701191
	41	3435316701192
	45	3435316701193
PHC 8031	**13**	3435316701258
	17	3435316701259
	21	3435316701260
	25	3435316701261
	29	3435316701262
	33	3435316701263
	37	3435316701264
	41	3435316701265
	45	3435316701266
	49	3435316701267
	53	3435316701268
	57	3435316701269

DOUBLE PUMP

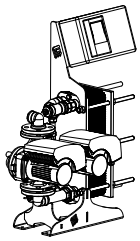

Model	plates nr°	Art. Nr.
PHC 4620	**9**	3435316701120
	13	3435316701121
	17	3435316701122
	21	3435316701123
	25	3435316701124
	29	3435316701125
	33	3435316701126
	37	3435316701127
	41	3435316701128
	45	3435316701129
PHC 7420	**17**	3435316701194
	21	3435316701195
	25	3435316701196
	29	3435316701197
	33	3435316701198
	37	3435316701199
	41	3435316701200
	45	3435316701201
PHC 8031	**13**	3435316701270
	17	3435316701271
	21	3435316701272
	25	3435316701273
	29	3435316701274
	33	3435316701275
	37	3435316701276
	41	3435316701277
	45	3435316701278
	49	3435316701279
	53	3435316701280
	57	3435316701281



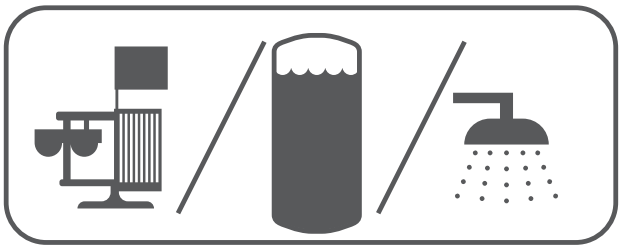

CONFIGURATION FOR DHW ACCUMULATION

HIGH TEMPERATURE

SINGLE PUMP

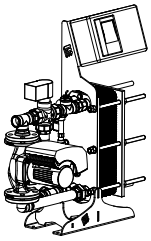

Model	plates nr°	Art. Nr.
PHC 4620	**9**	3435316701150
	13	3435316701151
	17	3435316701152
	21	3435316701153
	25	3435316701154
	29	3435316701155
	33	3435316701156
	37	3435316701157
	41	3435316701158
	45	3435316701159
PHC 7420	**17**	3435316701218
	21	3435316701219
	25	3435316701220
	29	3435316701221
	33	3435316701222
	37	3435316701223
	41	3435316701224
	45	3435316701225
PHC 8031	**13**	3435316701306
	17	3435316701307
	21	3435316701308
	25	3435316701309
	29	3435316701310
	33	3435316701311
	37	3435316701312
	41	3435316701313
	45	3435316701314
	49	3435316701315
	53	3435316701316
	57	3435316701317

DOUBLE PUMP

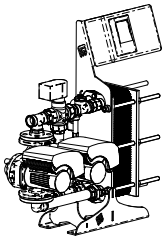

Model	plates nr°	Art. Nr.
PHC 4620	**9**	3435316701160
	13	3435316701161
	17	3435316701162
	21	3435316701163
	25	3435316701164
	29	3435316701165
	33	3435316701166
	37	3435316701167
	41	3435316701168
	45	3435316701169
PHC 7420	**17**	3435316701226
	21	3435316701227
	25	3435316701228
	29	3435316701229
	33	3435316701230
	37	3435316701231
	41	3435316701232
	45	3435316701233
PHC 8031	**13**	3435316701318
	17	3435316701319
	21	3435316701320
	25	3435316701321
	29	3435316701322
	33	3435316701323
	37	3435316701324
	41	3435316701325
	45	3435316701326
	49	3435316701327
	53	3435316701328
	57	3435316701329

PRS MODULE



EXAMPLE OF INSTALLATION WITH **MODULO PRS** - FOR DHW ACCUMULATION

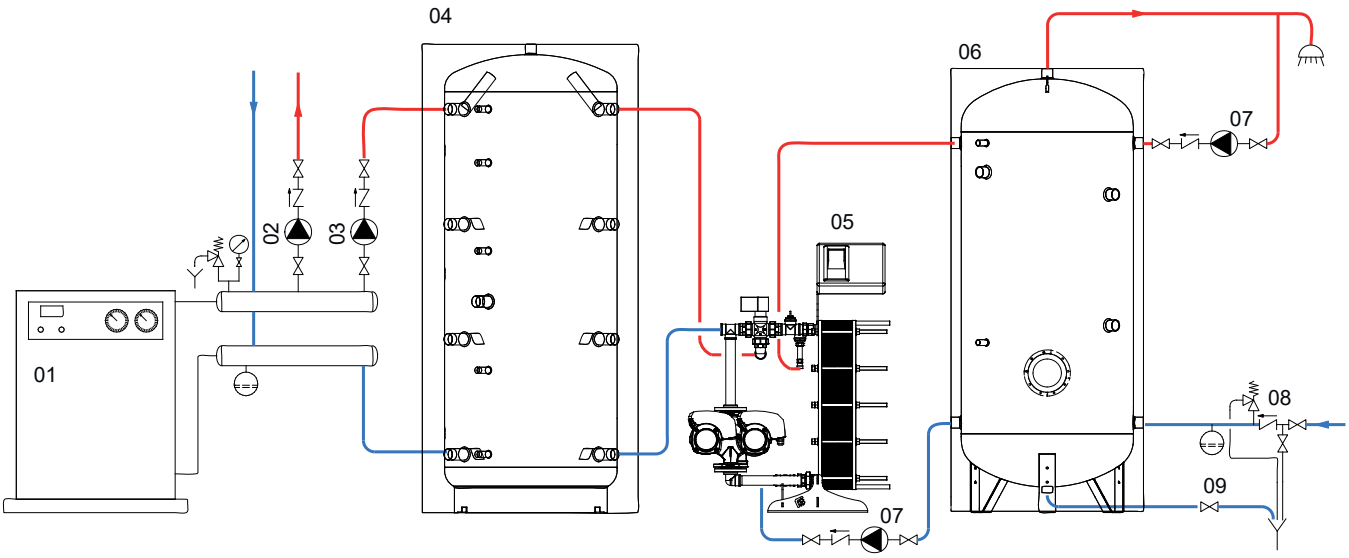

01	Generator	04	PUFFER (Inertial tank)	07	D.H.W. recirculation group
02	Heating system circulation group	05	PRS Module	08	Hydraulic safety group
03	Primary circulation group	06	VASO INERZIALE	09	Blowdown valve

EXAMPLE OF INSTALLATION WITH **MODULO PRS** - FOR DHW ACCUMULATION

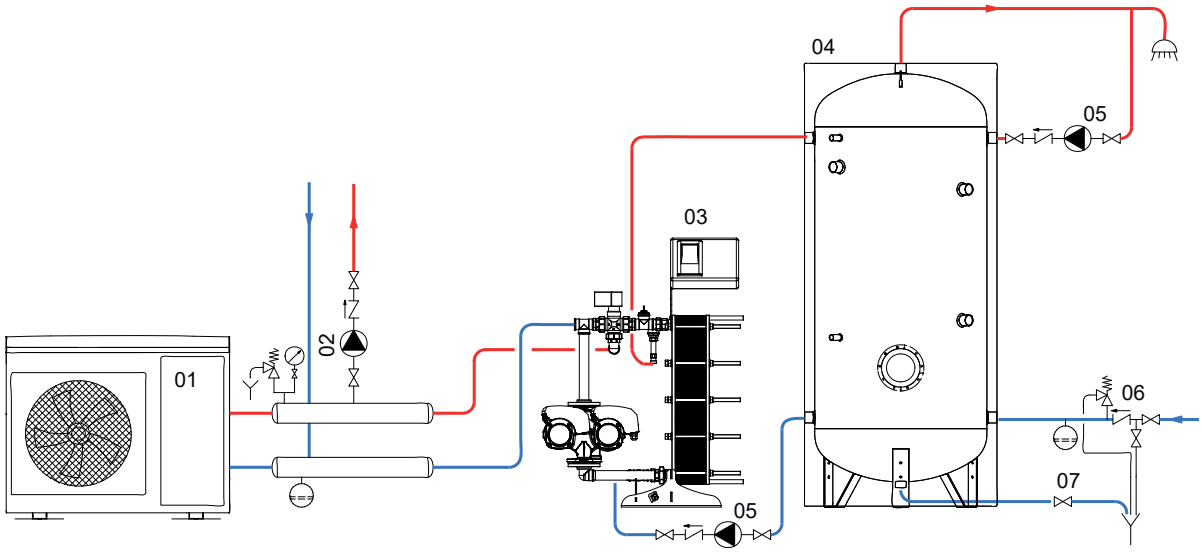

01	Generator	04	VASO INERZIALE	07	Blowdown valve
02	Heating system circulation group	05	D.H.W. recirculation group		
03	PRS Module	06	Hydraulic safety group		

The following schemes are purely illustrative. To realize the installation, always refer to a qualified design engineer.

PRS MODULE



EXAMPLE OF INSTALLATION WITH **MODULO PRS -** WITHOUT DHW ACCUMULATION

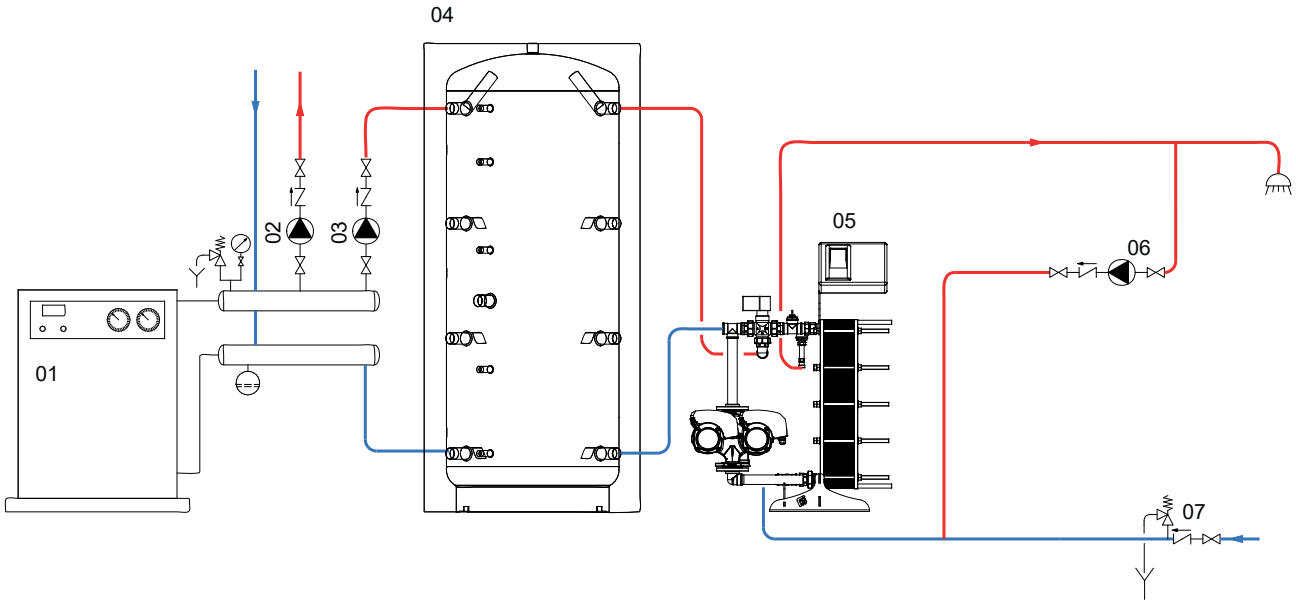

01	Generator	03	Primary circulation group	05	PRS Module	07	Hydraulic safety group
02	Heating system circulation group	04	PUFFER (Inertial tank)	06	D.H.W. recirculation group		

OPEN EXPANSION VESSEL

STAINLESS STEEL 304 / GALVANIZED / POLYETHILENE

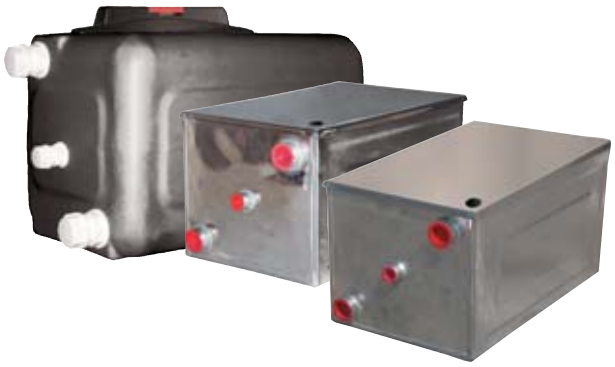

Open expansion tanks are used as safety accessories in the heating systems where, due to legal reason it is forbidden to install closed expansion tank systems. In Italy, for the water fireplaces, they are still one of the most simple and economic solutions. Expansion tank is composed by a cover unit where all the security piping of outlet pipe for too full , supplying and systems charge , should arrive. Its rule is to merge the water in excess caused by temperature increase. Expansion Tank should be placed on the highest point reached by the water and should have an expanding volume not less than the expansion volume developed by all the water contained in the system , whose value should be declared in the project.

Expansion volume needed in the system is calculated by the following formula:
"Ve = C x e"
Where C is the water contained in the system and "e" is equal to the difference between the expansion factor of the water at the minimum conceivable temperature with sleeping system and the expansion factor of the water at boiling temperature of atmospheric pressure. Considering the first water temperature equal to 10°C and the boiling one at 100°C
"e" = 0.0431
It is possible to connect more than one tank together.

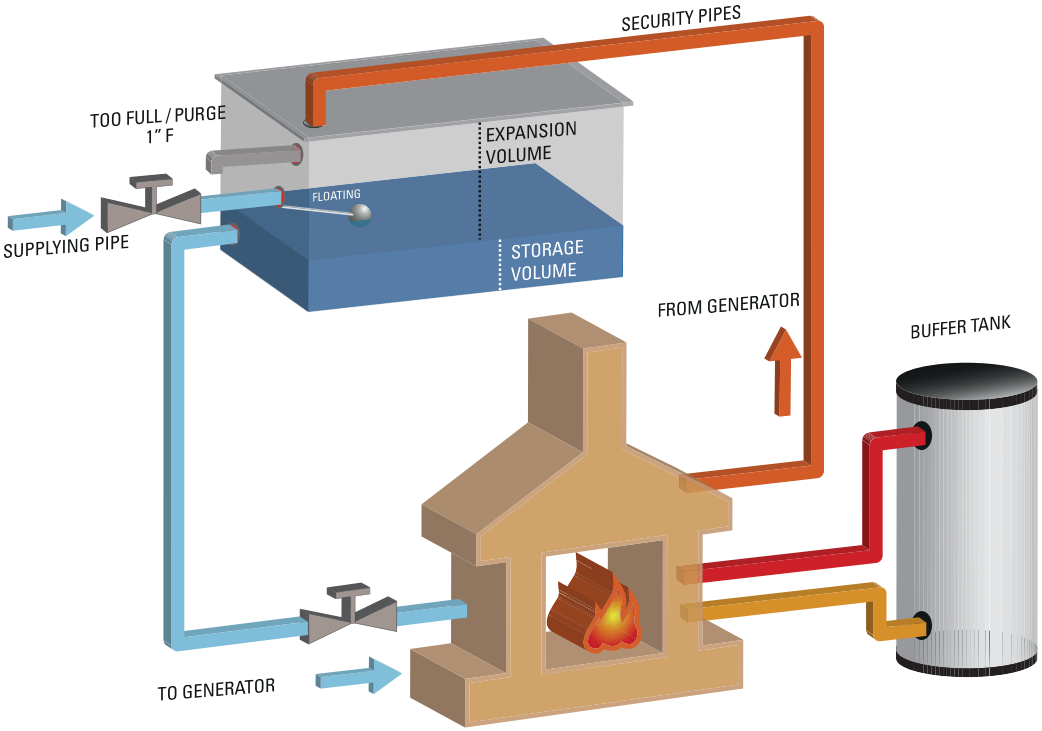

OPEN EXPANSION VESSEL
Stainless steel 304 / Galvanized / Polyethilene

STOCK AVAILABILITY



Stainless steel 304

EXPANSION VESSEL - STAINLESS STEEL 304

Model	Stainless steel AISI 304	Dimensions HxLxP	Expansion volume
	Art. Nr.	[mm]	[lt]
30	3941014010001	275x455x245	7,5
50	3941014010002	276x455x430	30



Galvanized

EXPANSION VESSEL Z - GALVANIZED

Model	Galvanized	Dimensions HxLxP	Expansion volume
	Art. Nr.	[mm]	[lt]
30	3941164010001	275x455x245	7,5
50	3941164010002	276x455x430	30



Polyethilene

POLYETHILENE EXPANSION VESSEL

Model	POLYETHILENE	Dimensions HxLxP	Expansion volume
	Art. Nr.	[mm]	[lt]
30	3500264011001	319x491x280	7,5

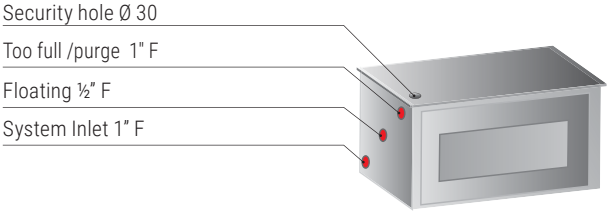



INERTIAL AND CHILLED WATER TANKS

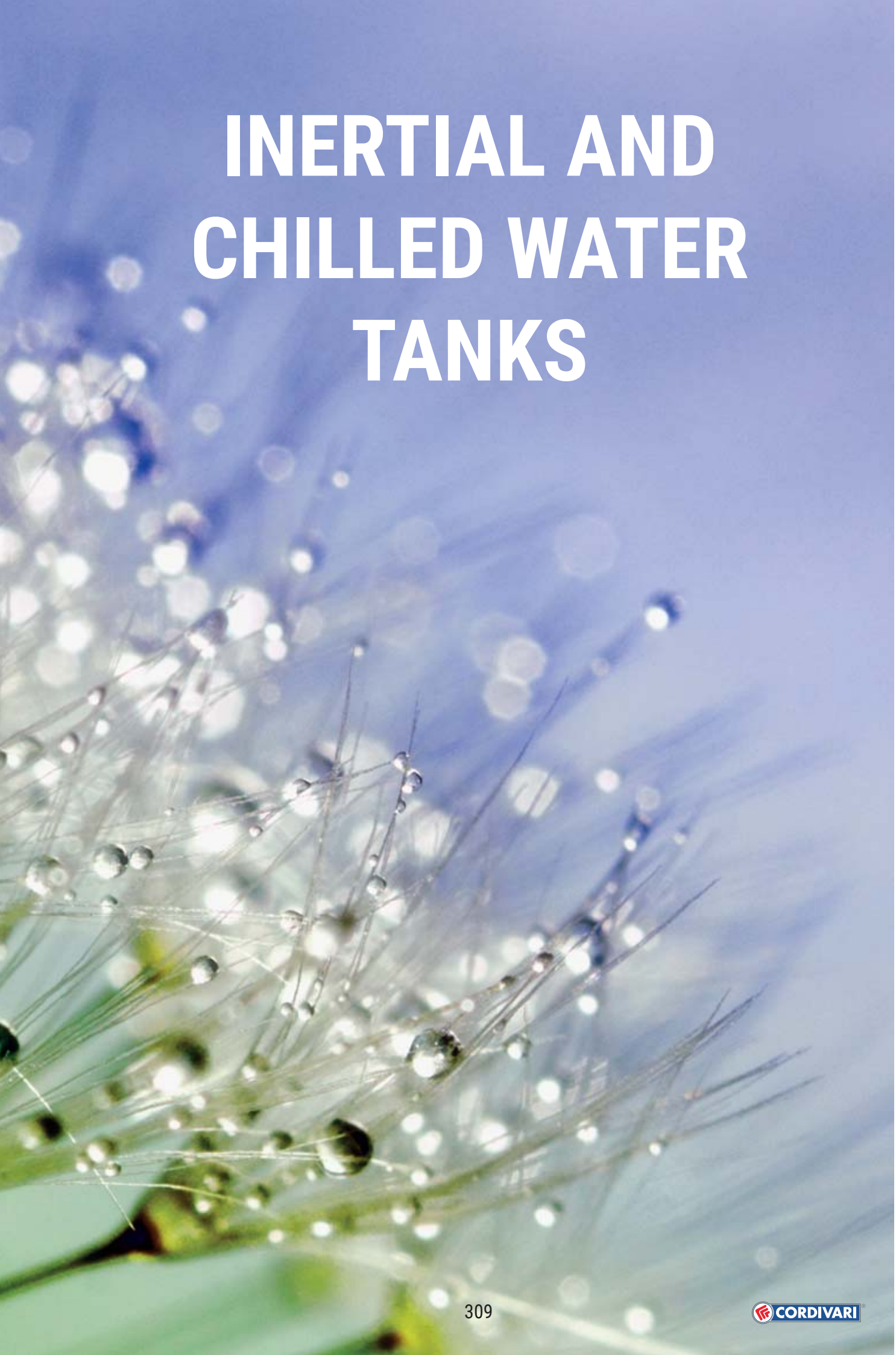

VOLANO TERMICO PDC PENSILE

HANGING BUFFER TANK FOR HEAT PUMP



PRESSURE	TEMPERATURE
Pmax	Tmax
4 bar	-10 / +95 °C

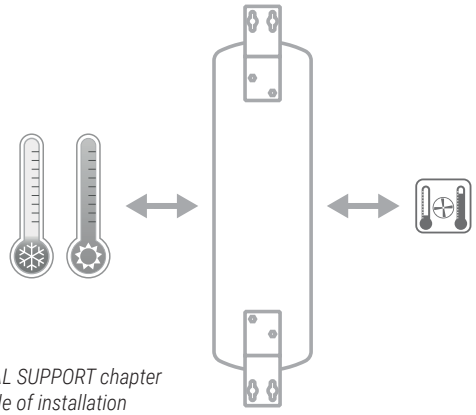

See TECHNICAL SUPPORT chapter for example of installation

TECHNICAL DESCRIPTION
Buffers either for hot or cold water have two main functions: they work both as hydraulic separator and buffer tank.
The hydraulic separator makes the heat pump flow rates and terminals flow rates unconnected. The buffer function reduces the heat pump on/off switchings.
Hanging energy buffer tanks are designed for wall installation.

MATERIAL
Mild steel.
EXTERNAL LINING
Grey PVC.
INSULATION
High thermal insulation with ecological polyurethane hard foam.
WARRANTY
2 years-See general sales conditions and warranty.

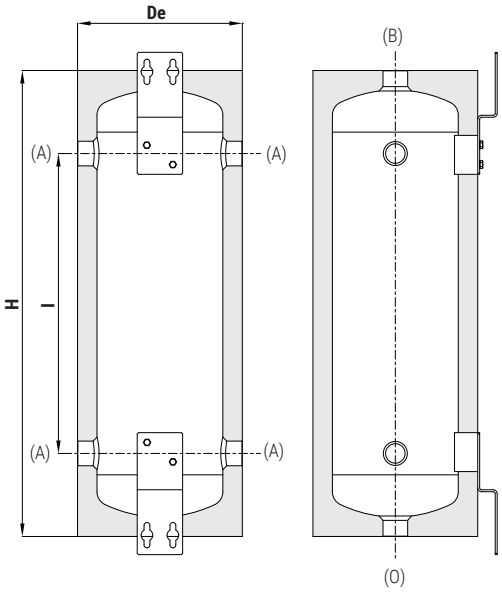

A	To the System
B	Safety Valve
O	Drain

STOCK AVAILABILITY

VOLANO TERMICO PDC (12 unit box)

ENERGY EFFICIENCY CLASS

Model	12 unit box Art. Nr.	ErP
8	307016092000612	B
12	307016092000412	B

VOLANO TERMICO PDC

ENERGY EFFICIENCY CLASS

Model	Art. Nr.	ErP
12	3070160920004	B
25	3070160920001	B
50	3070160920003	B
80	3070160920008	C
100	3070160920009	C

cordivari.com/erp

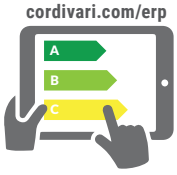

On line ErP label tool

CORDIVARI Lab

TÜV Rheinland Energie und Umwelt GmbH states that test procedures and Cordivari LAB are certified conforming to European standard EN 15332, as indicated by Ecodesign ErP Directive.

TESTED ErP

Model	Volume [lt]	Weight [Kg]	De	H	I	B-O	A
						Connections	F
8	8,3	6,5	260	382	126	1"	1"
12	12,4	7,5	254	526	270	1"	1"
25	25	11	290	790	520	1"	1"1/4
50	51	16	343	690	1008	1"	1"1/4
80	81	18	450	745	400	1"1/4	1"1/4
100	95	24	450	870	525	1"1/4	1"1/4

P.E.D. product designed and produced in conformity to the article 4.3 of directive 2014/68/UE - ErP Ecodesgin directive 2009/125/CE

VOLANO TERMICO **PDC**

BUFFER TANK FOR HEAT PUMP

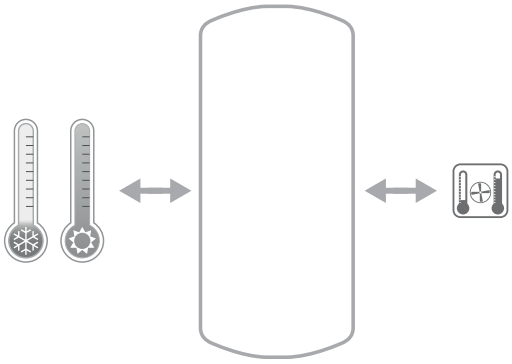

See TECHNICAL SUPPORT chapter for example of installation

PRESSURE	TEMPERATURE
Pmax	Tmax
4 bar	-10 / +95 °C



TECHNICAL DESCRIPTION
Buffer either for hot or cold water provided by heat pump, in order to limit the generator on/off switchings.
MATERIAL
Mild steel.
EXTERNAL LINING
Grey PVC.

INSULATION
High thermal insulation with ecological polyurethane hard foam.
WARRANTY
2 years-See general sales conditions and warranty.

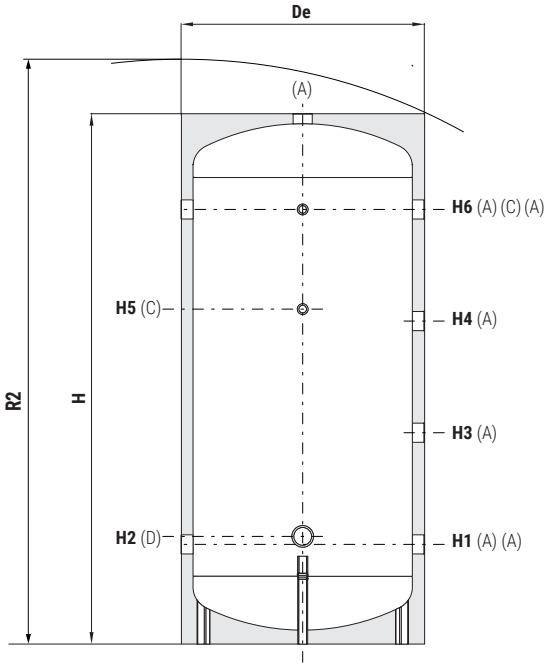

A	To the System
C	Connection for instrumentation 1/2" F
D	Connection for electric immersion heater 1" 1/2 F

STOCK AVAILABILITY

VOLANO TERMICO PDC

Model	MILD STEEL BUFFER TANK (suitable for heat pump) Art. Nr.	ENERGY EFFICIENCY CLASS
100	3001162311001	C
200	3001162311002	C
300	3001162311003	C
500	3001162311004	C

VOLANO TERMICO PDC

Model	MILD STEEL BUFFER TANK (suitable for heat pump) Art. Nr.	ENERGY EFFICIENCY CLASS
500	3001162311014	B

cordivari.com/erp

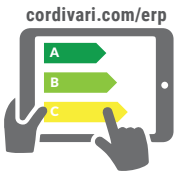

On line ErP label tool

CORDIVARI Lab

TÜV Rheinland Energie und Umwelt GmbH states that test procedures and Cordivari LAB are certified conforming to European standard EN 15332, as indicated by Ecodesign ErP Directive.

TESTED ErP

Model	Weight [Kg]	Volume [lt]	De	H	R2	H1 [mm]	H2	H3	H4	H5 Connections F	H6	A
100	23	95	461	990	1100	206	246	374	543	511	711	1"
200	41	180	517	1289	1395	206	246	489	793	836	1086	1"
300	51	280	624	1346	1490	256	276	536	816	846	1096	1"1/4
500	76	478	750	1641	1810	271	291	634	998	1091	1361	1"1/4

Model	Weight [Kg]	Volume [lt]	De	H	R2	H1 [mm]	H2	H3	H4	H5 Connections F	H6	A
500 (B)	76	478	750	1641	1810	271	291	634	998	1091	1361	1"1/4

P.E.D. product designed and produced in conformity to the article 4.3 of directive 2014/68/UE - ErP Ecodesgin directive 2009/125/CE

VOLANO TERMICO **GREZZO GC VT**

BUFFER TANK FOR HEATING AND COOLING SYSTEMS WITH INCREASED INSULATION



PRESSURE	TEMPERATURE
Pmax	Tmax
6 bar	-10 / +90 °C

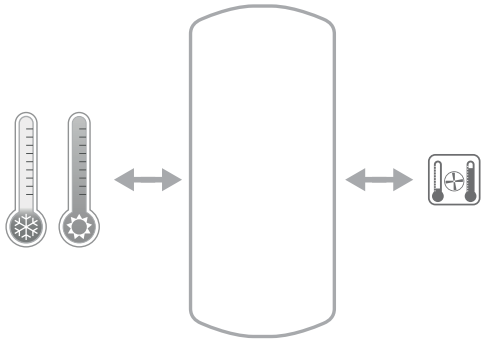

APPLICATION AND TECHNICAL DESCRIPTION
The buffer tanks VOLANO TERMICO GREZZO GC VT with increased insulation for reversible heating/cooling systems are intended for systems that work for the whole year, in which in Summer there is the need to accumulate chilled water and in Winter hot heating water.
These accumulators improve the efficiency of the system by limiting the number of hourly ignitions of the generator (whether chiller, heat pump or conventional generator) and, increasing the thermal inertia of the circuit, allowing to obtain more stable operating temperatures.

MATERIAL
Mild steel outside painted

EXTERNAL LINING
Grey PVC external lining with plastic black caps for connections.

INSULATION
Increased insulation: Internal insulation layer with closed cell polyethylene of 20 mm not self-extinguishing fixed to the tank body (not removable) coupled with an external layer of insulation of polyester fiber, thickness with high thermal insulation, material with fire resistance class B s2d0 in accordance with EN13501

WARRANTY
2 years-See general sales conditions and warranty.

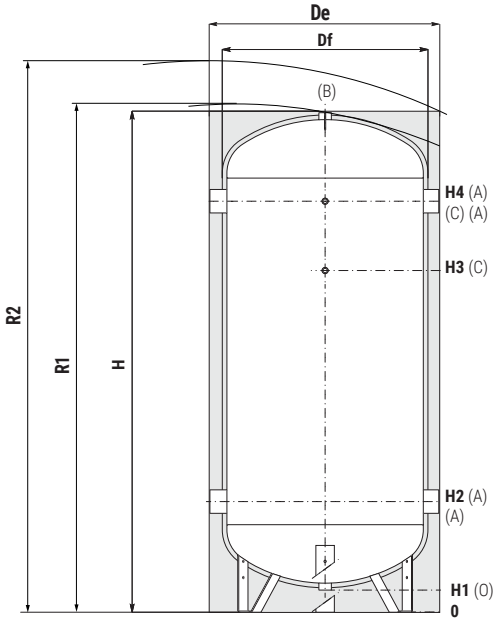

A	To the System
B	Safety Valve
C	Connection for instrumentation 1/2" F
O	Drain

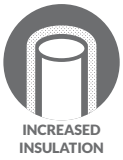

VOLANO TERMICO GREZZO GC VT

Model	INSULATION 20 mm Not self-stinguishing+ soft polyester fleece Art. Nr.	ENERGY EFFICIENCY CLASS
500	3001162150004	C
800	3001162150005	C
1000	3001162150006	C
1500	3001162150007	C
2000	3001162150008	C
2500	3001162150009	
3000	3001162310510	
4000	3001162310511	
5000	3001162310512	

cordivari.com/erp



On line ErP label tool

CORDIVARI Lab

TÜV Rheinland Energie und Umwelt GmbH states that test procedures and Cordivari LAB are certified conforming to European standard EN 15332, as indicated by Ecodesign ErP Directive.

Model	Weight	Volume	Df	De	H	R1	R2	H1	H2	H3	H4	B-O	A
	[Kg]	[lt]					[mm]					Connections F	
500	101	501	690	910	1810	1821	2030	121	441	1241	1491	1"1/4	3"
800	147	788	790	1010	2108	2119	2340	108	458	1458	1758	1"1/4	3"
1000	170	1034	890	1110	2162	2178	2440	96	479	1479	1779	1"1/2	3"
1500	183	1432	990	1250	2351	2386	2670	121	490	1700	2000	2"	3"
2000	219	1970	1140	1400	2421	2437	2800	105	509	1719	2019	2"	3"
2500	274	2300	1290	1390	2289	2304	2680	149	619	1519	1819	2"	4"
3000	321	2908	1290	1390	2804	2826	3130	149	619	1919	2319	2"	4"
4000	442	3749	1440	1540	2878	2904	3270	133	648	1948	2348	2"	4"
5000	565	4964	1640	1740	2916	2948	3400	111	656	1956	2356	2"	4"

P.E.D. product designed and produced in conformity to the article 4.3 of directive 2014/68/UE - ErP Ecodesgin directive 2009/125/CE

VOLANO TERMICO **PDC REVERSO**

WATER STORAGE FOR HEATING AND COOLING INSTALLATIONS

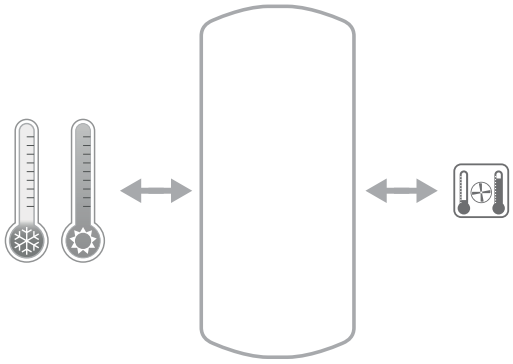

Suitable for outdoor installation

PRESSURE	TEMPERATURE
Pmax	Tmax
4 bar	-10 / +90 °C



TECHNICAL DESCRIPTION
VOLANO TERMICO PDC REVERSO is used in cooling systems to store cold water and also in heating systems to store hot water at high flow rate. Thanks to the aluminum external lining it is suitable for outdoor installation.

MATERIALE
Mild steel.

APPLICATION
Buffer either for hot or cold water.

ANTI-CORROSION TREATMENT
The anti-corrosion treatment is not necessary being installed in closed systems.

INSULATION
One layer of anti-condensation insulation plus a second layer of polyester fiber, all covered by an aluminum external cover (which can be dissembled to facilitate passage)

EXTERNAL LINING
Aluminum external cover.

CONNECTION FOR ELECTRIC IMMERSION HEATERS
1"1/2 conncetion for low temperature electric immersion heater (thermostat from 0 to +50 °C) - see the table below.

WARRANTY
2 years-See general sales conditions and warranty.

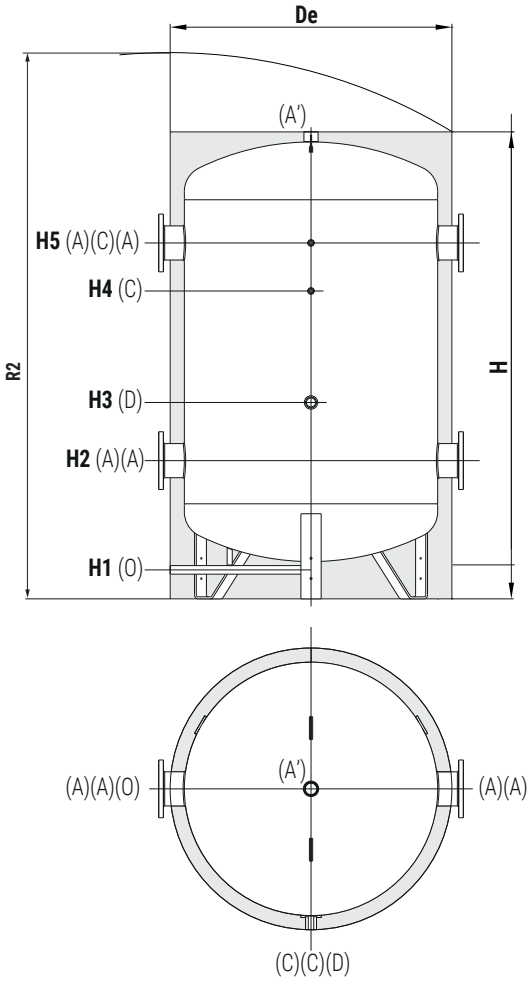

VOLANO TERMICO PDC REVERSO

Model	HARD FOAM insulation
	Art. Nr.
2500	3001162310559
3000	3001162310560
4000	3001162310561

A	To the System
A'	To the System
C	Connection for instrumentation 1/2" F
D	Connection for electric immersion heater 1"1/2 F
O	Drain

Model	Weight	Volume	DE	H	R2	H1	H2	H3	H4	H5	O	A'	A
	[Kg]	[lt]	mm									Connections F	
2500	397	2294	1250	1390	2304	2621	143	682	969	1519	1756	1"	DN150 PN16
3000	432	2988	1400	1540	2378	2760	127	711	998	1448	1785	1"	DN150 PN16
4000	494	3914	1600	1740	2386	2873	105	719	996	1426	1763	1"	DN150 PN16

P.E.D. product designed and produced in conformity to the article 4.3 of directive 2014/68/UE - ErP Ecodesgin directive 2009/125/CE

VOLANO TERMICO **CALDO-FREDDO R/C GB VT**

VERTICAL INERTIAL HOT/COLD WATER TANK



NEW

PRESSURE	TEMPERATURE
Pmax	Tmax
6 bar	-10 / +90 °C

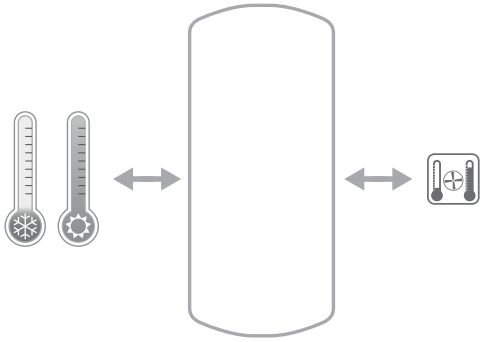

Suitable for outdoor installation

APPLICATION AND TECHNICAL DESCRIPTION
Storage of chilled or hot water for inverter installations.
These buffers have an high thermal insulation and external lining with galvanized and painted metallic cover. The anti-corrosion treatment is not necessary being installed in closed systems. They are suited for installations that works with cold water during summer and hot water during wnter.
They also allow to limit the number of switch on/off of the generator (either heat pump, chilled system or standard Generator) increasing the thermic inertia of the system and to have more stable temperatures.

MATERIAL
Mild steel
EXTERNAL LINING
Galvanized and painted metallic cover.
INSULATION
High thermal insulation with ecological polyurethane hard foam.
WARRANTY
2 years-See general sales conditions and warranty.

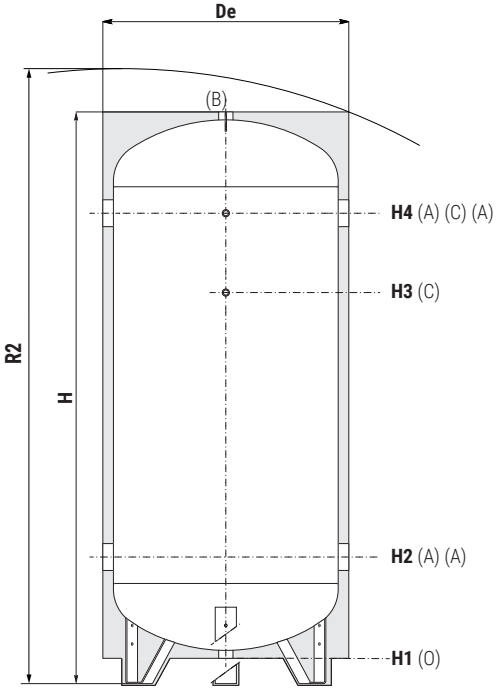

A	To the System
B	Safety Valve
C	Connection for instrumentation 1/2" F
O	Drain

STOCK AVAILABILITY

VOLANO TERMICO CALDO-FREDDO

Model / Art. Nr.		ENERGY EFFICIENCY CLASS (ErP)
100	3001162310501	**C**
200	3001162310502	**C**
300	3001162310503	**C**
500	3001162310524	**C**
800	3001162310529	**C**
1000	3001162310530	**C**
1500	3001162310527	**C**
2000	3001162310528	**C**

VOLANO TERMICO CALDO-FREDDO

Model / Art. Nr.		ENERGY EFFICIENCY CLASS (ErP)
800	3001162310525	**B**
1000	3001162310526	**B**

cordivari.com/erp

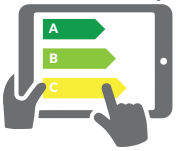

On line ErP label tool

CORDIVARI Lab

TÜV Rheinland Energie und Umwelt GmbH states that test procedures and Cordivari LAB are certified conforming to European standard EN 15332, as indicated by Ecodesign ErP Directive.

TESTED ErP

Model	Weight [Kg]	Volume [lt]	De	H	R2	H1	H2	H3	H4	B-O	A	C
											Connections F	
100	32	101	460	1006	1115	73	287	592	792	1"1/4	1"1/2	1/2"
200	53	190	510	1407	1505	68	297	927	1177	1"1/4	1"1/2	1/2"
300	67	292	610	1518	1640	129	404	994	1244	1"1/4	2"	1/2"
500	101	501	750	1790	1945	80	400	1200	1450	1"1/4	3"	1/2"
800	147	788	850	2100	2270	80	430	1437	1730	1"1/4	3"	1/2"
1000	170	1034	950	2166	2370	80	463	1463	1763	1"1/2	3"	1/2"
1500	183	1432	1100	2366	2615	100	471	1681	1981	2"	3"	1/2"
2000	219	1970	1300	2436	2770	100	506	1716	2016	2"	3"	1/2"
800 (B)	147	788	900	2100	2290	80	430	1437	1730	1"1/4	3"	1/2"
1000 (B)	170	1034	1000	2166	2390	80	463	1463	1763	1"1/2	3"	1/2"

P.E.D. product designed and produced in conformity to the article 4.3 of directive 2014/68/UE - ErP Ecodesgin directive 2009/125/CE

VOLANO TERMICO **CALDO-FREDDO R/C WB VT**

POLYWARM® COATED VERTICAL INERTIAL HOT/COLD WATER TANK

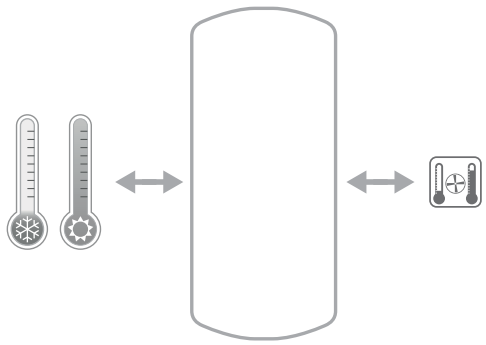

Suitable for outdoor installation

NEW



PRESSURE	TEMPERATURE
Pmax	Tmax
6 bar	-10 / +90 °C

APPLICATION AND TECHNICAL DESCRIPTION
Storage of chilled or hot water for inverter installations.
These buffers have an high thermal insulation and external lining with galvanized and painted metallic cover. Internal Polywarm® coated for clean systems installation. They are suited for installations that work with cold water during summer and hot water during winter.
They also allow to limit the number of switch on/off of the generator (either heat pump, chilled system or standard Generator) increasing the thermic inertia of the system and to have more stable temperatures.

MATERIAL
Mild steel outside - Polywarm® coated inside
EXTERNAL LINING
Galvanized and painted metallic cover.
INSULATION
High thermal insulation with ecological polyurethane hard foam.
WARRANTY
2 years-See general sales conditions and warranty.

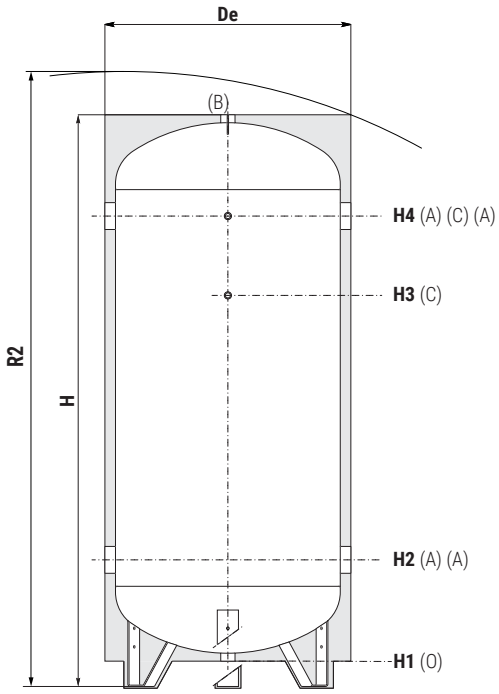

A	To the System
B	Safety Valve
C	Connection for instrumentation 1/2" F
O	Drain

POLYWARM® COATED INSIDE

VOLANO TERMICO CALDO-FREDDO WB

Model / Art. Nr.		ENERGY EFFICIENCY CLASS
100	3001162330001	**C**
200	3001162330002	**C**
300	3001162330003	**C**
500	3001162330004	**C**
800	3001162330005	**C**
1000	3001162330006	**C**

cordivari.com/erp



On line ErP label tool

CORDIVARI Lab

TÜV Rheinland Energie und Umwelt GmbH states that test procedures and Cordivari LAB are certified conforming to European standard EN 15332, as indicated by Ecodesign ErP Directive.

TESTED ErP

Model	Weight	Volume	De	H	R2	H1	H2	H3	H4	B-O	A	C
	[Kg]	[lt]									Connections F	
100	32	101	460	1006	1115	73	287	592	792	1"1/4	1"1/2	1/2"
200	53	190	510	1407	1505	68	297	927	1177	1"1/4	1"1/2	1/2"
300	67	292	610	1518	1640	129	404	994	1244	1"1/4	2"	1/2"
500	101	501	750	1790	1945	80	400	1200	1450	1"1/4	3"	1/2"
800	147	788	900	2100	2290	80	430	1437	1730	1"1/4	3"	1/2"
1000	170	1034	1000	2166	2390	80	463	1463	1763	1"1/2	3"	1/2"

P.E.D. product designed and produced in conformity to the article 4.3 of directive 2014/68/UE - ErP Ecodesgin directive 2009/125/CE

ACQUA REFRIGERATA **ZINCATO ZB VT**

VERTICAL GALVANIZED CHILLED WATER TANK



PRESSURE	TEMPERATURE
Pmax	Tmax
6 bar	-10 / +60 °C

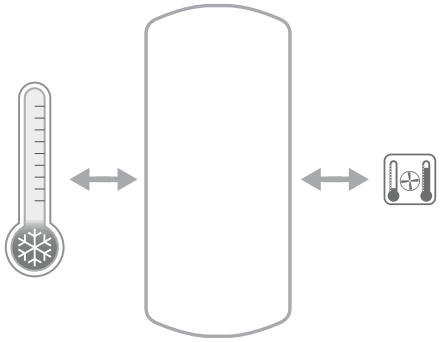

Suitable for outdoor installation

APPLICATION AND TECHNICAL DESCRIPTION
Storage of chilled water for cooling systems.
These buffers have rigid insulation and external galvanized and painted metallic cover.
They are used to increase the thermal inertia and, for those installations with low water-capacity, avoiding that the chilling generator is continuously working.
EXTERNAL LINING
Galvanized and painted metallic cover.

MATERIAL
These tanks are galvanized inside and outside, with immersion in a pool of fused zinc with pureness not below 99,99% (Uni EN 1179).
INSULATION
High thermal insulation with ecological polyurethane hard foam.
WARRANTY
2 years-See general sales conditions and warranty.

Model	ACQ. REF. ZB VT (RIGID INSULATION)
	Art. Nr.
100	3001162310001
200	3001162310002
300	3001162310003
500	3001162310004
800	3001162310005
1000	3001162310006
1500	3001162310007
2000	3001162310008

STOCK AVAILABILITY

SUITABLE FOR OUTDOOR INSTALLATION

A	To the System
B	Safety Valve
C	Connection for instrumentation 1/2" F
O	Drain

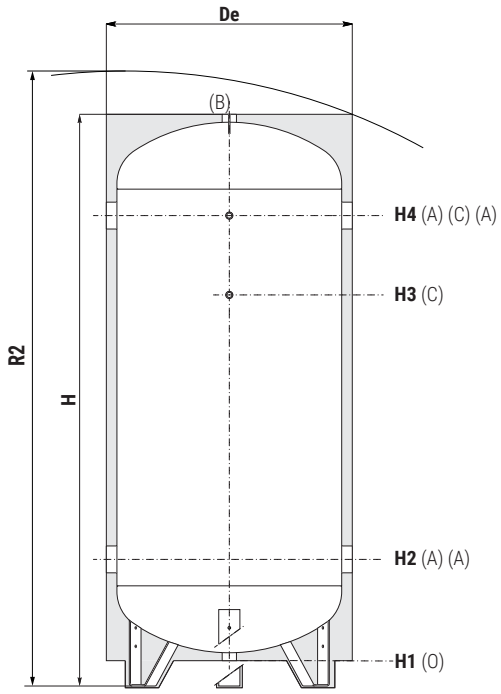

Model	Weight	Volume	De	H	R2	H1	H2	H3	H4	B-O	A	C
	[Kg]	[lt]				[mm]					Connections F	
100	32	101	460	1006	1115	73	287	592	792	1"1/4	1"1/2	1/2"
200	53	190	510	1407	1505	68	297	927	1177	1"1/4	1"1/2	1/2"
300	67	292	610	1518	1640	129	404	994	1244	1"1/4	2"	1/2"
500	101	501	750	1790	1945	80	400	1200	1450	1"1/4	3"	1/2"
800	147	788	900	2100	2290	80	430	1437	1730	1"1/4	3"	1/2"
1000	170	1034	1000	2166	2390	80	463	1463	1763	1"1/2	3"	1/2"
1500	183	1432	1100	2366	2615	100	471	1681	1981	2"	3"	1/2"
2000	219	1970	1300	2436	2770	100	506	1716	2016	2"	3"	1/2"

P.E.D. product designed and produced in conformity to the article 4.3 of directive 2014/68/UE - ErP Ecodesgin directive 2009/125/CE

ACQUA REFRIGERATA **INOX**
VERTICAL STAINLESS STEEL 304 CHILLED WATER TANK

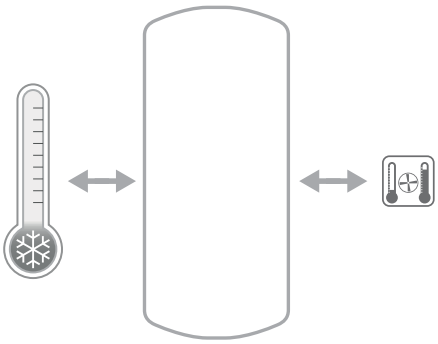

Suitable for outdoor installation

PRESSURE	TEMPERATURE
Pmax	Tmax
6 bar	-30 / +60 °C



TECHNICAL DESCRIPTION
The chilled water accumulation tanks are designed to be installed in air conditioning systems to increase inertia and in those with low water content, to minimize the number of hourly starts of the refrigeration unit to safe its duration
MATERIAL
Stainless steel 304

EXTERNAL LINING
Galvanized and painted metallic cover.
INSULATION
High thermal insulation with ecological polyurethane hard foam.
WARRANTY
2 years-See general sales conditions and warranty.

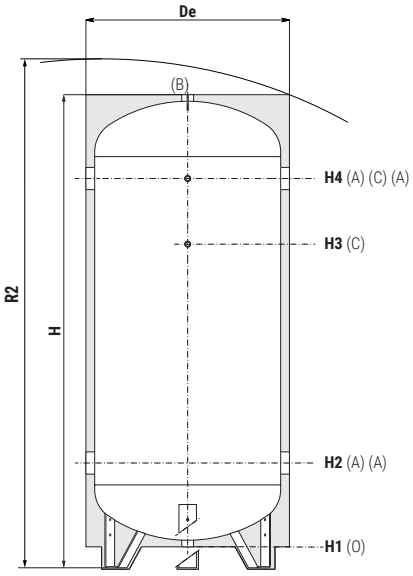

304 STAINLESS STEEL STORAGE

Model	ACQ. REF. XB 20 VT
	Art. Nr.
100	3001012310001
200	3001012310002
300	3001012310003
500	3001012310004
800	3001012310005
1000	3001012310006

A	To the System
B	Safety Valve
C	Connection for instrumentation 1/2" F
O	Drain

Model	Weight	Volume	De	H	R2	H1	H2	H3	H4	B-O	A	C
	[Kg]	[lt]				[mm]				Connections F		
100	27	100	460	1006	1115	85	296	601	801	1"1/4	1"1/2	1/2"
200	40	188	520	1407	1505	80	301	931	1181	1"1/4	1"1/2	1/2"
300	51	289	620	1515	1645	69	336	926	1176	1"1/4	2"	1/2"
500	87	495	720	1803	1950	58	370	1170	1420	1"1/4	3"	1/2"
800	121	788	830	2110	2275	116	458	1458	1758	1"1/4	3"	1/2"
1000	140	1036	930	2160	2360	102	480	1480	1780	1"1/2	3"	1/2"

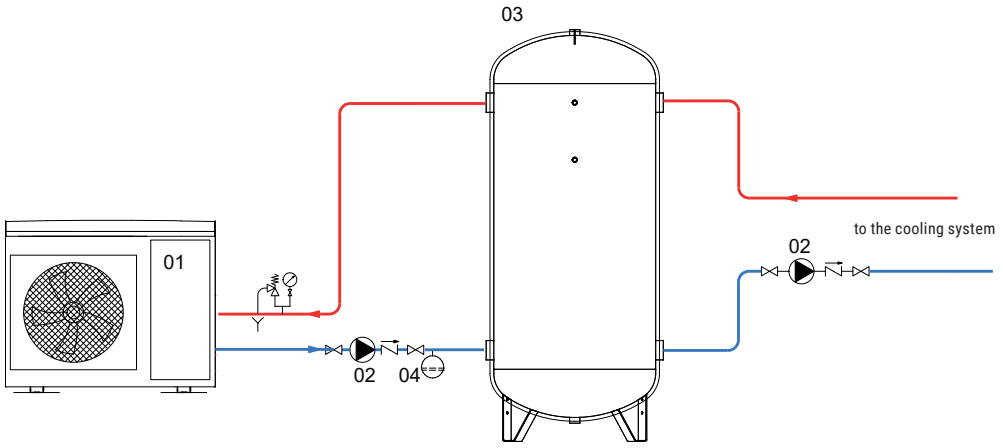

01	Generator
02	Air conditioning system circulation group
03	Acqua Refrigerata tank
04	Expansion vessel

P.E.D. product designed and produced in conformity to the article 4.3 of directive 2014/68/UE - ErP Ecodesgin directive 2009/125/CE

ACQUA REFRIGERATA **GREZZO GC 20 VT**

VERTICAL NOT TREATED CHILLED WATER TANK



PRESSURE	TEMPERATURE
Pmax	Tmax
6 bar	-10 / +90 °C

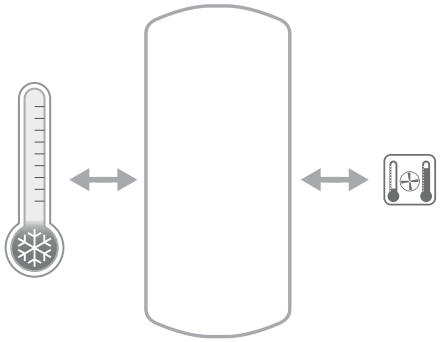

APPLICATION AND TECHNICAL DESCRIPTION
Storage of chilled water for cooling systems.
Vertical inertial water tanks are used to increase the thermal inertia and, for those installations with a low water-capacity, to avoid that the chiller is continuously working.

MATERIAL
Mild steel outside painted

EXTERNAL LINING
Blue PVC with plastic black caps for connections.

INSULATION
20 mm fixed polyethylene anti-condensation. Not self-estinguishing version. Not removable from the tank.

WARRANTY
2 years-See general sales conditions and warranty.

STOCK AVAILABILITY

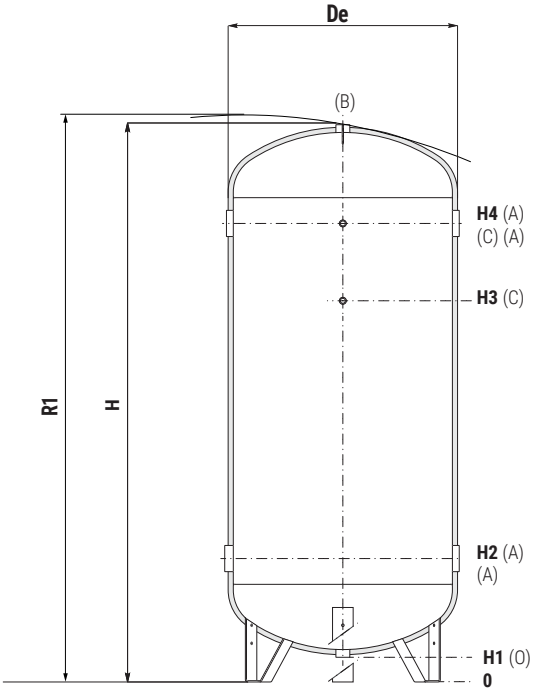

A	To the System
B	Safety Valve
C	Connection for instrumentation 1/2" F
O	Drain

INTERNAL BULKHEADS VERSION AVAILABLE ON REQUEST

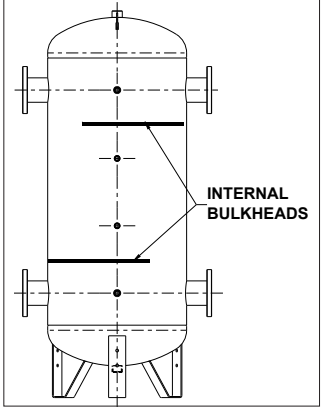

Model	ACQ. REF. GC 20 VT (INSULATION 20 mm Not self-estinguishing)
	Art. Nr.
100	3001162131101
200	3001162131102
300	3001162131103
500	3001162131104
800	3001162131105
1000	3001162131106
1500	3001162131107
2000	3001162131108
2500	3001162131113
3000	3001162131109
4000	3001162131110
5000	3001162131112

Model	Weight	Volume	DE	H	R1	H1	H2	H3	H4	B-O	A	C
	[Kg]	[lt]				[mm]				Connections F		
100	32	101	440	1006	1017	73	287	592	792	1"1/4	1"1/2	1/2"
200	53	190	490	1407	1415	68	297	927	1177	1"1/4	1"1/2	1/2"
300	67	292	590	1518	1529	129	404	994	1244	1"1/4	2"	1/2"
500	101	501	690	1810	1821	121	441	1241	1491	1"1/4	3"	1/2"
800	147	788	790	2108	2119	108	458	1458	1758	1"1/4	3"	1/2"
1000	170	1034	890	2162	2178	96	479	1479	1779	1"1/2	3"	1/2"
1500	183	1432	990	2351	2386	121	490	1700	2000	2"	3"	1/2"
2000	219	1970	1140	2421	2437	105	509	1719	2019	2"	3"	1/2"
2500	274	2300	1290	2289	2304	149	619	1519	1819	2"	4"	1/2"
3000	321	2908	1290	2804	2826	149	619	1919	2319	2"	4"	1/2"
4000	442	3749	1440	2878	2904	133	648	1948	2348	2"	4"	1/2"
5000	565	4964	1640	2916	2948	111	656	1956	2356	2"	4"	1/2"

P.E.D. product designed and produced in conformity to the article 4.3 of directive 2014/68/UE - ErP Ecodesgin directive 2009/125/CE

ACQUA REFRIGERATA **GREZZO GC 20 OR**

HORIZONTAL NOT TREATED CHILLED WATER TANK

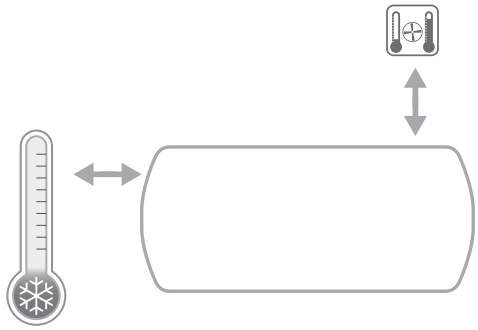



PRESSURE	TEMPERATURE
Pmax	Tmax
6 bar	-10 / +90 °C

APPLICATION AND TECHNICAL DESCRIPTION
Storage of chilled water for cooling systems.
Horizontal inertial water tanks are used to increase the thermal inertia and, for those installations with a low water-capacity, to avoid that the chiller is continuously working.
MATERIAL
Mild steel outside painted

EXTERNAL LINING
Blue PVC with plastic black caps for connections.
INSULATION
20 mm fixed polyethylene anti-condensation. Not self-estinguishing version. version. Not removable from the tank.
WARRANTY
2 years-See general sales conditions and warranty.

Model	ACQ. REF. GC 20 OR (INSULATION 20 mm Not self-estinguishing)
	Art. Nr.
100	3001161031001
200	3001161031002
300	3001161031003
500	3001161031004
800	3001161031005
1000	3001161031006
1500	3001161031007
2000	3001161031008
2500	3001161031013
3000	3001161031009
4000	3001161031010
5000	3001161031012

A	To the System
B	Safety Valve/Additional connection
C	Connection for instrumentation 1/2" F

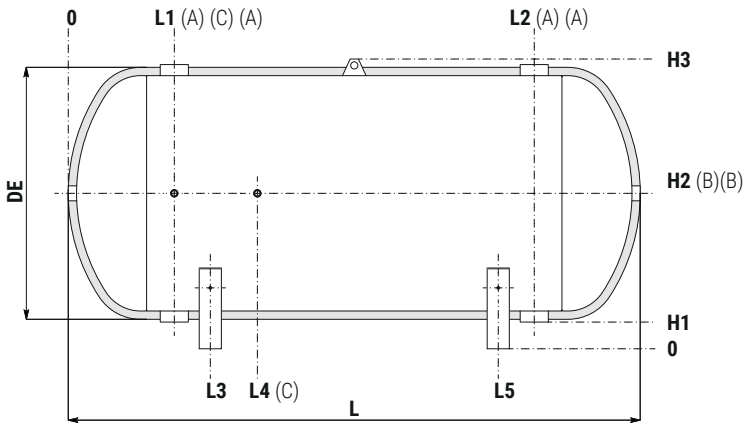

Model	Weight	Volume	DE	L	L1	L2	L3	L4	L5	H1	H2	H3	B	A	C
	[Kg]	[lt]	[mm]										Connections F		
100	32	99	440	934	215	720	290	415	645	63	293	523	1"1/4	1"1/2	1/2"
200	53	187	490	1339	230	1110	335	480	1005	61	316	571	1"1/4	1"1/2	1/2"
300	68	288	590	1389	275	1115	365	525	1025	115	425	760	1"1/4	2"	1/2"
500	102	496	690	1689	320	1370	415	570	1275	107	472	857	1"1/4	3"	1/2"
800	148	788	790	2000	350	1650	480	650	1520	101	516	951	1"1/4	3"	1/2"
1000	170	1034	890	2066	383	1683	513	683	1553	96	561	1046	1"1/2	3"	1/2"
1500	184	1432	990	2250	370	1880	505	670	1745	82	597	1142	2"	3"	1/2"
2000	220	1970	1140	2320	405	1915	525	705	1795	73	663	1283	2"	3"	1/2"
2500	284	2300	1290	2140	470	1670	620	770	1520	154	829	1524	2"	4"	1/2"
3000	330	2908	1290	2640	470	2170	620	870	2020	154	829	1524	2"	4"	1/2"
4000	452	3749	1440	2730	515	2215	665	915	2065	142	892	1662	2"	4"	1/2"
5000	574	4964	1640	2790	545	2245	695	945	2095	125	975	1845	2"	4"	1/2"

P.E.D. product designed and produced in conformity to the article 4.3 of directive 2014/68/UE - ErP Ecodesgin directive 2009/125/CE

ACQUA REFRIGERATA **ZINCATO ZC 20 VT**

VERTICAL GALVANIZED CHILLED WATER TANK



PRESSURE	TEMPERATURE
Pmax	Tmax
6 bar	-10 / +60 °C

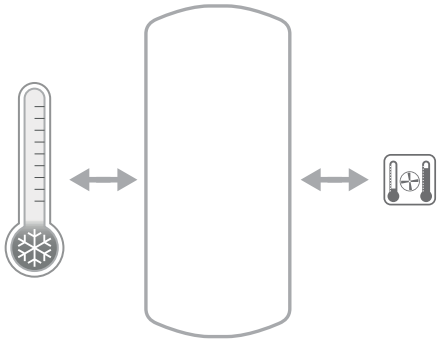

APPLICATION AND TECHNICAL DESCRIPTION
Storage of chilled water for cooling systems.
Vertical inertial water tanks are used to increase the thermal inertia and, for those installations with a low water-capacity, to avoid that the chiller is continuously working. These tanks are made in galvanized mild steel.
EXTERNAL LINING
Blue PVC with plastic black caps for connections.

MATERIAL
These tanks are galvanized inside and outside, with immersion in a pool of fused zinc with pureness not below 99,99% (Uni EN 1179).
INSULATION
20 mm fixed polyethylene anti-condensation. Not self-estinguishing version. Not removable from the tank.
WARRANTY
2 years-See general sales conditions and warranty.

STOCK AVAILABILITY

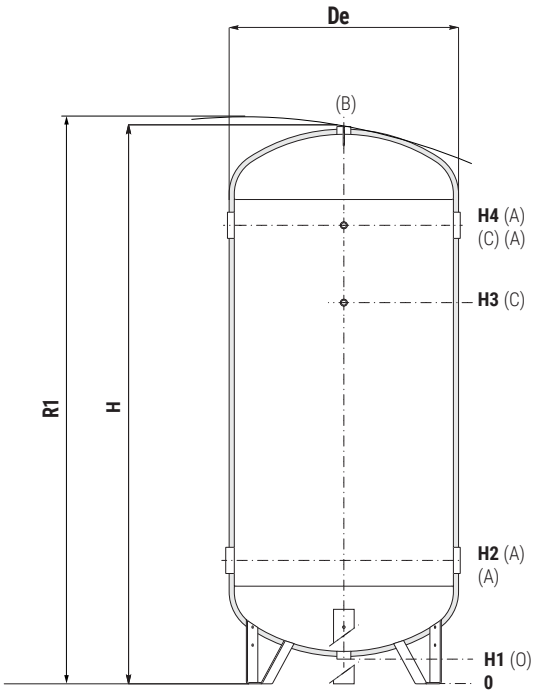

Model	ACQ. REF. ZC 20 VT (INSULATION 20 mm Not self-estinguishing)
	Art. Nr.
100	3001162130001
200	3001162130002
300	3001162130003
500	3001162130004
800	3001162130005
1000	3001162130006
1500	3001162130107
2000	3001162130108
2500	3001162130113
3000	3001162130109
4000	3001162130110
5000	3001162130112

A	To the System
B	Safety Valve
C	Connection for instrumentation 1/2" F
O	Drain

Model	Weight	Volume	DE	H	R1	H1	H2	H3	H4	B-O	A	C
	[Kg]	[lt]				[mm]				Connections F		
100	32	101	440	1006	1017	73	287	592	792	1"1/4	1"1/2	1/2"
200	53	190	490	1407	1415	68	297	927	1177	1"1/4	1"1/2	1/2"
300	67	292	590	1518	1529	129	404	994	1244	1"1/4	2"	1/2"
500	101	501	690	1810	1821	121	441	1241	1491	1"1/4	3"	1/2"
800	147	788	790	2108	2119	108	458	1458	1758	1"1/4	3"	1/2"
1000	170	1034	890	2162	2178	96	479	1479	1779	1"1/2	3"	1/2"
1500	183	1432	990	2351	2386	121	490	1700	2000	2"	3"	1/2"
2000	219	1970	1140	2421	2437	105	509	1719	2019	2"	3"	1/2"
2500	274	2300	1290	2289	2304	149	619	1519	1819	2"	4"	1/2"
3000	321	2908	1290	2804	2826	149	619	1919	2319	2"	4"	1/2"
4000	442	3749	1440	2878	2904	133	648	1948	2348	2"	4"	1/2"
5000	565	4964	1640	2916	2948	111	656	1956	2356	2"	4"	1/2"

P.E.D. product designed and produced in conformity to the article 4.3 of directive 2014/68/UE - ErP Ecodesgin directive 2009/125/CE

ACQUA REFRIGERATA **ZINCATO ZC 20 OR**

HORIZONTAL GALVANIZED CHILLED WATER TANK

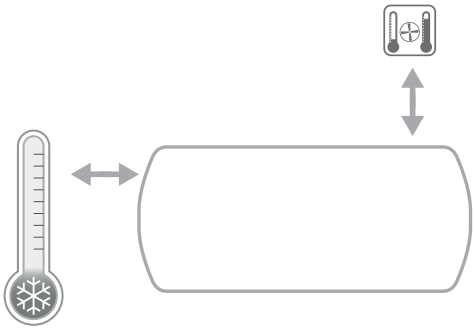



PRESSURE	TEMPERATURE
Pmax	Tmax
6 bar	-10 / +60 °C

APPLICATION AND TECHNICAL DESCRIPTION
Storage of chilled water for cooling systems.
Horizontal inertial water tanks are used to increase the thermal inertia and, for those installations with a low water-capacity, to avoid that the chiller is continuously working. These tanks are made in galvanized mild steel.

EXTERNAL LINING
Blue PVC with plastic black caps for connections.

MATERIAL
These tanks are galvanized inside and outside, with immersion in a pool of fused zinc with pureness not below 99,99% (Uni EN 1179).

INSULATION
20 mm fixed polyethylene anti-condensation. Not self-estinguishing version. Not removable from the tank.

WARRANTY
2 years-See general sales conditions and warranty.

Model	ACQ. REF. ZC 20 OR (INSULATION 20 mm Not self-estinguishing)
	Art. Nr.
100	3001161030001
200	3001161030002
300	3001161030003
500	3001161030004
800	3001161030005
1000	3001161030006
1500	3001161030107
2000	3001161030108
2500	3001161030113
3000	3001161030109
4000	3001161030110
5000	3001161030112

A	To the System
B	Safety Valve/Additional connection
C	Connection for instrumentation 1/2" F

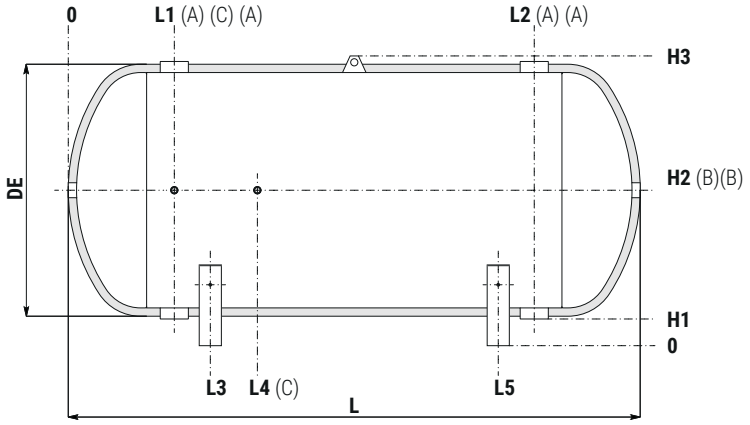

Model	Weight	Volume	DE	L	L1	L2	L3	L4	L5	H1	H2	H3	B	A	C
	[Kg]	[lt]	[mm]										Connections F		
100	32	99	440	934	215	720	290	415	645	63	293	523	1"1/4	1"1/2	1/2"
200	53	187	490	1339	230	1110	335	480	1005	61	316	571	1"1/4	1"1/2	1/2"
300	68	288	590	1389	275	1115	365	525	1025	115	425	760	1"1/4	2"	1/2"
500	102	496	690	1689	320	1370	415	570	1275	107	472	857	1"1/4	3"	1/2"
800	148	788	790	2000	350	1650	480	650	1520	101	516	951	1"1/4	3"	1/2"
1000	170	1034	890	2066	383	1683	513	683	1553	96	561	1046	1"1/2	3"	1/2"
1500	184	1432	990	2250	370	1880	505	670	1745	82	597	1142	2"	3"	1/2"
2000	220	1970	1140	2320	405	1915	525	705	1795	73	663	1283	2"	3"	1/2"
2500	284	2300	1290	2140	470	1670	620	770	1520	154	829	1524	2"	4"	1/2"
3000	330	2908	1290	2640	470	2170	620	870	2020	154	829	1524	2"	4"	1/2"
4000	452	3749	1440	2730	515	2215	665	915	2065	142	892	1662	2"	4"	1/2"
5000	574	4964	1640	2790	545	2245	695	945	2095	125	975	1845	2"	4"	1/2"

P.E.D. product designed and produced in conformity to the article 4.3 of directive 2014/68/UE - ErP Ecodesgin directive 2009/125/CE





PRESSURIZED WATER TANKS

WATER PRESSURE TANKS

TESTED PRESSURIZED TANKS P.E.D.
CE marked storage tanks for pressurized water in compliance with Directive 2014/68/UE P.E.D.
The range of tested pressurized tanks **PED** includes all the pressurized storages designed for water-lifting systems, for accumulation of compressed air or for closed expansion vessels.
Air-cushion autoclaves and membrane expansion vessels are part of this family. These products are manufactured according the European Directive for pressurized devices (2014/68/UE Pressure Equipment Device) and are designed to contain dangerous fluids at high pressure and/or temperature.



SIMPLE PRESSURE VESSEL DIRECTIVE (SPVD)
The SPVD directive is applicable to pressurized tanks for air or nitrogen, made in steel or aluminum alloy. The working pressure range must be between 0,5 bar and 30 bar. The result of the multiplication of the maximum working pressure and the volume of the tank (PS x V) must be between 50 bar*lt and 10.000 bar*lt. The working temperature range is -50°C to +300°C for steel and max 100°C for aluminum.





THE PRESSURE EQUIPMENT DEVICE (P.E.D.) DIRECTIVE
Any device that overcomes the maximum working pressure limit of **0,5 BAR** is subject to design and manufacture indications according to the directive 2014/68/EU.

This directive establishes an index of hazardousness of the equipment (tanks in our case), determined according to the type of fluid contained, the maximum temperature admissible, the pressure and the capacity of the tank.

Fluids are categorized in 2 groups:
• **GROUP 1**, hazardous fluids (explosive, flammable, easily flammable, highly flammable, oxidizer, toxic and highly toxic)
• **GROUP 2**, not hazardous fluids (all fluids which are not included in **GROUP 1**)

Note: all the Cordivari products involved in the application of the PED directive are intended to contain fluids belonging to GROUP 2 (water, steam, compressed air).
The categorization of the equipment in accordance with the level of hazardousness is established in the Annex II of the directive that defines six classes:

Category	Application of the PED directive	CE Marking	Reference
PS ≤ 0,5 and specific exceptions	Not applicable	No	Art. 1.1 and 1.2
PS ≥ 0,5 in conditions of low hazard level	Applicable	No	Art. 4.3
Category I	Applicable	Yes	Table from 1 to 9 Annex II
Category II	Applicable	Yes	
Category III	Applicable	Yes	
Category IV	Applicable	Yes	

AUTOCLAVE **ZINCATA Z PED VT**

CERTIFIED VERTICAL GALVANIZED PRESSURE VESSEL (STANDARD 2014/68/UE)



STOCK AVAILABILITY

CE

PRESSURE	TEMPERATURE
Pmax	Tmax
[*see table chart*]	-10 / +50 °C

ON REQUEST:
Insulation version with elastolen 20 mm – anti-condensation

Model	AUTOCL. Z VT Art. Nr.	Working Pressure [Bar]
100	3052171990001	**8**
200	3052171990022	
300	3052171990003	
500	3052171990004	
750	3052171990025	
1000	3052171990026	
1500	3051171990015	
2000	3051171990016	
2500	3051171990017	
3000	3051171990068	
4000	3051171990019	
5000 ø1450	3051171990020	
5000 ø1600	3051172020007	
8000	3051172020011	
10000	3051172020012	

Models from 100 to 1000 are provided with safety valve and pressure gauge.
Models 5000 (Ø1600), 8000 and 1000 are provided with manhole.

Model	AUTOCL. Z VT Art. Nr.	Working Pressure [Bar]
100	3052171990015	**11,76**
200	3051171990074	
300	3051171990025	
500	3051171990026	
750	3051171990077	**12**
1000	3051171990078	
1500	3051171990029	
2000	3051171990030	
2500	3051171990031	
3000	3051171990082	
4000	3051172020008	
5000 ø1450	3051172020004	
8000	3051172020013	
10000	3051172020014	

Models from 100 and 500 are provided with safety valve and pressure gauge.
Models from 4000 to 10000 are provided with manhole.

APPLICATION AND TECHNICAL DESCRIPTION

Air cushion pressure vessels.
Suitable to supply water to the highest floors of the buildings and to compensate the water shortage of the water-works. The air cushion pressure vessels Z PED VT are made for water pumping and they work as a pressured water lung that, if correctly dimensioned, can limit the self-starting of the pump.
These products are made in galvanized mild steel.

ANTI-CORROSION TREATMENT

These tanks are galvanized inside and outside, with immersion in a pool of fused zinc with pureness not below than 99,99% (Uni EN 1179)

DOCUMENTS ATTACHED

- CE certification
- User Instructions

CERTIFICATIONS

The Z PED VT pressure vessels are made according to the security policy of the standard 2014/68/UE that rules the pressurized products. Under surveillance of the Notified Body, a CE mark is stuck on them as well as the following project data that characterize the product:
- Pressurized fluid: water + air or nitrogen
- Fluid group: 2
- Max operating pressure: see the table chart
- Temperature: -10/+50 °C

WARRANTY

2 years-See general sales conditions and warranty.

To quickly determine both the capacity of the pressure vessel and the pump according to the number of the flats, you can use the following chart (always valid for 15 self-starting):

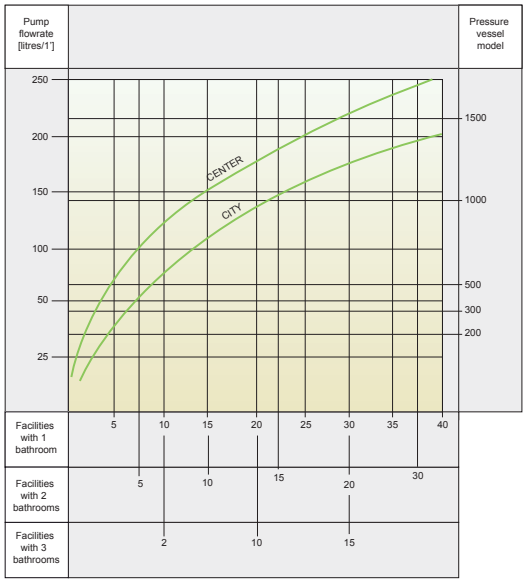

AUTOCLAVE Z PED OR

CERTIFIED HORIZONTAL GALVANIZED PRESSURE VESSEL



Model	AUTOCL. Z OR Art. Nr.	Max Pressure [Bar]
100	3052170990001	**8**
200	3052170990022	
300	3052170990003	
500	3052170990004	
750	3052170990025	
1000	3052170990026	
1500	3051170990015	
2000	3051170990016	
3000	3051170990068	
4000	3051170990019	
5000	3051170990020	

Model	AUTOCL. Z OR Art. Nr.	Max Pressure [Bar]
100	3052170990015	**11,76**
200	3051170990072	
300	3051170990025	
500	3051170990026	
750	3051170990077	**12**
1000	3051170990078	
1500	3051170990040	
2000	3051170990030	
2500	3051170990041	
3000	3051170990082	
4000	3051170990042	
5000	3051170990044	

AUTOCLAVE **ZINCATA Z PED VT**

CERTIFIED VERTICAL GALVANIZED PRESSURE VESSEL (STANDARD 2014/68/UE)

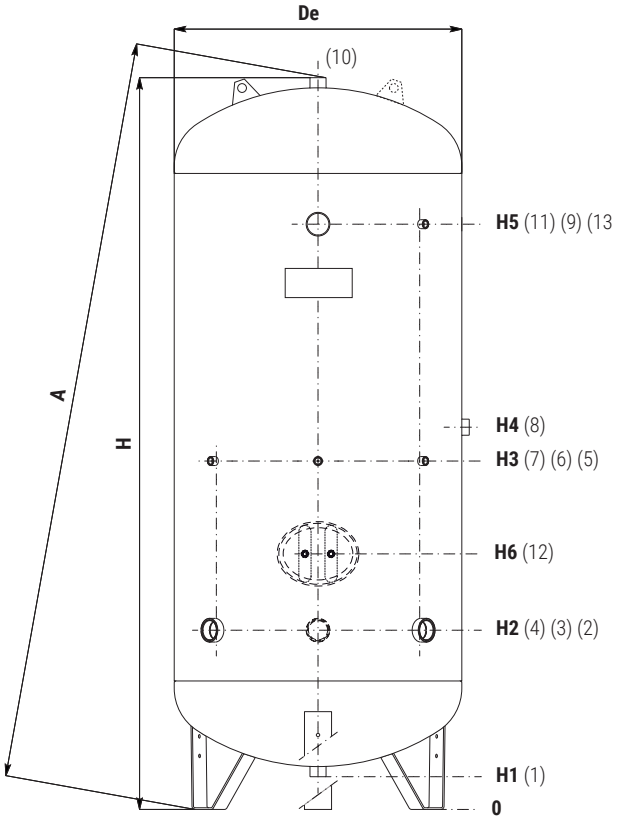

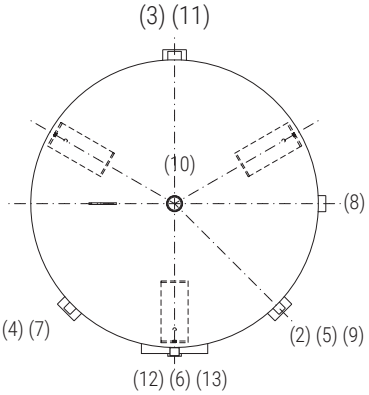

1	Drain
2 **3** **4**	Supply - Use
5	Visual level indicator
6 **7**	Control features
8	Level switch – Pressure switch
9	Visual level indicator
10	Safety Valve
11	Level switch – Pressure switch
12	Manhole 400 x 300 (if required)
13	Instrumentation 2" (only on 8000-10000 models)



Manometer



Safety Valve

As standard for pressure vessels from 100 to 1000 lt (8 bar)



The LEVEL INDICATOR KIT is available on demand. See the Accessories section for further information.

	Model	De	H	A	H1	H2	H3	H4	H5	H6	1-10	2-3-4	11	5-6-7-9	8
		[mm]									Connections F				
WORKING PRESSURE 8 bar	**100**	400	1055	1065	90	350	500	600	800	-	1"1/4	1"	-	1/2"	1" 1/4
	200	450	1420	1435	85	355	655	755	1155	-	1"1/4	1"	-	1/2"	1" 1/4
	300	550	1530	1555	140	435	735	835	1235	-	1"1/4	1" 1/4	-	1/2"	1" 1/4
	500	650	1825	1840	135	455	855	955	1505	-	1"1/4	1" 1/2	-	1/2"	1" 1/4
	750	790	1865	1880	115	515	965	1065	1465	-	1"1/4	1" 1/2	-	1/2"	1" 1/4
	1000	790	2380	2395	110	520	1020	1120	1920	-	1"1/4	1" 1/2	-	1/2"	1" 1/4
	1500	950	2470	2490	115	570	1070	1170	2020	-	2"	2"	-	1/2"	1" 1/4
	2000	1100	2535	2560	100	595	1095	1195	2045	-	2"	2"	-	1/2"	1" 1/4
	2500	1200	2660	2690	140	680	1280	1380	2130	-	2"	3"	-	1/2"	1" 1/4
	3000	1200	3000	3075	135	720	1320	1420	2420	-	2"	3"	-	1/2"	2"
	4000	1450	3000	3030	115	710	1310	1410	2410	-	2"	3"	2"	1/2"	2"
	5000	1450	3500	3525	115	710	1610	1710	2910	-	2"	3"	2"	1/2"	2"
	5000	1600	3050	3090	100	725	1325	1425	2425	1025	2"	3"	2"	1/2"	2"

Models from 100 to 1000 are provided with security valve and pressure gauge. Models 5000 (Ø1600), 8000 and 10000 are provided with manhole.

WORKING PRESSURE 11,76 bar	**100**	400	1055	1065	90	350	500	600	800	-	1"1/4	1"	-	1/2"	1"1/4
	200	450	1420	1435	85	355	655	755	1155	-	1"1/4	1"	-	1/2"	1"1/4
	300	550	1530	1540	140	435	735	835	1235	-	1"1/4	1"1/4	-	1/2"	1"1/4
	500	650	1825	1840	135	455	855	955	1505	-	1"1/4	1"1/2	-	1/2"	1"1/4
WORKING PRESSURE 12 bar	**750**	790	1865	1880	115	515	965	1065	1465	-	1"1/4	1"1/2	-	1/2"	1"1/4
	1000	790	2380	2395	110	520	1020	1120	1920	-	1"1/4	1"1/2	-	1/2"	1"1/4
	1500	950	2490	2515	115	570	1070	1170	2020	-	2"	2"	-	1/2"	1"1/4
	2000	1100	2535	2560	100	595	1095	1195	2045	-	2"	2"	-	1/2"	1"1/4
	2500	1200	2660	2690	140	680	1280	1380	2130	-	2"	3"	-	1/2"	1"1/4
	3000	1200	3000	3075	135	720	1320	1420	2420	-	2"	3"	-	1/2"	2"
	4000	1450	3000	3030	115	710	1310	1410	2410	1011	2"	3"	2"	1/2"	2"
	5000	1450	3500	3525	115	710	1610	1710	2910	1165	2"	3"	2"	1/2"	2"

Models from 100 to 500 are provided with security valve and pressure gauge. Models from 4000 to 10000 Lt are provided with manhole.

AUTOCLAVE **INOX X PED VT**

CERTIFIED VERTICAL STAINLESS STEEL 316L PRESSURE VESSEL (DIRECTIVE 2014/68/UE)



PRESSURE	TEMPERATURE
Pmax	Tmax
8 bar	-10 / +50 °C

Model	AUTOCL. X PED VT
	Art. Nr.
100	3051052010001
200	3051052010002
300	3051052010003
500	3051052010004
750	3051052010005
1000	3051052010006
1500	3051052010007
2000	3051052010008
3000	3051052010009
4000	3051052010010
5000	3051052010011

HORIZONTAL VERSION



Model	AUTOCL. X PED OR
	Art. Nr.
100	3051051010001
200	3051051010002
300	3051051010003
500	3051051010004
750	3051051010005
1000	3051051010006
1500	3051051010007
2000	3051051010008
3000	3051051010009
4000	3051051010010
5000	3051051010011

APPLICATION AND TECHNICAL DESCRIPTION

Air cushion pressure vessels.
Suitable to supply water to the highest floor of the buildings and to compensate the water shortage of the water-works.
The air cushion pressure vessels X PED VT are made for the water pumping and they work as a pressured water lung that, if correctly dimensioned, can limit the self-starting of the pump. These products are entirely made in Stainless steel 316L.

DOCUMENTS ATTACHED

- CE certification
- User Instructions

CERTIFICATIONS

The X PED VT pressure vessels are made according to the security policy of the standard 2014/68/UE that rules the pressurized products. Under surveillance of the Notified Body, a CE mark is stuck on them as well as the following project data that characterize the product:

- Pressurized fluid: water + air or nitrogen
- Fluid group: 2
- Max operating pressure: see the table chart
- Temperature: -10/+50 °C

WARRANTY

2 years
See general sales conditions and warranty.

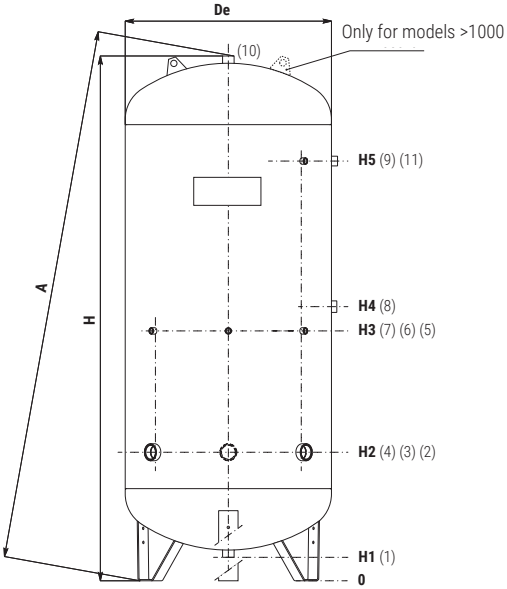

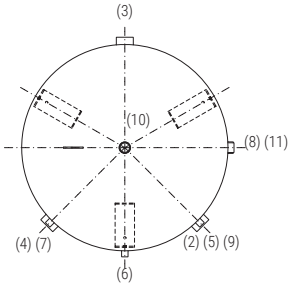

1	Drain
2-3-4	Input - use
5	Visual level indicator
6-7	Control elements
8	Level switch – Pressure switch
9	Visual level indicator
10	Safety Valve
11	Level switch – Pressure switch



Manometer



Safety Valve

As standard for pressure vessels from 100 to 1000 lt (8 bar)

Model	De	H	A	H1	H2	H3	H4	H5	1-8-10	2-3-4	5-6-7-9	11
	[mm]								Connections F			
100	400	1071	1095	97	372	522	622	797	1" 1/4	1"	1/2"	-
200	450	1459	1490	70	365	665	765	1165	1" 1/4	1"	1/2"	-
300	550	1554	1585	135	445	745	845	1245	1" 1/4	1" 1/4	1/2"	-
500	650	1847	1880	127	462	862	962	1512	1" 1/4	1" 1/2	1/2"	1"
750	750	2133	2170	103	518	968	1068	1718	1" 1/4	2"	1/2"	1"
1000	850	2633	2665	103	518	1168	1268	2218	1" 1/4	2"	1/2"	1"
1500	1000	2295	2350	105	600	1100	1200	1800	1" 1/4	2"	1/2"	1"
2000	1000	2795	2840	105	600	1250	1350	2300	1" 1/4	2"	1/2"	1"
3000	1250	2880	2955	110	645	1245	1345	2345	1" 1/4	3"	1/2"	1"
4000	1450	2973	3070	84	679	1279	1379	2379	1" 1/4	3"	1/2"	1"
5000	1450	3473	3555	84	679	1579	1679	2879	1" 1/4	3"	1/2"	1"

SERBATOIO **INOX X SC VT**

VERTICAL STAINLESS STEEL 304 TANK FOR PRESSURIZED COLD WATER STORAGE

Model	SERB. X SC VT
	Art. Nr.
100	3251012010001
200	3251012010002
300	3251012010003
500	3251012010004
1000	3251012010006
1500	3251012010007
2000	3251012010008
2500	3251012010009
3000	3251012010010
4000	3251012010011
5000ø1600	3251012010013

STOCK AVAILABILITY



PRESSURE	TEMPERATURE
Pmax	Tmax
6 bar	0 / +50 °C

APPLICATION AND TECHNICAL DESCRIPTION
Pressurized cold water storage. Tanks for pressurized water storage are designed for those water systems that need to store pressurized cold water.
They cannot work as pressure vessels.
These products are made in Stainless steel AISI 304.

MATERIAL
Stainless steel AISI 304 suitable for D.H.W. according to D.M. n.174 dated 06.04.04.

WARRANTY
2 years
See general sales conditions and warranty.

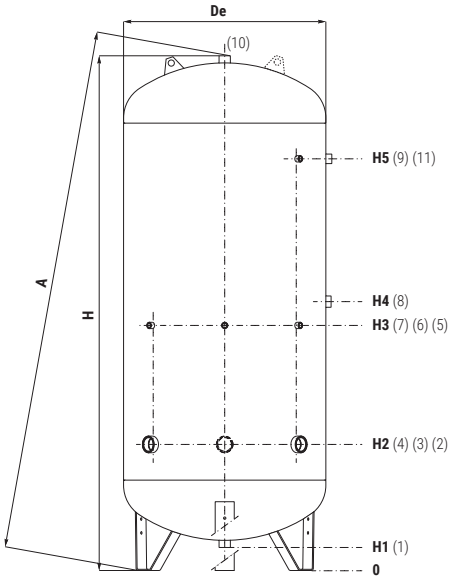

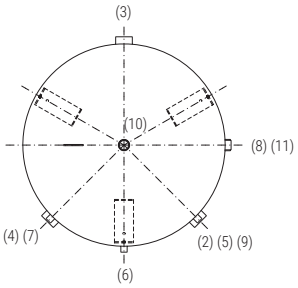

1	Drain
2	Input - use
3	
4	Instrumentation
5	
6	
7	
8	
9	
11	
10	Safety Valve

Model	De	H	A	H1	H2	H3	H4	H5	1-8-10	2-3-4	5-6-7-9	11
	[mm]								Connections F			
100	400	1026	1040	82	341	491	581	766	1" 1/4	1"	1/2"	-
200	450	1417	1430	77	347	547	747	1147	1" 1/4	1"	1/2"	-
300	550	1529	1545	139	434	734	834	1234	1" 1/4	1" 1/4	1/2"	-
500	650	1821	1835	131	451	851	951	1501	1" 1/4	1" 1/2	1/2"	-
1000	850	2163	2180	97	530	1030	1130	1730	1" 1/4	2"	1/2"	1"
1500	1000	2260	2285	100	580	1040	1180	1780	1" 1/4	2"	1/2"	1"
2000	1000	2760	2780	100	580	1080	1430	2280	1" 1/4	2"	1/2"	1"
2500	1200	2628	2655	118	648	1198	1373	2098	1" 1/4	3"	1/2"	1"
3000	1250	2875	2905	116	645	1295	1395	2345	1" 1/4	3"	1/2"	1"
4000	1450	2970	3005	90	710	1330	1530	2380	1" 1/4	3"	1/2"	1"
5000 ø1600	1600	3005	3045	69	717	1337	1537	2387	1" 1/4	3"	1/2"	1"

P.E.D. product designed and produced in conformity to the article 4.3 of directive 2014/68/UE - ErP Ecodesgin directive 2009/125/CE

CORDIVARI

SERBATOIO **ZINCATO Z SC VT**

VERTICAL GALVANIZED TANK FOR PRESSURIZED COLD WATER STORAGE



PRESSURE	TEMPERATURE
Pmax	Tmax
6 bar	0 / +50 °C

Model	SERB. Z SC VT
	Art. Nr.
50	3251161990001
100	3251161990002
200	3251161990003
300	3251161990004
500	3251161990005
750	3251161990006
1000	3251161990007
1500	3251161990008
2000	3251161990009

STOCK AVAILABILITY

UPON REQUEST:
Insulation version with elastolen 20 mm - anti-condensation

APPLICATION AND TECHNICAL DESCRIPTION
Pressurized cold water storage.
Tanks for pressurized water storage are designed for those water systems that need to store pressurized cold water. They cannot work as pressure vessels.
These products are made in galvanized mild steel.

MATERIAL
These tanks are galvanized inside and outside, with immersion in a pool of fused zinc with pureness not below than 99,99% (Uni EN 1179)

WARRANTY
2 years
See general sales conditions and warranty.

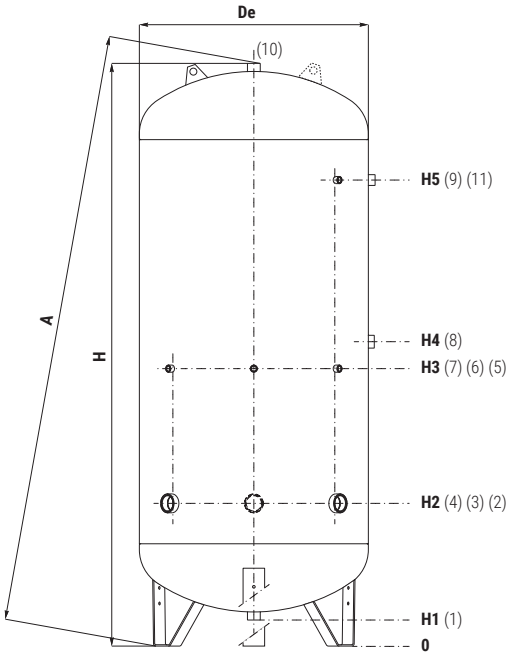

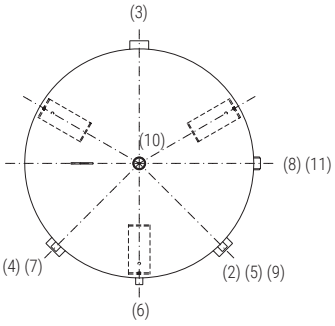

1	Drain
2	Input / Use
3	
4	Instrumentation
5	
6	
7	
8	
9	
10	Safety Valve

Model	De	H	A	H1	H2	H3	H4	H5	1-10	2-3-4	5-6-7-9	8
	[mm]								Connections F			
50	400	602	635	82	237	327	-	-	1"	1"	1/2"	-
100	400	1007	1020	73	327	477	567	752	1" 1/4	1"	1/2"	1" 1/4
200	450	1407	1420	68	337	537	737	1137	1" 1/4	1"	1/2"	1" 1/4
300	550	1519	1530	129	424	724	824	1224	1" 1/4	1" 1/4	1/2"	1" 1/4
500	650	1811	1825	121	441	841	941	1491	1" 1/4	1" 1/2	1/2"	1" 1/4
750	750	2108	2125	108	508	958	1058	1708	1" 1/4	1" 1/2	1/2"	1" 1/4
1000	850	2162	2180	96	529	979	1079	1729	1" 1/2	1" 1/2	1/2"	1" 1/4
1500	950	2473	2495	113	568	1068	1168	2018	2"	2"	1/2"	1" 1/4
2000	1100	2544	2570	95	594	1094	1194	2044	2"	2"	1/2"	1" 1/4

P.E.D. product designed and produced in conformity to the article 4.3 of directive 2014/68/UE - ErP Ecodesgin directive 2009/125/CE

SERBATOIO **ZINCATO Z SC OR**

HORIZONTAL GALVANIZED TANK FOR PRESSURIZED COLD WATER STORAGE

Model	SERB. Z SC OR
	Art. Nr.
100	3251160990001
200	3251160990002
300	3251160990003
500	3251160990004
750	3251160990005
1000	3251160990006
1500	3251160990007
2000	3251160990008

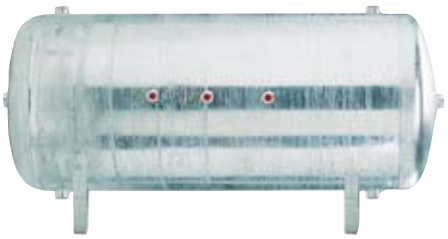

PRESSURE	TEMPERATURE
Pmax	Tmax
6 bar	0 / +50 °C

APPLICATION AND TECHNICAL DESCRIPTION
Pressurized cold water storage.
Tanks for pressurized water storage are designed for those water systems that need to store pressurized cold water. They cannot work as pressure vessels.
These products are made in galvanized mild steel.

MATERIAL
These tanks are galvanized inside and outside, with immersion in a pool of fused zinc with pureness not below than 99,99% (Uni EN 1179)

WARRANTY
2 years
See general sales conditions and warranty.

1	Drain
2	
3	Safety Valve/strumentazione
5	
4	Input - use
6	
7	Instrumentation
8	
9	
10	

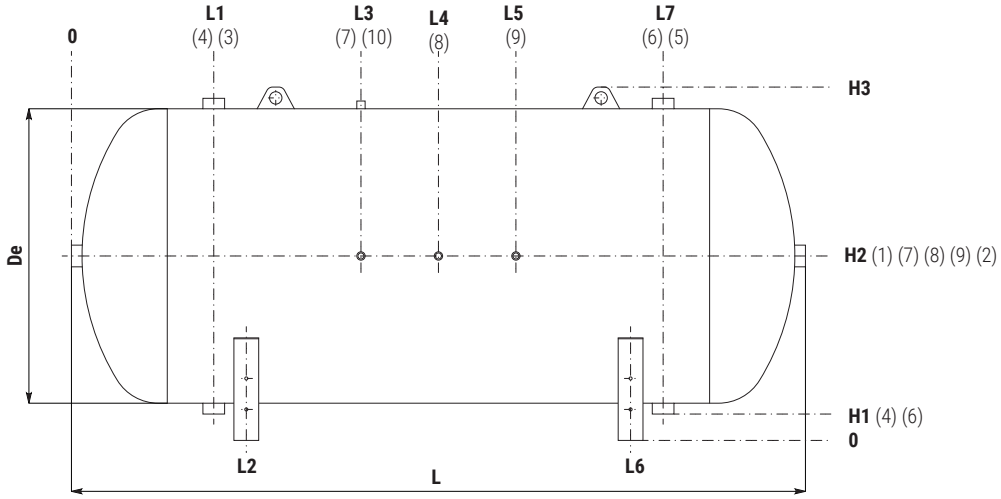

Model	De	L	L1	L2	L3	L4	L5	L6	L7	H1	H2	H3	1-2	3-5	4-6	7-8-9-10
	[mm]												Connections F			
100	400	955	230	300	338	478	618	655	725	69	294	518	1" 1/4	1"	1"	1/2"
200	450	1350	240	340	475	675	875	1010	1110	67	317	568	1" 1/4	1"	1"	1/2"
300	550	1399	285	370	500	700	900	1030	1115	119	424	762	1" 1/4	1" 1/4	1" 1/4	1/2"
500	650	1700	325	420	650	850	1050	1280	1375	115	470	870	1" 1/4	1" 1/2	1" 1/2	1/2"
750	750	2010	355	485	805	1005	1205	1525	1655	108	513	948	1" 1/4	1" 1/2	1" 1/2	1/2"
1000	850	2060	380	510	830	1030	1230	1550	1680	102	557	1042	1" 1/2	1" 1/2	1" 1/2	1/2"
1500	950	2368	460	565	935	1185	1435	1805	1910	85	595	1140	2"	2"	2"	1/2"
2000	1100	2450	500	590	975	1225	1475	1860	1950	72	657	1277	2"	2"	2"	1/2"

P.E.D. product designed and produced in conformity to the article 4.3 of directive 2014/68/UE - ErP Ecodesgin directive 2009/125/CE

VASO A MEMBRANA **VERNICIATO PED VT**

VERTICAL PAINTED EXPANSION VESSEL WITH MEMBRANE (DIRECTIVE 2014/68/UE)



CE

PRESSURE	TEMPERATURE
Pmax	Tmax
8 bar	-10/+99 °C

STOCK AVAILABILITY

Model	VASO MEMB. V PED VT
	Art. Nr.
50	3911162241007
80	3911162241008
100	3911162241003
200	3911162241004
300	3911162241011
500	3911162241012

VASO MEMB. V PED 50 LT (9 unit box)

Model	9 unit box
	Art. Nr.
50	391116224100709

TECHNICAL DESCRIPTION
Vertical V PED expansion vessels with membrane are used for lifted water systems and they represent a pressurised water lung that, if duly dimensioned, reduces pump cycling.
The peculiarity of this product is the physic separation between water and air made by the membrane.

APPLICATION
Perfect to ensure water deliveries to the top floors of the building or to work in case of insufficient water supplied by waterworks, or to stabilize pressure in the domestic water supply by absorbing expansion when the water is heated.

MATERIAL
Painted mild steel.

MEMBRANE
Elastic EPDM membrane suitable for drinking water.

CERTIFICATIONS
V PED VT expansion vessels with membrane are produced in accordance with safety disposal of European Directive 2014/68/UE in terms of pressurized devices.
They are CE labelled with design data:
- pressurized fluid: water+air or nitrogen
- Fluid group: 2
- max. working pressure: 10bar

DOCUMENTS ATTACHED
• CE certification
• User Instructions

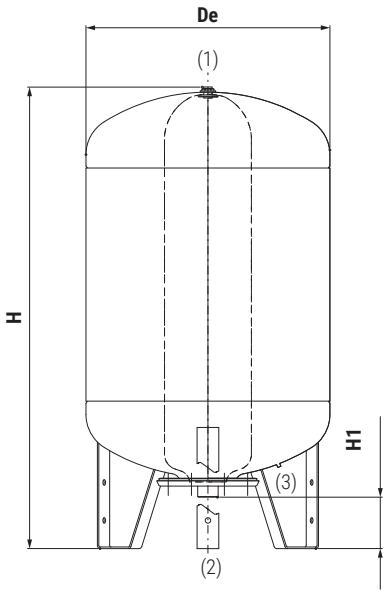

Model	De	H	H1	1	2	3	WORKING CONDITIONS Temp. min/max	Press. max
	[mm]			Connections			[°C]	[bar]
50	400	627	91	Air inlet valve	1" M	-	-10/+99	10
80	450	717	88	Air inlet valve	1" M	-	-10/+99	10
100	450	872	88	1/2" Instrumentation	1" M	Air inlet valve	-10/+99	10
200	550	1187	151	1/2" Instrumentation	1" 1/4 F	Air inlet valve	-10/+99	10

Water in/out

Model	De	H	H1	1	2	3	Used as air cushion pressure vessel Temp. min/max	Press. max	Used as expansion vessel Temp. min/max	Press. max
	[mm]			Connections			[°C]	[bar]	[°C]	[bar]
300	650	1254	150	1/2" Instrumentation	1" 1/4 F	Air inlet valve	-10/+50	10	-10/+99	6
500	750	1511	144	1/2" Instrumentation	1" 1/4 F	Air inlet valve	-10/+50	10	-10/+99	6

Water in/out

VASO A MEMBRANA **VERNICIATO PED 24 LT**

PAINTED EXPANSION VESSEL WITH MEMBRANE (DIRECTIVE 2014/68/UE)



CE

PRESSURE	TEMPERATURE
Pmax	Tmax
8 bar	-10/+99 °C

STOCK AVAILABILITY

VASO MEMB. V PED 24 LT (36 unit box)

Model	36 unit box
	Art. Nr.
24	390119061000136

Model	VASO MEMB. V PED 24 LT
	Art. Nr.
24	3901190610001

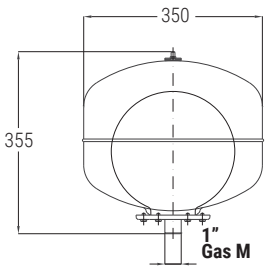

VASO A MEMBRANA **VERNICIATO PED OR**

HORIZONTAL PAINTED EXPANSION VESSEL WITH MEMBRANE (DIRECTIVE 2014/68/UE)

Model	VASO MEMB. V PED OR
	Art. Nr.
50	3911161341007
80	3911161341008
100	3911161341003
200	3911161341004
300	3911161341011
500	3911161341012

STOCK AVAILABILITY

CE



PRESSURE	TEMPERATURE
Pmax	Tmax
8 bar	-10/+99 °C

TECHNICAL DESCRIPTION
Horizontal V PED expansion vessels with membrane are used for lifted water systems and they represent a pressurised water lung that, if duly dimensioned, reduces pump cycling.
The peculiarity of this product is the physic separation between water and air made by the membrane.

APPLICATION
Perfect to ensure water deliveries to the top floors of the building or to work in case of insufficient water supplied by waterworks, or to stabilize pressure in the domestic water supply by absorbing expansion when the water is heated.

MATERIAL
Painted mild steel.

MEMBRANE
Elastic EPDM membrane suitable for drinking water.

CERTIFICATIONS
V PED OR expansion vessels with membrane are produced in accordance with safety disposal of European Directive 2014/68/UE in terms of pressurized devices.
They are CE labelled with design data:
- pressurized fluid: water+air or nitrogen
- Fluid group: 2
- max. working pressure: 10bar

DOCUMENTS ATTACHED
• CE certification
• User Instructions

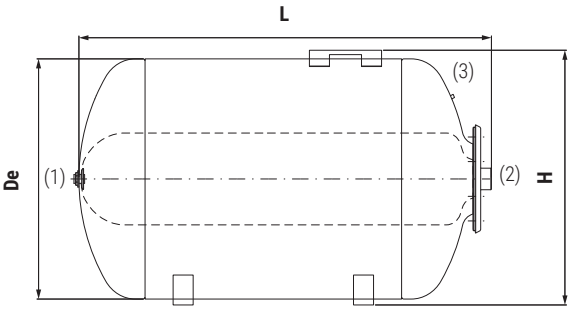

Model	De	H	H1	1	2		3	WORKING CONDITIONS Temp. min/max	Press. max
	[mm]			Connections				[°C]	[bar]
50	400	424	583	Air inlet valve	1" M	Water in/out	-	-10/+99	10
80	450	473	598		1" M		-	-10/+99	10
100	450	473	783	1/2" Instrumentation	1" M		Air inlet valve	-10/+99	10
200	550	583	1066	1/2"	1" 1/4 F			-10/+99	10

Model	De	H	H1	1	2	3	Used as air cushion pressure vessel Temp. min/max	Press. max	Used as expansion vessel Temp. min/max	Press. max
	[mm]			Connections			[°C]	[bar]	[°C]	[bar]
300	650	807	1080	1/2" Instrumentation	1" 1/4 F	Water in/out Air inlet valve	-10/+50	10	-10/+99	6
500	750	900	1350		1" 1/4 F		-10/+50	10	-10/+99	6

MOTOR SUPPORT PLATE

MOTOR SUPPORT PLATE
50/80/100/200 liters

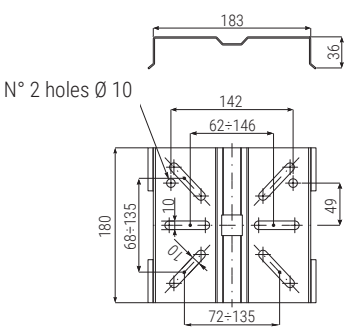

MOTOR SUPPORT PLATE
300/500 liters

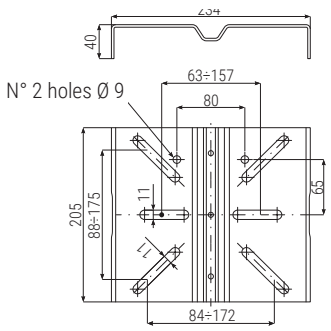

PRESSURIZED WATER TANKS

CORDIVARI

VASO A MEMBRANA **ZINCATO PED VT**

VERTICAL GALVANIZED EXPANSION VESSEL WITH MEMBRANE (DIRECTIVE 2014/68/UE)



CE

STOCK AVAILABILITY

Model	VASO MEMB. Z PED VT
	Art. Nr.
50	3911161991007
80	3911161991008
100	3911161991003
200	3911161991004
300	3911161991011
500	3911161991012

VASO MEMB. Z PED 50 LT (9 unit box)

Model	9 unit box
	Art. Nr.
50	391116199100709

TECHNICAL DESCRIPTION
Vertical Z PED expansion vessels with membrane are used for lifted water systems and they represent a pressurised water lung that, if duly dimensioned, reduces pump cycling.
The peculiarity of this product is the physic separation between water and air made by the membrane.

APPLICATION
Perfect to ensure water deliveries to the top floors of the building or to work in case of insufficient water supplied by waterworks, or to stabilize pressure in the domestic water supply by absorbing expansion when the water is heated.

MATERIAL
Galvanized mild steel.

MEMBRANE
Elastic EPDM foodstuff membrane suitable for drinking water.

CERTIFICATIONS
Z PED VT expansion vessels with membrane are produced in accordance with safety disposal of European Directive 2014/68/UE in terms of pressurized devices.
They are CE labelled with design data:
- pressurized fluid: water+air or nitrogen
- Fluid group: 2
- max. working pressure: 10bar

DOCUMENTS ATTACHED
• CE certification
• User Instructions

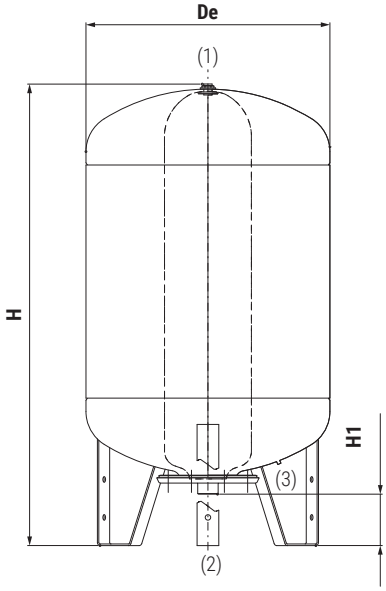

Model	De	H	H1	1	2	3	**WORKING CONDITIONS** Temp. min/max	Press. max
	[mm]			Connections			[°C]	[bar]
50	400	627	91	Air inlet valve	1" M	-	-10/+99	10
80	450	717	88	Air inlet valve	1" M	-	-10/+99	10
100	450	872	88	1/2" Instrumentation	1" M	Air inlet valve	-10/+99	10
200	550	1187	151	1/2" Instrumentation	1" 1/4 F	Air inlet valve	-10/+99	10

Water in/out

Model	De	H	H1	1	2	3	**Used as air cushion pressure vessel** Temp. min/max	Press. max	**Used as expansion vessel** Temp. min/max	Press. max
	[mm]			Connections			[°C]	[bar]	[°C]	[bar]
300	650	1254	150	1/2" Instrumentation	1" 1/4 F	Air inlet valve	-10/+50	10	-10/+99	6
500	750	1511	144	1/2" Instrumentation	1" 1/4 F	Air inlet valve	-10/+50	10	-10/+99	6

Water in/out

VASO A MEMBRANA **ZINCATO PED 24 LT**

GALVANIZED EXPANSION VESSEL WITH MEMBRANE (DIRECTIVE 2014/68/UE)



CE

PRESSURE	TEMPERATURE
Pmax	Tmax
8 bar	-10/+99 °C

STOCK AVAILABILITY

VASO MEMB. Z PED 24 LT (36 unit box)

Model	36 unit box
	Art. Nr.
24	390119060000136

Model	VASO MEMB. Z PED 24 LT
	Art. Nr.
24	3901190600001

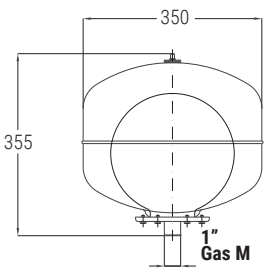

VASO A MEMBRANA **ZINCATO PED OR**

HORIZONTAL GALVANIZED EXPANSION VESSEL WITH MEMBRANE (DIRECTIVE 2014/68/UE)

Model	VASO MEMB. Z PED OR
	Art. Nr.
50	3911160991007
80	3911160991008
100	3911160991003
200	3911160991004
300	3911160991011
500	3911160991012

STOCK AVAILABILITY



TECHNICAL DESCRIPTION
Horizontal Z PED expansion vessels with membrane are used for lifted water systems and they represent a pressurised water lung that, if duly dimensioned, reduces pump cycling.
The peculiarity of this product is the physic separation between water and air made by the membrane.

APPLICATION
Perfect to ensure water deliveries to the top floors of the building or to work in case of insufficient water supplied by waterworks, or to stabilize pressure in the domestic water supply by absorbing expansion when the water is heated.

MATERIAL
Galvanized mild steel.

MEMBRANE
Elastic EPDM foodstuff membrane suitable for drinking water.

CERTIFICATIONS
Z PED OR expansion vessels with membrane are produced in accordance with safety disposal of European Directive 2014/68/UE in terms of pressurized devices.
They are CE labelled with design data:
- pressurized fluid: water+air or nitrogen
- Fluid group: 2
- max. working pressure: 10bar

DOCUMENTS ATTACHED
• CE certification
• User Instructions

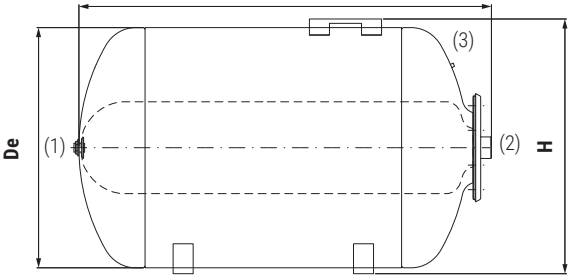

Model	De	H	H1	1	2		3	WORKING CONDITIONS Temp. min/max	Press. max
	[mm]			Connections				[°C]	[bar]
50	400	424	583	Air inlet valve	1" M	Water in/out	-	-10/+99	10
80	450	473	598		1" M		-	-10/+99	10
100	450	473	783	1/2" Instrumentation	1" M		Air inlet valve	-10/+99	10
200	550	583	1066	1/2"	1" 1/4 F			-10/+99	10

Model	De	H	H1	1	2	3	Used as air cushion pressure vessel Temp. min/max	Press. max	Used as expansion vessel Temp. min/max	Press. max
	[mm]			Connections			[°C]	[bar]	[°C]	[bar]
300	650	807	1080	1/2" Instrumentation	1" 1/4 F	Water in/out Air inlet valve	-10/+50	10	-10/+99	6
500	750	900	1350		1" 1/4 F		-10/+50	10	-10/+99	6

MOTOR SUPPORT PLATE

MOTOR SUPPORT PLATE
50/80/100/200 liters

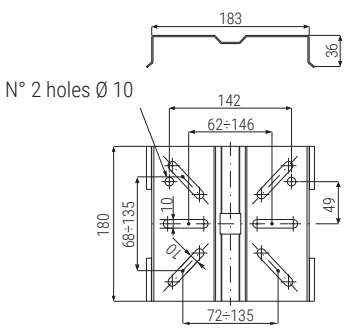

MOTOR SUPPORT PLATE
300/500 liters

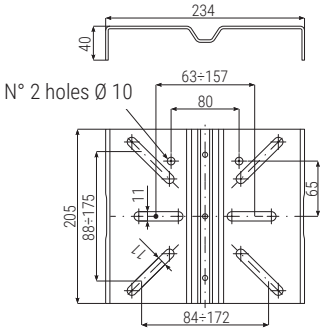

PRESSURIZED WATER TANKS

CORDIVARI

COMPRESSED AIR RECEIVERS

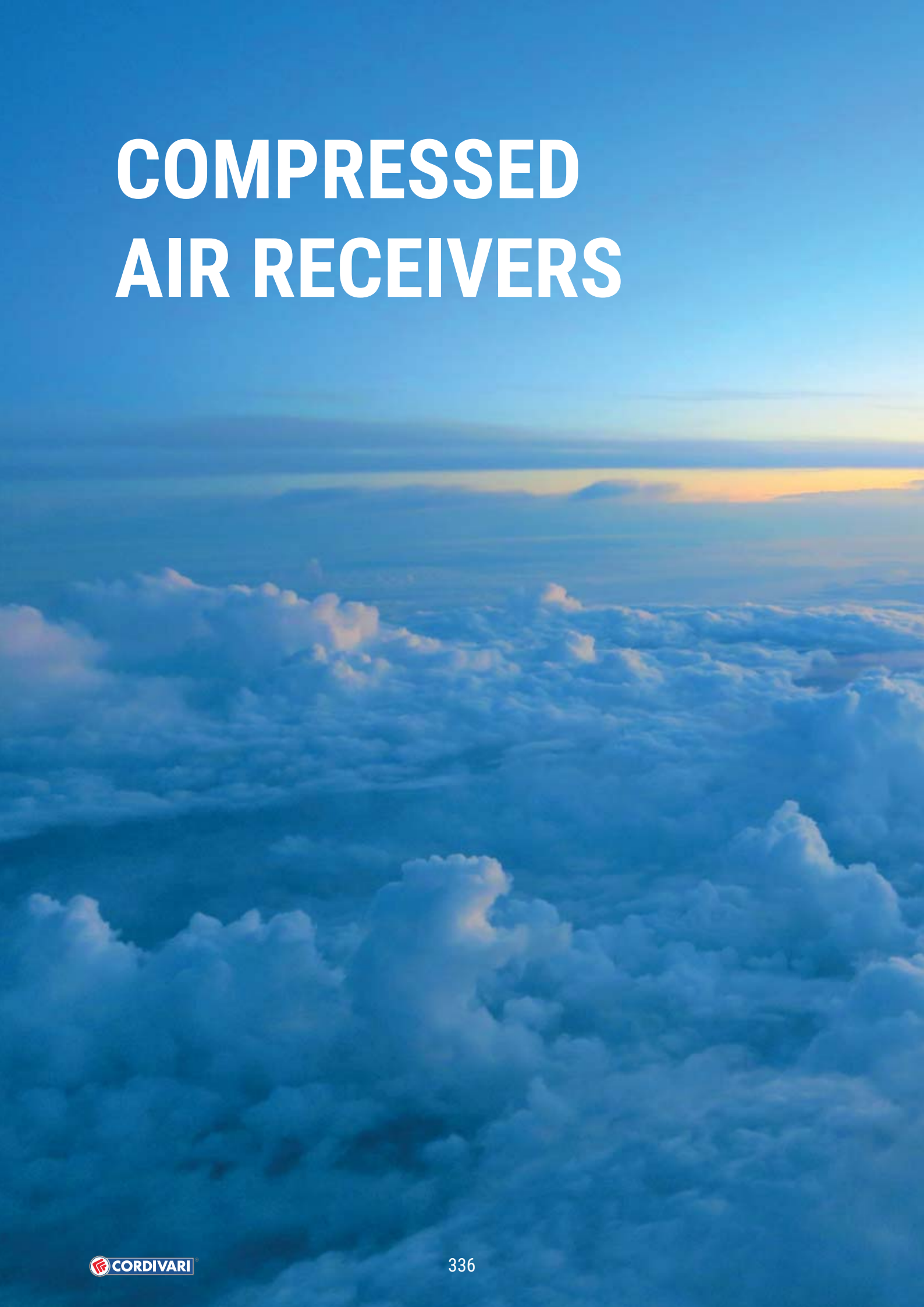



COMPRESSED AIR RECEIVERS **P.E.D.**

TESTED PRESSURIZED TANKS FOR COMPRESSED AIR
CE marked storage tanks for pressurized air in compliance with Directive 2014/68/UE P.E.D.
The range of tested pressurized tanks PED includes all the pressurized storages designed for accumulation of compressed air.
These products are manufactured according the European Directive for pressurized devices (2014/68/UE Pressure Equipment Device) and are designed to contain dangerous fluids at high pressure and/or temperature.



SIMPLE PRESSURE VESSEL DIRECTIVE (SPVD)
The SPVD directive is applicable to pressurized tanks for air or nitrogen, made in steel or aluminum alloy. The working pressure range must be between 0,5 bar and 30 bar. The result of the multiplication of the maximum working pressure and the volume of the tank (PS x V) must be between 50 bar×lt and 10.000 bar×lt. The working temperature range is -50°C to +300°C for steel and max 100°C for aluminum.





THE PRESSURE EQUIPMENT DEVICE (P.E.D.) DIRECTIVE
Any device that overcomes the maximum working pressure limit of **0,5 BAR** is subject to design and manufacture indications according to the directive 2014/68/EU.

This directive establishes an index of hazardousness of the equipment (tanks in our case), determined according to the type of fluid contained, the maximum temperature admissible, the pressure and the capacity of the tank.

Fluids are categorized in 2 groups:
• **GROUP 1**, hazardous fluids (explosive, flammable, easily flammable, highly flammable, oxidizer, toxic and highly toxic)
• **GROUP 2**, not hazardous fluids (all fluids that are not included in **GROUP 1**)

Note: all the Cordivari products involved in the application of the **PED** directive are intended to contain fluids belonging to GROUP 2 (water, steam, compressed air).
The categorization of the equipment in accordance with the level of hazardousness is established in the Annex II of the directive that defines six classes:

Category	Application of the PED directive	CE Marking	Reference
PS ≤ 0,5 and specific exceptions	Not applicable	No	Art. 1.1 e 1.2
PS ≥ 0,5 in conditions of low hazard level	Applicable	No	Art. 4.3
Category I	Applicable	Yes	Table from 1 to 9 Annex II
Category II	Applicable	Yes	
Category III	Applicable	Yes	
Category IV	Applicable	Yes	

ARIA COMPRESSA **SPVS**

COMPRESSED AIR / NITROGEN RECEIVERS (DIRECTIVE 2014/29/CE)



CE

WORKING TEMPERATURE
Tmax
-10/+100 °C

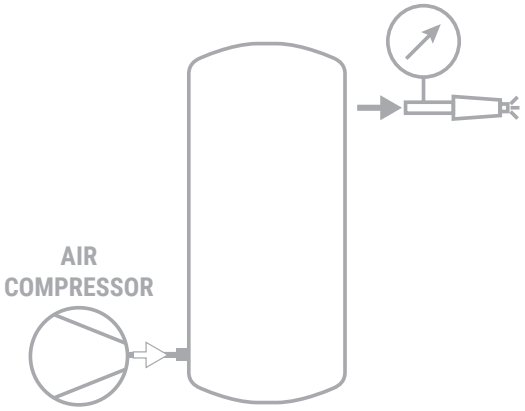

TECHNICAL DESCRIPTION
Compressed air receivers allows to extract more air than the quantity produced by compressor, this without causing an under-pressure in the unit.
Built in mild steel, either painted, galvanized and painted with internal Polywarm® coating according to D.M. nr. 174 dated 06/04/2004.

APPLICATION
Storage and distribution of compressed air.

MATERIAL
• Painted mild steel (standard colour RAL 5002-Blue)
Other colours on demand:
- RAL 5015 - Light Blue
- RAL 3000 - Red
- RAL 1021 - Yellow
• Galvanized mild steel
• Painted mild steel version with internal Polywarm® coating.

DOCUMENTS ATTACHED
• CE certification - User Instructions

CERTIFICATIONS
Compressed air receivers are produced according to European Directive 2014/29/CE for items with a "volume x pressure" minor than 10.000 Bar x Liter. These tanks are marked CE under the monitoring of an external control agency.
• Liquid in pressure: air
• Liquid group: 2
• Maximum working pressure: (See tab)
• Temperature: -10/+100°C

GALVANIZED / PAINTED



STOCK AVAILABILITY



2014/29/CE		VERTICAL COMPRESSED AIR RECEIVER	
Model	Pressure	Galvanized	PAINTED - RAL 5002 BLUE (*)
	[Bar]	Art. Nr.	Art. Nr.
100	11	3053171990001	3053172240001
200		3053171990022	3053172240022
270		3053171990003	3053172240003
500		3053171990004	3053172240004
710		3053171990025	3053172240025
900		3053171990026	3053172240026
270	15	3053171990034	3053172240034
500		3053171990014	3053172240014

(*) Other colours on demand: RAL 5015 Light Blue / RAL 3000 Red / RAL 1021 Yellow

FOOD INTERNAL COATING





2014/29/CE		VERTICAL COMPRESSED AIR RECEIVER
Model	Pressure	PAINTED RAL 5002 BLUE (*) POLYWARM® INTERNAL COATING
	[Bar]	
100	**11**	**on request**
200		
270		
500		
710		
900		
270	**15**	**on request**
500		

(*) Other colours on demand: RAL 5015 Light Blue / RAL 3000 Red / RAL 1021 Yellow

ARIA COMPRESSA **SPVS**

COMPRESSED AIR / NITROGEN RECEIVERS (DIRECTIVE 2014/29/CE)

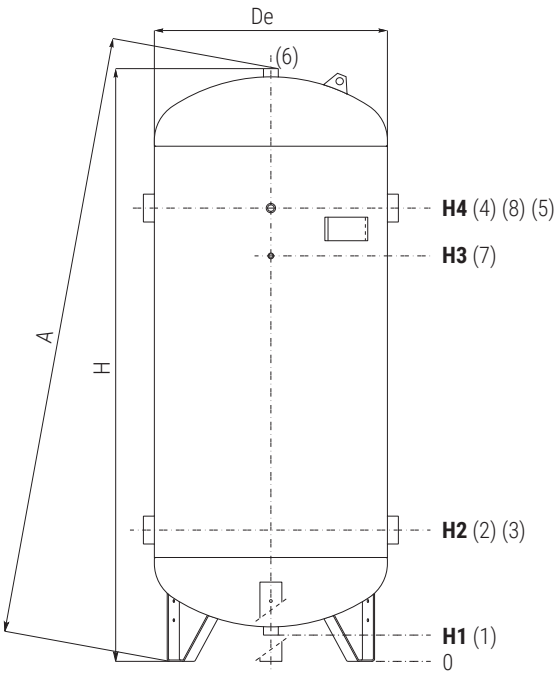

1	Drain
2-3	Air entry
4-5	Air outlet
6	Safety Valve
7-8	Instrumentation

Model	Working Pressure	De	H	A	H1	H2	H3	H4	1-6	2-3-4-5	7	8
	[bar]				[mm]					Connections F		
100	**11**	400	1105	1125	145	380	790	870	2"	1"	3/8"	3/8"
200		450	1470	1490	145	385	1125	1225	2"	1"	3/8"	3/8"
270		500	1760	1780	150	410	1330	1450	2"	1"	3/8"	3/8"
500		650	1850	1870	170	485	1285	1485	2"	2"	3/8"	3/4"
710		790	1900	1930	135	585	1360	1460	2"	2"	3/8"	3/4"
900		790	2130	2160	145	490	1390	1590	2"	2"	3/8"	3/4"
270	**15**	500	1760	1780	150	410	1330	1450	2"	1"	3/8"	3/8"
500		650	1850	1870	170	485	1285	1485	2"	2"	3/8"	3/4"

EXAMPLE OF COMPRESSED AIR RECEIVER PLANT

In compressed air production and distribution systems, tanks are used in production plants for the following functions:
• to store compressed air in order to use it when needed
• to ensure network air flow and constant pressure by limiting interventions to adjust the flow;
• to favour the separation of condensation through the release of the flow coming from the compressor in the bottom of the tank and connecting delivery in the upper.

Furthermore, the tanks are located near uses characterised by highly variable air requirements in order to limit pressure fluctuations along the distribution lines.
Optimum tank volume in a production system depends on the type of compressor, environmental conditions of operation and type of use.
In systems characterised by max operating pressure of 10 bar and flow rates from 1 to 100 Nm^3/min, tank capacity is calculated, as a first approximation, with the following relationship:
V= 0.2 to 0.6 Q
V = theoretical volume of the tank in m^3
Q = intake flow rate from the compressor in m^3/min
0.2 = coefficient for large plants
0.6 = coefficient for small plants

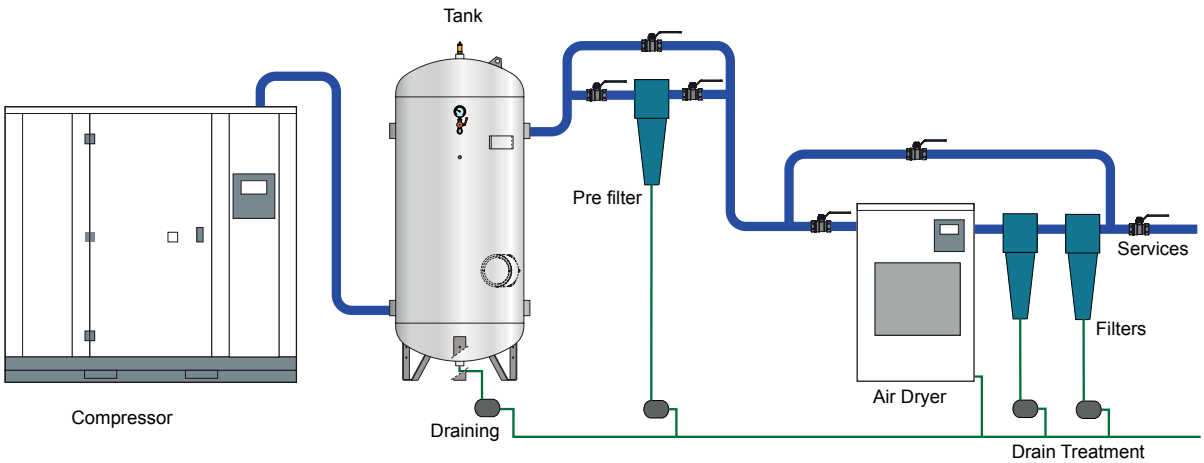

The following schemes are purely illustrative. To realize the installation, always refer to a qualified design engineer.

ARIA COMPRESSA **P.E.D.**

COMPRESSED AIR / NITROGEN RECEIVERS (DIRECTIVE 2014/68/UE - P.E.D.)



CE

WORKING TEMPERATURE
Tmax
-10/+100 °C

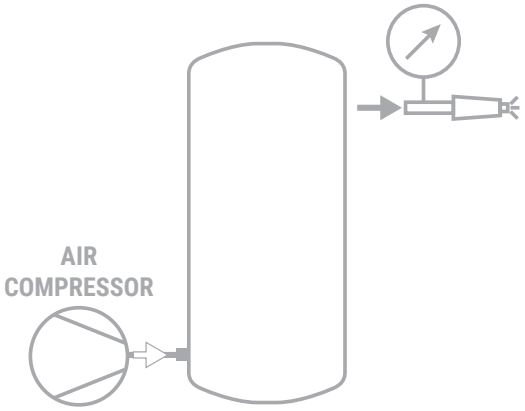

TECHNICAL DESCRIPTION
Compressed air receivers allows to extract more air than the quantity produced by the compressor, this without causing an under-pressure in the unit.
Built in mild steel, either painted, galvanized and painted with internal Polywarm® coating according to D.M. nr. 174 dated 06/04/2004.

APPLICATION
Storage and distribution of compressed air.

MATERIAL
• Painted mild steel (standard colour RAL 5002-Blue)
Other colours on demand:
- RAL 5015 - Light Blue
- RAL 3000 - Red
- RAL 1021 - Yellow
• Galvanized mild steel
• Painted mild steel version with internal Polywarm® coating

CERTIFICATIONS
Compressed air receivers are produced according to European Directive 2014/68/UE – (PED) for items with a "volume x pressure" more than 10.000 Bar x Liter. These tanks are marked CE under the monitoring of an external control agency.
• Liquid in pressure: air / nitrogen
• Liquid group: 2
• Maximum working pressure: (See tab)
• Temperature: 0/+100 °C

DOCUMENTS ATTACHED
• CE certification - User Instructions

GALVANIZED / PAINTED



STOCK AVAILABILITY



2014/68/CE-P.E.D. — VERTICAL COMPRESSED AIR RECEIVER

Model	Pressure [Bar]	Galvanized Art. Nr.	PAINTED - RAL 5002 BLU (*) Art. Nr.
1500	8	3054171990001	3054172240001
2000		3054171990002	3054172240002
3000		3054171990054	3054172240054
4000		3054171990005	3054172240005
5000		3054171990006	3054172240006
8000		3054171990007	/
10000		3054171990008	/
1000	12	3054171990067	3054172240067
1500		3054171990011	3054172240011
2000		3054171990012	3054172240012
2500		3054171990013	3054172240013
3000		3054171990064	3054172240064
4000		3054171990015	3054172240015
5000		3054171990016	3054172240016
8000		3054171990027	/
10000		3054171990028	/
1000	15	3054171990167	3054172240151
1500		3054171990118	3054172240102
2000		3054171990168	3054172240152

(*) Other colours on demand: RAL 5015 Light Blue / RAL 3000 Red / RAL 1021 Yellow

FOOD INTERNAL COATING





2014/68/CE-P.E.D. — VERTICAL COMPRESSED AIR RECEIVER

Model	Pressure [Bar]	PAINTED RAL 5002 BLUE (*) - POLYWARM® INTERNAL COATING
1500	8	**on request**
2000		
3000		
4000		
5000		
1000	12	**on request**
1500		
2000		
2500		
3000		
4000		
5000		
1000	15	**on request**
1500		
2000		

(*) Other colours on demand: RAL 5015 Light Blue / RAL 3000 Red / RAL 1021 Yellow

ARIA COMPRESSA **P.E.D.**

COMPRESSED AIR / NITROGEN RECEIVERS (DIRECTIVE 2014/68/UE - P.E.D.)

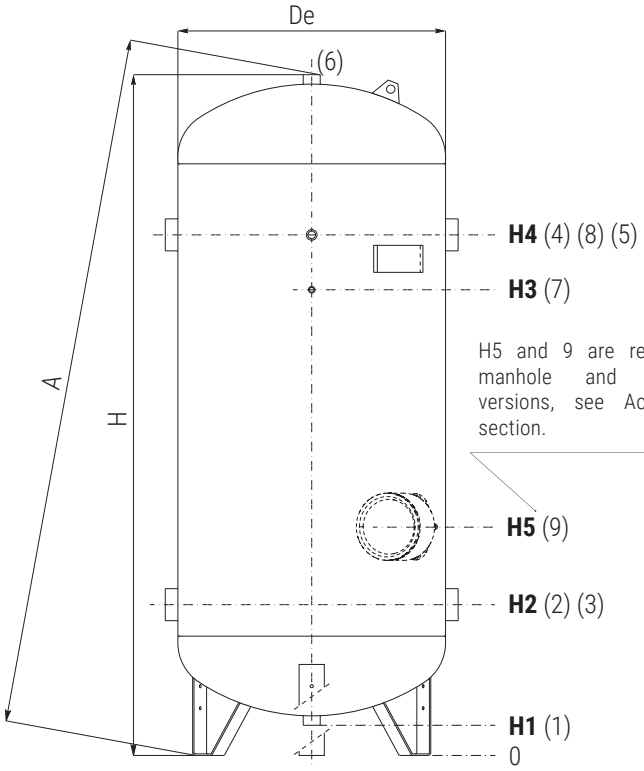

H5 and 9 are referred to manhole and handhole versions, see Accessories section.

1	Drain
2-3	Air inlet
4-5	Air outlet
6	Safety Valve
7-8	Instrumentation
9	Manhole / handhole (on request)

HORIZONTAL VERSION AVAILABLE ON DEMAND - surcharge +12%



Model	Working Pressure	De	H	A	H1	H2	H3	H4	1-6	2-3-4-5	7	8
	[bar]				[mm]					Connections F		
1500	8	950	2470	2510	150	570	1470	1670	2"	2"	3/8"	3/4"
2000		1100	2545	2600	100	595	1495	1695	2"	2"	3/8"	3/4"
3000		1200	3000	3075	140	720	1620	1820	2"	3"	3/8"	3/4"
4000		1450	3000	3100	120	710	1610	1810	2"	3"	3/8"	3/4"
5000		1450	3505	3585	115	710	2100	2300	2"	3"	3/8"	3/4"
8000		1650	4200	4280	220	810	3310	3510	2"	4"	3/8"	3/4"
10000		1650	5200	5270	220	810	4310	4510	2"	4"	3/8"	3/4"
1000	12	790	2430	2450	180	575	1625	1825	2"	2"	3/8"	3/4"
1500		950	2490	2530	115	575	1480	1680	2"	2"	3/8"	3/4"
2000		1100	2545	2600	100	595	1495	1695	2"	2"	3/8"	3/4"
2500		1200	2660	2760	145	680	1580	1780	2"	3"	3/8"	3/4"
3000		1200	3000	3075	140	720	1620	1820	2"	3"	3/8"	3/4"
4000		1450	3000	3100	120	710	1610	1810	2"	3"	3/8"	3/4"
5000		1450	3505	3585	115	710	2100	2300	2"	3"	3/8"	3/4"
8000		1650	4200	4280	220	810	3310	3510	2"	4"	3/8"	3/4"
10000		1650	5200	5270	220	810	4310	4510	2"	4"	3/8"	3/4"
1000	15	790	2430	2450	180	575	1625	1825	2"	2"	3/8"	3/4"
1500		950	2490	2530	115	575	1480	1680	2"	2"	3/8"	3/4"
2000		1100	2545	2600	100	595	1495	1695	2"	2"	3/8"	3/4"

EXAMPLE OF COMPRESSED AIR RECEIVER PLANT

In compressed air production and distribution systems, tanks are used in production plants for the following functions:
- to store compressed air in order to use it when needed
- to ensure network air flow and constant pressure by limiting interventions to adjust the flow;
- to favour the separation of condensation through the release of the flow coming from the compressor in the bottom of the tank and connecting delivery in the upper.

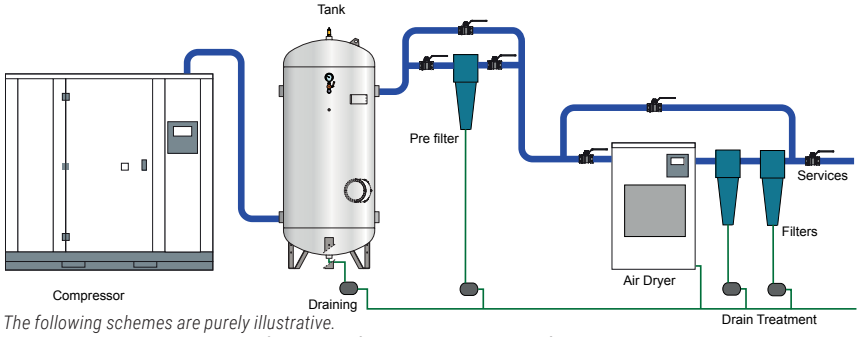

The following schemes are purely illustrative.
To realize the installation, always refer to a qualified design engineer.qualified design engineer.

Furthermore, the tanks are located near uses characterised by highly variable air requirements in order to limit pressure fluctuations along the distribution lines.
Optimum tank volume in a production system depends on the type of compressor, environmental conditions of operation and type of use.
In systems characterised by max operating pressure of 10 bar and flow rates from 1 to 100 Nm^3/min, tank capacity is calculated, as a first approximation, with the following relationship:
V= 0.2 to 0.6 Q
V = theoretical volume of the tank in m^3
Q = intake flow rate from the compressor in m^3/min
0.2 = coefficient for large plants
0.6 = coefficient for small plants



ACCESSORIES

ACCESSORIES AND SPARE PARTS
CALORIFIERS - MULTYFUEL ENERGY CYLINDERS

LOWER HEAT EXCHANGER FOR EXTRA 1,2 AND 3 VT CALORIFIERS

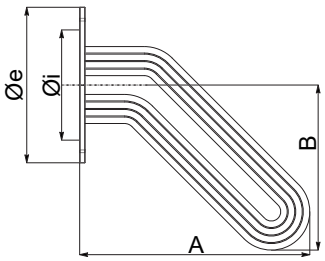



The Antilegionella® coil, which is the heat exchanger with tubes bent to the bottom is an efficient innovation installed as a standard on every Cordivari's Extra calorifiers. This reduces the diffusion of legionellosis bacterium.
Advantages:
- The Antilegionella® curved heat exchanger can heat the complete quantity of water in an homogenous way. Even in the bottom area of the boiler which is impossible with traditional heat exchanger.
- Possibility of using lower capacity boilers for the same quantity of hot water needed.

Kit including: exchanger, gaskets, bolts and insulated bushes.
MAX WORKING PRESSURE: 12 bar
MAX WORKING TEMPERATURE: 110 °C

STAINLESS STEEL 316L
ANTILEGIONELLA® HEAT EXCHANGER WITH SILICONE GASKET

Heat exchanger surface	Øi / Øe	A	B	Art. Nr.	AVAILABLE FOR
[m²]		[mm]			
0,5	Øi220/Øe300	350	240	5221000010100	• EXTRA1 WXC 200 - EXTRA1 XXC 200 • EXTRA2 WXC 200 - EXTRA2 XXC 200
0,75	Øi220/Øe300	350	240	5221000010101	• EXTRA1 WXC 300 - EXTRA1 XXC 300 • EXTRA2 WXC 300 - EXTRA2 XXC 300
1	Øi220/Øe300	371	261	5221000010102	• EXTRA1 WXC 500 - EXTRA1 XXC 500
1,5	Øi220/Øe300	561	311	5221000010113	• EXTRA2 WXC 500 - EXTRA2 XXC 500
1,5	Øi300/Øe380	496	336	5221000010103	• EXTRA1 WXC 800 - EXTRA 1 XXC 800
2	Øi300/Øe380	496	336	5221000010104	• EXTRA1 WXC 1000 - EXTRA1 XXC 1000 • EXTRA2 WXC 800 -EXTRA 2 XXC 800
3	Øi300/Øe380	607	452	5221000010105	• EXTRA1 WXC 1500 - EXTRA1 XXC 1500 • EXTRA 1 WXC 1500 COMPACT • EXTRA2 WXC 1000 - EXTRA2 WXC 1500 EXTRA2 XXC 1000 - EXTRA2 XXC 1500 • EXTRA3 WXC 1500
4	Øi350/Øe430	636	457	5221000010106	• EXTRA1 WXC 2000 - EXTRA1 XXC 2000 • EXTRA1 WXC 2000 COMPACT • EXTRA2 WXC 2000 - EXTRA2 XXC 2000 • EXTRA3 WXC 2000
5	Øi350/Øe430	678	498	5221000010107	• EXTRA1 WXC 2500 - EXTRA1 XXC 2500 • EXTRA1 WXC 2500 COMPACT • EXTRA2 WXC 2500 - EXTRA2 XXC 2500
6	Øi350/Øe430	828	585	5221000010123	• EXTRA1 WXC 3000 - EXTRA1 XXC 3000 • EXTRA1 WXC 3000 COMPACT • EXTRA2 WXC 3000 - EXTRA 3 WXC 3000 • EXTRA2 XXC 3000
8	Øi350/Øe430	1250	598	5221000010108	• EXTRA1 WXC 4000 - EXTRA1 XXC 4000 • EXTRA1 WXC 4000 COMPACT • EXTRA2 WXC 4000 - EXTRA2 XXC 4000
10	Øi350/Øe430	1550	538	5221000010109	• EXTRA1 WXC 5000 - EXTRA1 XXC 5000 • EXTRA2 WXC 5000 - EXTRA2 XXC 5000 • EXTRA3 WXC 5000

ACCESSORIES AND SPARE PARTS
CALORIFIERS - MULTYFUEL ENERGY CYLINDERS

MIDDLE AND UPPER HEAT EXCHANGERS FOR CALORIFIERS EXTRA 2 AND 3 VT AND EXTRA 1 OR

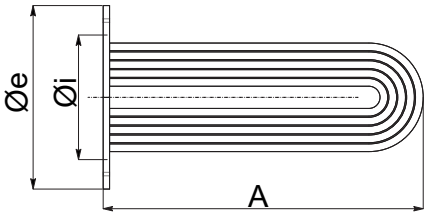



Kit including: exchanger, gaskets, bolts and insulated bushes.
MAX WORKING PRESSURE: 12 bar
MAX WORKING TEMPERATURE: 110 °C

STRAIGHT EXCHANGER
STAINLESS STEEL 316L WITH SILICONE GASKET

Heat exchanger surface	Øi / Øe	A	Art. Nr.	AVAILABLE FOR		
[m²]	[mm]					
0,5	Øi220/Øe300	445	5221000010074	• EXTRA1 WXC OR 200 EXTRA1 XXC OR 200	• EXTRA2 WXC 200 EXTRA2 XXC 200	---
0,75	Øi220/Øe300	445	5221000010075	• EXTRA1 WXC OR 300 EXTRA1 XXC OR 300	• EXTRA2 WXC 300 EXTRA2 XXC 300	---
1	Øi220/Øe300	475	5221000010076	• EXTRA1 WXC OR 500 EXTRA1 XXC OR 500	---	---
1,5	Øi220/Øe300	690	5221000010077	---	• EXTRA2 WXC 500 EXTRA2 XXC 500	---
1,5	Øi300/Øe380	600	5221000010078	• EXTRA1 WXC OR 800 EXTRA1 XXC OR 800	---	• EXTRA3 WXC 1500
2	Øi300/Øe380	560	5221000010079	• EXTRA1 WXC OR 1000 EXTRA1 XXC OR 1000	• EXTRA2 WXC 800 EXTRA2 WXC 1000 EXTRA2 XXC 800-1000	• EXTRA3 WXC 2000
3	Øi300/Øe380	720	5221000010080	• EXTRA1 WXC OR 1500 EXTRA1 XXC OR 1500	• EXTRA2 WXC 1500 EXTRA2 XXC 1500 • EXTRA3 WXC 1500	• EXTRA3 WXC 3000
4	Øi350/Øe430	750	5221000010081	• EXTRA1 WXC OR 2000 EXTRA1 XXC OR 2000	• EXTRA2 WXC 2000 EXTRA2 XXC 2000 • EXTRA3 WXC 2000	---
5	Øi350/Øe430	780	5221000010082	• EXTRA1 WXC OR 3000 EXTRA1 XXC OR 3000	EXTRA2 WXC 2500 EXTRA2 XXC 2500	• EXTRA3 WXC 5000
6	Øi350/Øe430	890	5221000010122	---	EXTRA2 WXC 3000 EXTRA2 XXC 3000	---
8	Øi350/Øe430	1250	5221000010083	• EXTRA1 WXC OR 4000 EXTRA1 XXC OR 4000	EXTRA2 WXC 4000 EXTRA2 XXC 4000 EXTRA3 WXC 4000	---
10	Øi350/Øe430	1510	5221000010084	• EXTRA1 WXC OR 5000 EXTRA1 XXC OR 5000	EXTRA2 WXC 5000 EXTRA2 XXC 5000 EXTRA3 WXC 5000	---

COMPATIBILITY TABLES VASI STORAGE/HEAT EXCHANGERS

SEE PAGE 68



ACCESSORIES AND SPARE PARTS
CALORIFIERS - MULTYFUEL ENERGY CYLINDERS

COPPER FINNED AND TINNED HEAT EXCHANGERS (AVAILABLE ON EXTRA PLUS - INERTIAL TANKS)

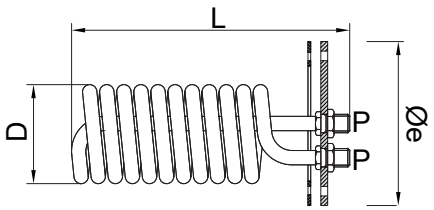

Including flangeplate, gaskets, bolts and user manual.
MAX WORKING PRESSURE: 12 bar
MAX WORKING TEMPERATURE: 110 °C

Including flangeplate, gaskets, bolts and user manual.

HEAT EXCHANGER

Heat exchanger surface	Dif/Df flange	Øi	L	P	Capacity	Art. Nr.	LOWER				MIDDLE			UPPER
							EXTRA 1 PLUS - EXTRA 2 PLUS - EXTRA 3 PLUS				EXTRA 2 PLUS - EXTRA 3 PLUS			EXTRA 3 PLUS
[m²]	[mm]						AVAILABLE ON:							
0,76	Øi220/Øf300	142	400	1"	0,6	5221000061003	200	//	//	//	200	300	500	500
0,94	Øi220/Øf300	142	410	1"	0,54	5221000061002	300	//	//	//	//	//	//	//
1,58	Øi220/Øf300	170	440	1"	1,21	5221000061004	500	//	//	//	//	//	//	//
0,94	Øi300/Øf380	142	410	1"	0,54	5221000061011	//	//	//	//	800	//	//	1000
1,58	Øi300/Øf380	170	440	1"	1,21	5221000061012	//	//	//	//	1000	//	//	1500
2,63	Øi300/Øf380	190	570	1"	2,07	5221000061006	800	//	//	//	1500	//	//	2000
3,17	Øi300/Øf380	190	665	1"	2,51	5221000061007	1000	//	//	//	//	//	//	3000
4,54	Øi300/Øf380	190	750	1"1/4	3,6	5221000061008	1500	//	//	//	//	//	//	//
3,17	Øi350/Øf430	190	665	1"	2,51	5221000061013	//	//	//	//	2000	//	//	//
4,54	Øi350/Øf430	190	750	1"1/4	3,6	5221000061014	//	//	//	//	2500	//	//	//
5,26	Øi350/Øf430	190	850	1"1/4	4,14	5221000061009	2000	//	//	//	3000	//	//	5000
6,34	Øi350/Øf430	190	980	1"1/4	5,1	5221000061010	2500	3000	4000	5000	4000	5000	//	//

COPPER FINNED AND TINNED HEAT EXCHANGERS (SPARE PART WITH Ø 300 MM FLANGE)

Including flangeplate, gaskets, bolts and user manual.
MAX WORKING PRESSURE: 12 bar
MAX WORKING TEMPERATURE: 110 °C

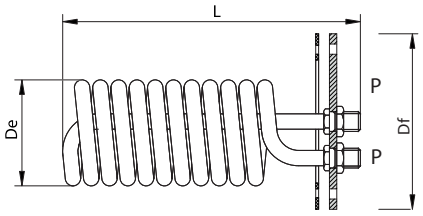

Heat exchanger surface	Copper finned and tinned heat exchangers	De	Flange plate diameter Df	L	P	Capacity
[m²]	Art. Nr.		[mm]		[]	[lt]
2,27	5221000061021	170	300	570	1"	1,79
2,63	5221000061022	190	300	570	1"	2,07
3,17	5221000061023	190	300	665	1"	2,51
4,54	5221000061024	190	300	750	1" 1/4	3,60
5,26	5221000061025	190	300	850	1" 1/4	4,14
6,34	5221000061026	190	300	980	1" 1/4	5,10

Suitable for products produced before 05/2019

ADDITIONAL COPPER FINNED COIL (AVAILABLE ON BOLLY® ST 1 - 2, MODELS 800 AND 1000)

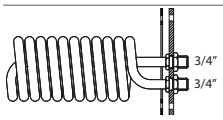

Art. Nr.	Description
5221000910001	Sup.=0,94m² - De=145 mm - L=370 mm

Available on Bolly® ST 1 - 2 models 800 and 1000. Including flangeplate, gaskets, bolts and user manual.

MAX WORKING PRESSURE: 12 bar
MAX WORKING TEMPERATURE: 110 °C

ACCESSORIES AND SPARE PARTS
CALORIFIERS - MULTYFUEL ENERGY CYLINDERS

COMPATIBLE ELECTRIC KITS

Following charts indicate the electrical kits compatible with Cordivari calorifiers range. Operating time expressed in minutes and DHW volume are shown below.

ELECTRIC IMMERSION HEATERS

Mod.	Heated volume by electric immersion heater [lt]	MONOPHASE 1,5 kW	MONOPHASE 2 kW	MONOPHASE 3 kW	THREEPHASE 4 kW	THREEPHASE 5 kW	THREEPHASE 6 kW	THREEPHASE 9 kW	THREEPHASE 12 kW
		5240000000051	5240000000052	5240000000053	5240000000047	5240000000048	5240000000049	5240000000050	5240000000031
		Ignition time from 10 °C to 45 °C with electric immersion heaters [min]							
200	49	87	65	44	//	//	//	//	//
300	76	136	102	68	//	//	//	//	//
500	127	228	171	114	//	//	//	//	//
800	178	318	239	159	//	//	//	//	//
1000	243	436	327	218	163	131	109	73	54
1500	288	516	387	258	194	155	129	86	65
2000	443	793	595	396	297	238	198	132	99
2500	577	1033	775	517	387	310	258	172	129
3000	577	1033	775	517	387	310	258	172	129
4000	797	1428	1071	714	535	428	357	238	178
5000	1040	1864	1398	932	699	559	466	311	233

COMPATIBLE WITH:



EXTRA® 1 · EXTRA® 2 · EXTRA® 1 PLUS · EXTRA® 2 PLUS · EXTRA® 1 INOX · EXTRA® 2 INOX · VASO INERZIALE · VASO INERZIALE INOX · PIASTRATERM® SLB · VASO STORAGE 1 · VASO STORAGE 2 · VASO STORAGE 3

ELECTRIC IMMERSION HEATERS

Mod.	Heated volume by electric immersion heater [lt]	MONOPHASE 1,5 kW	MONOPHASE 2 kW	MONOPHASE 3 kW	THREEPHASE 4 kW	THREEPHASE 5 kW	THREEPHASE 6 kW	THREEPHASE 9 kW	THREEPHASE 12 kW
		5240000000051	5240000000052	5240000000053	5240000000047	5240000000048	5240000000049	5240000000050	5240000000031
		Ignition time from 10 °C to 45 °C with electric immersion heaters [min]							
1500	443	793	595	396	297	238	198	132	99
2000	577	1033	775	517	387	310	258	172	129
2500	797	1428	1071	714	535	428	357	238	178
3000	874	1565	1173	782	587	469	391	261	196
4000	924	1655	1241	828	621	497	414	276	207

COMPATIBLE WITH:



EXTRA® 1 COMPACT · EXTRA® 2 COMPACT · VASO INERZIALE COMPACT · VASO STORAGE 1 COMPACT · VASO STORAGE 2 COMPACT

ELECTRIC IMMERSION HEATERS

Mod.	Heated volume by electric immersion heater [lt]	MONOPHASE 1,5 kW	MONOPHASE 2 kW	MONOPHASE 3 kW	MONOPHASE 4 kW	THREEPHASE 5 kW	THREEPHASE 6 kW	THREEPHASE 9 kW	THREEPHASE 12 kW
		5240000000051	5240000000052	5240000000053	5240000000047	5240000000048	5240000000049	5240000000050	5240000000031
		Ignition time from 10 °C to 45 °C with electric immersion heaters [min]							
150	42	76	57	38	//	//	//	//	//
200	72	128	96	64	//	//	//	//	//
300	113	202	152	101	//	//	//	//	//
400	167	299	225	150	//	//	//	//	//
500	184	329	247	165	//	//	//	//	//
800	313	560	420	280	//	//	//	//	//
1000	383	686	514	343	257	206	171	114	86
1300	500	896	672	448	336	269	224	149	112
1500	557	998	749	499	374	299	250	166	125
2000	835	1495	1121	747	560	448	374	249	187

COMPATIBLE WITH:



BOLLY® 1 ST · BOLLY® 2 ST · BOLLY® 1 ST INOX · BOLLY® 2 ST INOX · BOLLY® 1 SLIM CL. A · BOLLY® 2 SLIM CL. A

ACCESSORIES AND SPARE PARTS
CALORIFIERS - MULTYFUEL ENERGY CYLINDERS

COMPATIBLE ELECTRIC KITS

Following charts indicate the electrical kits compatible with Cordivari calorifiers range. Operating time expressed in minutes and DHW volume are shown below.

ELECTRIC IMMERSION HEATERS

Mod.	Heated volume by electric immersion heater [lt]	MONOPHASE 1,5 kW 5240000000051	MONOPHASE 2 kW 5240000000052	MONOPHASE 3 kW 5240000000053
		Ignition time from 10 °C to 45 °C with electric immersion heaters [min]		
150	42	76	57	38
200	44	78	59	39
300	80	143	107	71
400	126	226	170	113
500	185	331	248	165
800	243	395	296	198
1000	351	572	429	286

COMPATIBLE WITH:



BOLLY® 1 AP



BOLLY® 1 BC

ELECTRIC IMMERSION HEATERS

Mod.	Heated volume by electric immersion heater [lt]	MONOPHASE 1,5 kW 5240000000051	MONOPHASE 2 kW 5240000000052	MONOPHASE 3 kW 5240000000053
		Ignition time from 10 °C to 45 °C with electric immersion heaters [min]		
200	54	88	60	44
300	105	188	141	94
500	172	307	230	154
800	263	428	321	214
1000	379	618	463	308

COMPATIBLE WITH:



BOLLY® 2 AP



BOLLY® 2 BC

ELECTRIC IMMERSION HEATERS

Mod.	Heated volume by electric immersion heater [lt]	MONOPHASE 1,5 kW 5240000000051	MONOPHASE 2 kW 5240000000052	MONOPHASE 3 kW 5240000000053
		Ignition time from 10 °C to 45 °C with electric immersion heaters [min]		
200	166	298	223	149
300	245	439	329	219
500	424	759	569	380
800	607	989	742	495
1000	783	1275	956	638

COMPATIBLE WITH:



BOLLY® 1 XL

ELECTRIC IMMERSION HEATERS

Mod.	Heated volume by electric immersion heater [lt]	MONOPHASE 1,5 kW 5240000000051	MONOPHASE 2 kW 5240000000052	MONOPHASE 3 kW 5240000000053
		Ignition time from 10 °C to 45 °C with electric immersion heaters [min]		
200	67	120	90	60
300	72	129	97	64
500	114	204	153	102
800	232	416	312	208
1000	346	620	465	310

COMPATIBLE WITH:



BOLLY® 1
XL INOX XB

ELECTRIC IMMERSION HEATERS

Mod.	Heated volume by electric immersion heater [lt]	MONOPHASE 1,5 kW 5240000000051	MONOPHASE 2 kW 5240000000052	MONOPHASE 3 kW 5240000000053
		Ignition time from 10 °C to 45 °C with electric immersion heaters [min]		
200	127	207	155	104
300	173	281	211	140
500	313	509	382	255

COMPATIBLE WITH:



BOLLY® 2 XL

ELECTRIC IMMERSION HEATERS

Mod.	Heated volume by electric immersion heater [lt]	MONOPHASE 1,5 kW 5240000000051	MONOPHASE 2 kW 5240000000052	MONOPHASE 3 kW 5240000000053
		Ignition time from 10 °C to 45 °C with electric immersion heaters [min]		
200	98	176	132	88
300	169	274	206	137
500	305	496	372	248
800	420	752	564	376
1000	534	956	717	478

COMPATIBLE WITH:



BOLLY® 2
XL INOX XB

ELECTRIC IMMERSION HEATERS

Mod.	Heated volume by electric immersion heater [lt]	MONOPHASE 1,5 kW 5240000000051	MONOPHASE 2 kW 5240000000052	MONOPHASE 3 kW 5240000000053
		Ignition time from 10 °C to 45 °C with electric immersion heaters [min]		
200	166	298	223	149
300	245	439	329	219

COMPATIBLE WITH:



BOLLY® HY

ACCESSORIES AND SPARE PARTS
CALORIFIERS - MULTYFUEL ENERGY CYLINDERS

ELECTRIC IMMERSION HEATERS KIT

ELECTRIC IMMERSION HEATERS can be used as integration on calorifiers and tanks, stainless steel heaters, protection class min IP44, supplied with thermostat, safety thermostat reset user and 2 mt of electrical cable wired and without plug. Temperature range: 30 °C / 70 °C

1,5 - 3 Kw

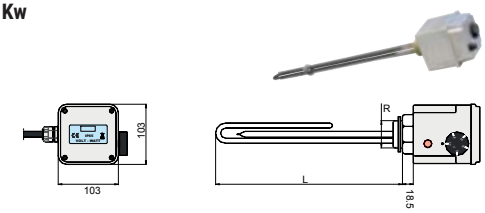

Art. Nr.	Tension	Output	Length L	Connection R
	Volt	[Kw]	[mm]	M
5240000000051	220 V MONOPHASE	1,5	320	1"1/2
5240000000052		2	320	
5240000000053		3	320	

ELECTRIC IMMERSION HEATERS can be used as integration on calorifiers and tanks, heating elements compliant for use with drinking water, protection class min IP44 supplied with thermostat, safety thermostat manual reset and 2 mt of electrical cable wired and without plug.

4-9 Kw

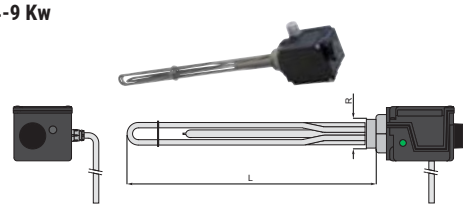

Art. Nr.	Tension	Output	Length L	Connection R
	[Volt]	[Kw]	[mm]	M
5240000000047	400 V THREEPHASE	4	415	1"1/2
5240000000048		5	500	
5240000000049		6	600	
5240000000050		9	750	

12 Kw

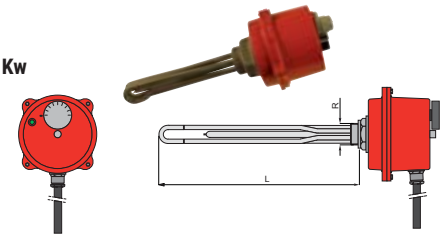

Art. Nr.	Tension	Output	Length L	Connection R
	[Volt]	[Kw]	[mm]	M
5240000000031	400 V THREEPHASE	12	750	2"

ELECTRIC IMMERSION HEATERS AVAILABLE ON INTERKA MODELS

ELECTRIC IMMERSION HEATERS can be used as integration on calorifiers and tanks, cooper heaters, protection class IP45 supplied with thermostat, safety thermostat reset user and 2 mt of electrical cable wired and without plug. Specifical for Interka model.

1,5 Kw

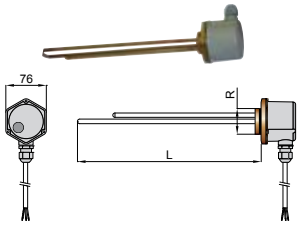

Art. Nr.	Tension	Output	Length L	Raccordo R
	Volt	[Kw]	[mm]	M
5240000000042	220 V MONOPHASE	1,5	340	1"1/4

ACCESSORIES AND SPARE PARTS
CALORIFIERS - MULTYFUEL ENERGY CYLINDERS

EXCHANGER HEAD FOR EXTRA 1,2,3 CALORIFIERS AND VASI STORAGE



Art. Nr.	Connection	Ø outer [mm]
5206000000001	1"	300
5206000000002	2"	380
5206000000003	2"	430

Comprensiva di 2 guarnizioni, boccole e bulloni
Versione per scambiatori a fascio tubiero

The Flange plate includes 2 sleeve collars for the connection to the operating system. This allows the circulation of the liquid within the heat exchanger's serpentine doing the real separation between the incoming liquid and the outgoing one. The flange plate is in mild steel. Blind flange for accumulation tank in Polywarm® available also with 1 connection. Including: gaskets, bolts and bushes

FLANGE PLATE FOR D.H.W. STORAGE TANKS (VASI STORAGE)



Art. Nr.	Connection	Ø outer [mm]
5206000000051	1"1/2	300
5206000000054	1"1/2	380
5206000000056	1"1/2	430
5206000000053	2"	430

Includes 1 gasket and bolts
1 connection for electric immersion heater (available on storage tanks)



Art. Nr.	Ø outer [mm]
5206000000101	300
5206000000102	380
5206000000103	430

Includes 1 gasket and bolts
Blind flange available (available on storage tanks)

GASKET FOR FLANGE PLATE

PAIR OF GASKET FOR EXTRA CALORIFIERS- includes bolts and bushes.



Art. Nr.	Ø outer [mm]
5021220401001	300
5021220401002	380
5021220401003	430

One gasket with crosspiece and one without.
Silicone gaskets suitable for water intended for human consumption (tested according to 98/83/CE), max temperature up to 200°C.

PAIR OF GASKET FOR EXTRA VAPORE CALORIFIERS- includes bolts and bushes.



Art. Nr.	Ø outer [mm]
5021220460111	300
5021220460112	380
5021220460113	430

One gasket with crosspiece and one without.
Made in material for max. temperature up to 192°C

PAIR OF GASKET FOR EXTRA PLUS CALORIFIERS - VASI STORAGE



Art. Nr.	Units box:	Ø outer [mm]
5021220401013	5 pcs	300
5021220401016	10 pcs	380
5021220401015	10 pcs	430

One gasket with crosspiece and one without.
Silicone gaskets suitable for water intended for human consumption (tested according to 98/83/CE), max temperature up to 200°C.

PAIR OF GASKET FOR BOLLY® POLYWARM® (150÷500) / COMBI



Art. Nr.	Units box:	Ø outer [mm]
5021220401011	5 pcs	190

One gasket with crosspiece and one without.
Silicone gaskets suitable for water intended for human consumption (tested according to 98/83/CE), max temperature up to 200°C.

PAIR OF GASKET FOR BOLLY® POLYWARM® (800 - 1000) / VASI INERZIALI INOX AND POLYWARM® > 1000



Art. Nr.	Units box:	Ø outer [mm]
5021220401012	5 pcs	240

One gasket with crosspiece and one without.
Silicone gaskets suitable for water intended for human consumption (tested according to 98/83/CE), max temperature up to 200°C.

FLANGE PLATE WITH CONNECTION FOR ELECTRIC AVAILABLE ON BOLLY® 1 - 2 -VASO INERZIALE

Electric immersion heater flange plate - Kit includes bolts, bushes and user manual.



Art. Nr.	POLYWARM® VERSION
5212000910017	1" 1/2 Flange ø 190 mm-with connection for electrical immersion + flange plate (Bolly® 150÷500)
5212000910018	2" Flange ø 190 mm-with connection for electrical immersion + flange plate (Bolly® 150÷500)
5212000910020	1" 1/2 Flange ø 240 mm-with connection for electrical immersion + flange plate(Bolly® 800÷1000) (Vaso inerziale W >1000)
5212000910019	2" Flange ø 240 mm-with connection for electrical immersion + flange plate (Bolly® 800÷1000) (Vaso inerziale W >1000)
5206000000051	1" 1/2 Flange ø 380 mm-with connection for electrical immersion + flange plate (Bolly® 1500)
5206000000052	2" Flange ø 380 mm-with connection for electrical immersion + flange plate (Bolly® 1500)



Art. Nr.	STAINLESS STEEL 316L VERSION
5212000000004	1" 1/2 Flange ø 180mm with connection for electrical immersion + flange plate (Bolly® 150÷1000)
5212000000005	2" Flange ø 180mm with connection for electrical immersion + flange plate (Bolly® 150÷1000)
5212000000006	1" 1/2 Flange ø 240mm with connection for electrical immersion + flange plate (Bolly® 1500÷2000) (Vaso inerziale X >1000)
5212000000007	2" Flange ø 240mm with connection for electrical immersion + flange plate (Bolly® 1500÷2000) (Vaso inerziale X >1000)

ACCESSORIES AND SPARE PARTS
CALORIFIERS - MULTYFUEL ENERGY CYLINDERS

MAGNESIUM ANODES (FOR POLYWARM® COATED ONLY)

The calorifiers corrosion protection is guaranteed not only by the internal coating material but also by the anodes.



Anode with insulated cap

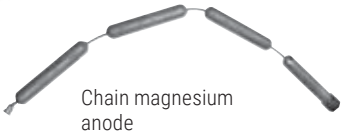

Chain magnesium anode

Art. Nr.	Description	Dimen. [mm]	AVAILABLE ON - **(nr. of anodes)**					
			Extra 1,2,3, Vasi Inerziali, Vasi Storage	**Interka Solare**	**Interka, Bolly® Murale**	**BOLLY® RANGE (ST, AP, BC, PDC, Classe A), Bollyterm® HP**	**Bolly® XL, Bolly® HY**	**COMBI**
5200000041007	N° 2 chain anodes + insulated cap + gasket - 3/4" M	22 x 631	–	–	–	–	–	800 **(1),** 1000 **(1),** 1500 **(1),** 2000 **(1)**
5200000041016	N° 2 chain anodes + insulated cap + gasket - 3/4" M	22 x 450	–	–	–	–	–	500 **(1),** 600 **(1)**
5200000041018	N° 1 chain anode + insulated cap + gasket - 1" 1/4 M	32 x 1900	–	–	–	–	Bolly® 1 400 **(1),** Bolly® 1 500 **(1),** 800**(1)**, 1000**(1)**	–
5200000041008	N° 2 anodes M8	32 x 200	–	150 **(1)**	–	–	–	–
5200000041009	N° 2 anodes M8	32 x 400	–	200 **(1)**, 300 **(1)**	–	–	–	–
5200000041010	N° 2 anodes + insulated cap 1" 1/4 M	32 x 350	200 **(1)** , 300 **(1)**	EVO 300**(1)**	200 **(1)**, 300 **(1)**	150 **(1),** 200 **(1)**	–	–
5200000041011	N° 2 anodes + insulated cap 1" 1/4 M	32 x 450	–	–	–	300**(1)**	200 **(1)**	–
5200000041012	N° 2 anodes + insulated cap 1" 1/4 M	32 x 650	800 **(1),** 1000 **(1)**, 2000 **(2)**	–	–	500**(1)**, 800**(1)** Bolly® 2 1000 **(2)**	Bolly® 1 300**(1)**, Bolly® 2 XL 500**(1)**	–
5200000041013	N° 2 anodes + insulated cap 1" 1/4 M	32 x 850	1300 **(1)**, 1500**(1)**, 2500**(2)**, 3000**(2)**, 4000**(2),** 5000**(2)**	–	–	Bolly® 1 1500 **(1),** Bolly® 2 1500 **(2)**, 2000 **(2)**	Bolly® 1 400 **(1)**, Bolly® 1 500 **(1)**	–
5200000041017	N° 2 anodes + insulated cap 1" 1/4 M	32 x 800	–	–	–	Bolly® 1000 **(1)**	–	–
5200000041014	N° 2 anodes + insulated cap 1" 1/4 M	32 x 520	500 **(1)**	–	–	400 (1), Bolly® 2 800 **(2)**	Bolly® 2 XL 300**(1)**	–
5200000041015	N° 2 anodes + insulated cap 1" 1/4 M	32 x 200	–	EVO 150**(1)**, EVO 200**(1)**	80 **(1),** 100 **(1),** 150 **(1)**	–	–	–

MAGNESIUM ANODE + ELECTRIC IMMERSION HEATER KIT FOR BOLLYTERM® HOME

Magnesium anode + electric immersion heater kit for Bollyterm® HOME

Art. Nr.	Kit includes:	AVAILABLE ON
5200000041019	- N° 1 magnesium anode 1" 1/4 M - N° 1 electric immersion heater (1,5 kW - 230 V)	Bollyterm® Home range

ACCESSORIES AND SPARE PARTS
CALORIFIERS - MULTYFUEL ENERGY CYLINDERS

ELECTRONIC ANODE WITH TITANIUM IMPRESSED ELECTRICITY (FOR POLYWARM® COATED ONLY)



Art. Nr.	Anode length [mm]	Connections M	AVAILABLE ON: Extra1,2,3 Vasi Inerz. e Storage Polywarm®	Interka, Interka Solare, Bolly® Murale	BOLLY® RANGE (ST, AP, PDC, BC, Classe A) Bollyterm® HP	Bolly® XL, Bolly® HY
5200000000008	200	1"1/4	200, 300	80, 100, 120, 150, 200, 300	150, 200, 300	200
5200000000009	500		500, 800	–	–	400, 500
5200000000011	400		1000, 1500	–	400, 500, 800, 1000.	300
5200000000012	2x 400		–	–	1500, Bolly® 2 800, 1000	–
5200000000013	2x 800		2000, 2500, 3000, 4000, 5000	–	Bolly® 2 1500	–

• Use
The Titanium electronic anode is , by opposite to the normal one, not subject to consumption and doesn't need any maintenance or replacement . The protection against corrosion is obtained ensuring the electrolyte power through the continuous energy produced by the titanium bar.
• Material
The anode is composed by a Titanium rod, with its active final part, that has to be connected to the vessel.
This system ensures the good working and a long life both to the anode and the cilinder.
• Operating conditions
The input disposal is positioned in a insulated box and it's equipped with a light led, located on front side. Green light=working OK – Red light = Wrong working. In this last case it's necessary to take the electrical plug away and get in touch with an installer , that will provide to put everything in good order.

• Advantage
1. Active protection through the power given by the titanium anode.
2. High level working flexibility, in order to fit to the different internal coatings and to the water capacity, ensured by an automatic regulation of the working electricity
3. Definitive and easy protection. It is important anyway to check that the electricity is constantly working.
4. Cancelation of any worries and maintenance problems and costs.

ELECTRONIC ANODE WITH TITANIUM IMPRESSED ELECTRICITY (FOR STAINLESS STEEL CALORIFIERS)

In normal use conditions of drinking water (European directive 98 / 83 CE) the standard cathodic protection (using magnesium anode) of the tanks is adequately enough. However, depending on the place of installation, the drinking water conditions may differ significantly from the standard reference. In these cases, when the chloride content exceeds 150 mg/lt, it is advisable to install a permanent Correx UP cathodic system on the tank, which is maintenance-free.



Art. Nr.	Description / Anodes lenght [mm]	AVAILABLE ON: Vaso Inerziale - Vaso Inerz. Compact			Extra 1 - Extra 1 Compact- Extra 1 Vapore		Extra 2			Extra 2 Compact	
5200000000015	N.2 Anodes/ 1X800/1x400	1500	–	–	–	–	–	–	–	–	–
5200000000016	N.3 Anodes/800	2000	2500	3000	1500	2000	–	–	–	–	–
5200000000017	N.4 Anodes/800	4000	5000	–	2500	3000	1500	2000	2500	2500	3000
5200000000018	N.5 Anodes/800	–	–	–	4000	5000	3000	4000	5000	4000	–

ACCESSORIES AND SPARE PARTS
CALORIFIERS - MULTYFUEL ENERGY CYLINDERS

MAGNESIUM ANODES KIT AVAILABLE ON ANODEN TESTER



Anode with insulated cap

The calorifiers corrosion protection is guaranteed not only by the internal coating material but also by the anodes.

Art. Nr.	Description	Dimen. [mm]	AVAILABLE ON Extra 1,2,3, Vasi Inerziali, Vasi Storage	Interka Solare	Interka, Bolly Murale	GAMMA BOLLY (ST, AP,BC,PDC Classe.A) Bollyterm® HP	Bolly XL, Bolly HY
5200000041001	N° 3 anodes + insulated cap + gasket - 1"1/4	32x 350	200 (1) , 300 (1)	300(1)	200 (1), 300 (1)	150 (1), 200 (1)	
5200000041002	N° 3 anodes + insulated cap + gasket - 1"1/4	32 x 450	–	–	–	300(1)	200 (1)
5200000041003	N° 3 anodes + insulated cap + gasket - 1"1/4	32 x 520	500 (1)	–	–	400 (1), Bolly® 2 800 (2)	Bolly®2 XL 300(1)
5200000041004	N° 3 anodes + insulated cap + gasket - 1"1/4	32 x 650	1000 (1), 800 (1), 2000(2)	–	–	500(1), 800(1) Bolly® 2 1000 (2)	Bolly® 1 300(1), Bolly®2 XL 500(1)
5200000041005	N° 2 anodes + insulated cap + gasket - 1"1/4	32 x 800	1300 (1), 3000(2)	–	–	Bolly® 1000 (1), Bolly® 2 1500 (2)	
5200000041006	N° 2 anodes + insulated cap + gasket - 3/4"	32 x 900	1500(1), 2500(2), 4000(2), 5000(2)	–	–	Bolly® 1 1500 (1), 2000 (2).	Bolly® 1 500(1)

ANODEN-TESTER



Art. Nr.	Description
5221000000031	Anoden Tester (2 units box)

ANODEN TESTER KIT
It is the new system to keep easily under control by seeing the consumption of the magnesium anode. You have just to push the button to check if the anode has to be replaced. Included with the anoden-tester, cap and boss.

EASY CONTROL ELECTRONIC DISPLAY



- 4 working possiblities . Manual + Daily – Weekly - weekend
- Control of 2 sources and an additional electrical immersion (Power up to 2500 W and running in Manual mode)
- Antilegionellosis programme for time and temperature included with the output for the by-pass electronic-valve to the Thermostatic mixing valve.
- Working control of the system trough the Display
- Alert message for the temperature's probes
- Control of the recycling pump
- Complete with 3 temperature'probes

ART. NR.	Versione	AVAILABLE ON
5220280000001	NOT MOUNTED	Systems already installed
5005000310002	MOUNTED ON TANK	SOFT INSULATION MODELS
5005000310003	MOUNTED ON TANK	HARD INSULATION MODELS

The mounted versions can be ordered only together with the tank

ACCESSORIES AND SPARE PARTS
CALORIFIERS - MULTYFUEL ENERGY CYLINDERS

RECYCLING KIT FOR CALORIFIERS AND BUFFER TANKS



The use of Cordivari's recycling kit allows to manage on the system a link of the DHW recycling.
The benefit is to improve the comfort of the user and to reduce the waste and produce DHW immediately at the right temperature.
In particular, the Cordivari electronic recycling kit allows to:
- Maximize the energy saving by programming the recycling temperature on basis of our own habits.
- Daily and weekly scheduling to manage until 8 time slots for each day of the week
- Constantly monitoring the working and the efficiency of the recycle thanks to the self-diagnostics of the system
- Works also without the temperature's probe into system where the probe is not foreseen, through programmable temporary actions.

ART. NR.	
5221000000054	Control display + pump (for D.H.W.)

VALVES KIT

RECYCLE KIT - ECO COMBI



Art. Nr.
5221000000019
3/4" Connection

RECYCLE KIT AND MIXER - ECO COMBI



Art. Nr.
5221000000020
3/4" Connection

SAFETY VALVE PRIMARY CIRCUIT



Art. Nr.	calibration
5302000000021	2,5 bar
1/2" M x 1/2" F Connection Interka solare	

See catalogue INTEGRATED SOLAR THERMAL SYSTEM

TEMPERATURE AND PRESSURE SAFETY VALVE



Art. Nr.	calibration
5302000000020	90°C/6bar
1/2" M x 1/2" F. Connection (Avoiding over temperature when there is no withdrawing of DHW.)	

See catalogue INTEGRATED SOLAR THERMAL SYSTEM

BUFFER TANKS CONNECTING KIT

Stainless steel extensible connecting hose



Art. Nr.	Connection	Length
5006170001001	1" 1/2	200 ÷ 400 mm

ACCESSORIES AND SPARE PARTS
CALORIFIERS - MULTYFUEL ENERGY CYLINDERS

ADJUSTABLE SUPPORTING FEET FOR BOLLY®

3 adjustable supporting feet, allowing a correct positioning of the Bolly at not in-level floor.

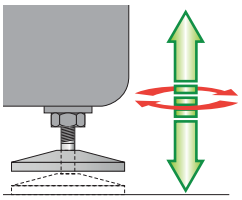

Art. Nr.	Description
5221000000029	Kit 3 adjustable supporting feet

BOLLY® PRIMO WALL FIXING KIT

Fixing kit for wall mounting (vertical or horizontal) for BOLLY PRIMO, including galvanized steel brackets and PVC bottom caps.





ART. NR.	Bolly® Primo Model
5221000000069	100
5221000000070	150
5221000000071	200
5221000000072	300





HYDRAULIC SAFETY GROUP

This accessory includes, a 8 bar safety valve, nonreturn valve, 2 on-off valves.
Its function is to protect tha sanitary circuit from overpressure (according to italian national regulation), fully covered inside the carter.



Art. Nr.	Connection	Pressure
5760000001001	1"	8 bar
5760000001002	3/4"	8 bar

THERMOMETER

1/2" connection Thermometer- - from 0°-120°C



Art. Nr.	Description	Diameter [mm]
5032240000107	5 units box	60

ACCESSORIES AND SPARE PARTS
HYDRONIC SYSTEMS

RECYCLE KIT FOR MACS® ELECTRONIC MODULE



The recirculation kit for Electronic MACS® module allows the implementation of a sanitary recirculation ring on the system where modules are installed.
The main advantage of such sanitary recirculation ring is to improve comfort and speed in achieving and enjoying the desired DHW temperature, reducing energy waste.
The control unit included as standard with electronic MACS® modules allow the complete management of all settings of the recirculation ring, such as temperature, setting etc…

ART. NR.	
5221000000073	D.H.W. recirculation group

RECYCLE KIT FOR PUFFERMAS® DOMUS



The use of Cordivari's recycling kit allows to manage on the system a link of the DHW recycling.
The benefit is to improve the comfort of the user and to reduce the waste and produce DHW immediately at the right temperature.

ART. NR.	
5221000000102	D.H.W. recirculation group

THERMOSTATIC SWITCH VALVE



Auto-operated thermostatic switch valve, calibrated at 45°C. It can easily integrate solar thermal systems for DHW production with a boiler.

ART. NR.	Connections	
5046000000007	3/4"	See catalogue INTEGRATED SOLAR THERMAL SYSTEM
5046000000008	1"	

ACCESSORIES AND SPARE PARTS
HYDRONIC SYSTEMS

PHC - STAINLESS STEEL 316L PLATES SPARE PARTS



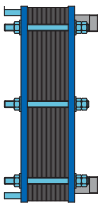

Description	Suitable for	Art. Nr.
N° 2 316L stainless steel plates + gaskets already mounted *(until stocks are exhausted)*	**PHC 3120**	5250400000001
	PHC 4620	5250400000002
	PHC 7420	5250400000003
	PHC 7431	5250400000004
	PHC 12046	5250400000005

Description	Suitable for	Art. Nr.
2 units box	**PHC 3120**	5250400000011
2 units box	**PHC 4620**	5250400000012
2 units box	**PHC 7420**	5250400000013
2 units box - **H** version	**PHC 7431**	5250400000014
2 units box - **L** version	**PHC 7431**	5250400000015
2 units box - **H** version	**PHC 8031**	5250400000016
2 units box - **L** version	**PHC 8031**	5250400000017
2 units box - **H** version	**PHC 12046**	5250400000018
2 units box - **L** version	**PHC 12046**	5250400000019

PHC - GASKETS

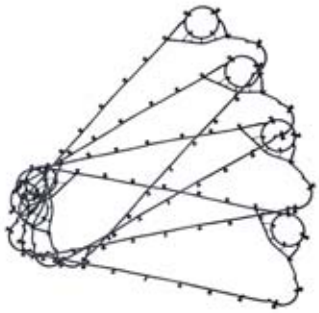

Description	Suitable for	Art. Nr.
NBR gaskets - 10 units box	**PHC 3120**	5019220401011
EPDM gaskets - 10 units box		5019220401012
NBR gaskets - 10 units box	**PHC 4620**	5019220401013
EPDM gaskets - 10 units box		5019220401014
NBR gaskets - 10 units box	**PHC 7420**	5019220401015
EPDM gaskets - 10 units box		5019220401016
NBR gaskets - 14 units box	**PHC 7431**	5019220401017
EPDM gaskets - 14 units box		5019220401018
NBR gaskets - 14 units box	**PHC 8031**	5019220401019
EPDM gaskets - 14 units box		5019220401020
NBR gaskets - 14 units box	**PHC 12046**	5019220401021
EPDM gaskets - 14 units box		5019220401022

ACCESSORIES AND SPARE PARTS
WATER PRESSURE TANKS

PRESSURE VESSELS VISUAL LEVEL INDICATOR



The level indicator includes: transparent tube, two brass faucets and gaskets.

Art. Nr.	Pressure vessel model	Tube length [m]
5303000000040	From 100 to 2500 (stainless steel 1000 and 2000 excluded)	1
5303000000041	From 3000 to 5000 (stainless steel 1000 and 2000 included)	2
5303000000042	>5000 on request	3

SECURITY VALVES FOR COMPRESSED AIR

These valves avoid an overpressure of the air receiver tank and water pressure tank.
The choice of the valve has to be made by the Engineer, according on the maximal pressure of the tank and also considering the drain exit.
All valves are provided with a CE conformity certificate from an external laboratory. Installation, maintenance and checking is also ruled according to specific national legislation.



Safety Valve

Art. Nr.	Units box	Connection	Calibration [Bar]
5302000001001	5 pcs	3/8"	4,6
5302000001002		3/8"	5,6
5302000001003		3/8"	7,4
5302000001004		3/8"	9,3
5302000001005		3/8"	10,4
5302000001006		3/8"	11,2
5302000001010	3 pcs	3/4"	4,6
5302000001011		3/4"	5,6
5302000001012		3/4"	7,4
5302000001013		3/4"	10,4
5302000001014		3/4"	11,2
5302000000012	1 pcs	1"	5,6
5302000000007		1"	7,4
5302000000016		1"	10,4
5302000000008		1"	11,2

MANOMETER

They indicate the pressure in the tank. All manometers have a red signed maximum level.



Art. Nr.	Units box	Connection	Amplitude [Bar]	Red level at [Bar]
5300000001001	5 pcs	1/4"	0/10	6
5300000001002		1/4"	0/16	8
5300000001003		1/4"	0/16	10
5300000001004		1/4"	0/16	12
5300000001005		1/4"	0/16	5
5300000001006		1/4"	0/16	11

ELASTIC EPDM MEMBRANE

The elastic membrane in EPDM use are mounted on expansion vessels in order to divide the liquid from the gaseous phase. Doing so the circulating water is pure giving to the system the warranty to be suitable for drinking.



Art. Nr.	Description
5700000410106	for vessel of 24 lt - 10 units box
5700000410107	for vessels 100 lt with flange Ø137 mm - 5 units box
5700000410003	for vessels 200-300 liters and 100 liters with flange Ø 254 mm
5700000410004	for vessels 500 liters
5700000410108	for vessel from 50-60 liters - produced up to 2003 - 5 units box
5700000410109	for vessel from 80 liters - produced up to 2003 - 5 units box

ACCESSORIES AND SPARE PARTS
WATER PRESSURE TANKS

MANHOLE - HANDHOLE

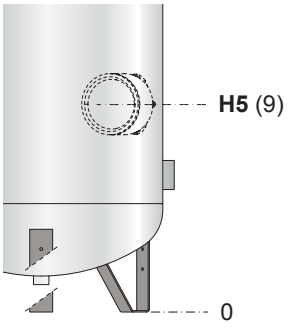

2014/68/UE		Manhole (optional)		Handhole (optional)	
Model	Working Pressure [bar]	H5	9	H5	9
		[mm]		[mm]	
1500	8	818	400x300	818	150x100
2000		845	400x300	845	150x100
3000		985	400x300	985	150x100
4000 (*)		1011	400x300	1011	150x100
5000 (*)		1161	400x300	1161	150x100
8000		1163	400x300	1163	150x100
10000		1163	400x300	1163	150x100
1000	12	/	/	840	150x100
1500		845	400x300	818	150x100
2000		978	400x300	845	150x100
2500		985	400x300	978	150x100
3000		1011	400x300	985	150x100
4000 (*)		1161	400x300	1011	150x100
5000 (*)		1163	400x300	1161	150x100
8000		1163	400x300	1163	150x100
10000		1167	400x300	1163	150x100
1000	15	/	/	840	150x100
1500		818	400x300	818	150x100
2000		845	400x300	845	150x100

(*) Manhole standard on 4000 - 5000 lt Polywarm® version

AIR COMPRESSOR RECEIVERS KIT

Includes a safety valve , a gauge (manometer) and its tap-tray.



Art. Nr.	Description
5303000000001	Kit for 200 up to 710 lt compressed air receivers (11 bar), with security valve of 7.500 l./min P calibration 10,4 bar
5303000000002	Kit for 900 lt compressed air receivers (11 bar), with security valve of 29.300 l./min P calibration 10,4 bar
5303000000003	Kit for 1.000 up to 10.000 lt compressed air receivers (12 bar), with security valve of 31.400 l./min P calibration 11,2 bar
5303000000004	Kit for 1.000 up to 10.000 lt compressed air receivers (8 bar), with security valve of 21.700 l./min P calibration 7,4 bar
5303000000005	Kit for 270 up to 2.000 lt compressed air receivers (15 bar), with security valve of 9.600 l./min P calibration 13,5 bar

CANALIZATION FOR BOLLYTERM® HOME

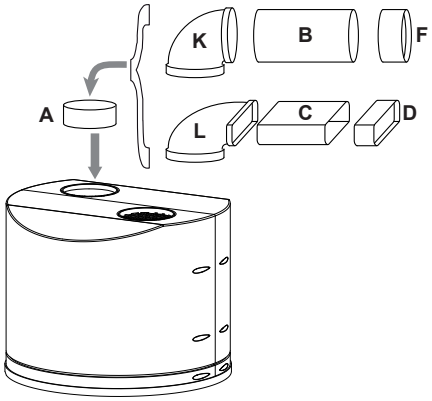

PLASTIC ELEMENTS FOR CANALIZATION

		Art. Nr.	Description
	A	5221000000085	Stub pipe of Ø 125 mm Length 75 mm
	B	5221000000086	Tube of Ø 125 Mm Length 1200 mm
	C	5221000000087	Rectangular tube of Ø 150x70 mm Length 1200 mm
	D	5221000000088	Rectangular plastic joint Ø 150x70 mm
		5221000000089	Horizontal joint from round pipe of Ø125 mm Rectangular Ø 150x70 mm
	F	5221000000090	Round joint Ø 125 mm
		5221000000091	Flexible tube Ø 125 mm Length 1000 mm
		5221000000092	Flexible rectangular tube Ø 150x70 mm Length 1000 mm
		5221000000093	Rectangular curve Ø 150x70 mm horizontal

		Art. Nr.	Description
		5221000000094	Rectangular curve Ø 150x70 mm vertical
	K	5221000000095	Round elbow curve Ø125 mm
	L	5221000000096	Vertical curve from round Ø 125 mm to rectangular Ø 150x70 mm
		5221000000097	Pair of pipe clamps Ø 150 mm
		5221000000098	Pair of brackets for rectangular tubes Ø 150x70 mm
		5221000000099	Plastic grid with fixed fins for tubes of Ø 125 mm
		5221000000100	Roll of adhesive white tape for tubes, width 50 x length 10 mt
		5221000000101	Plastic pipe flange for tubes of Ø 125 mm

CANALIZATION FOR BOLLYTERM® HOME

CANALIZATION EXAMPLES

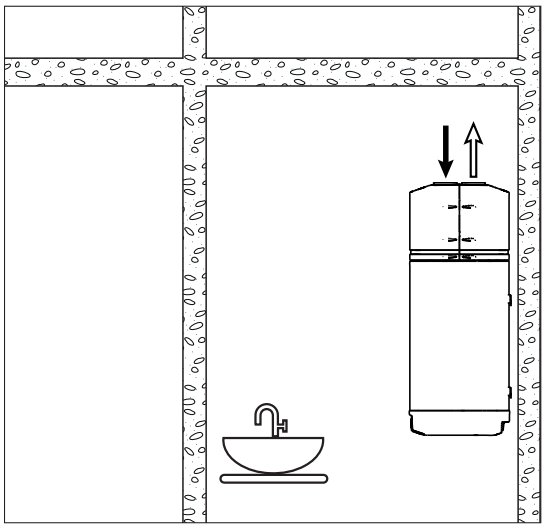

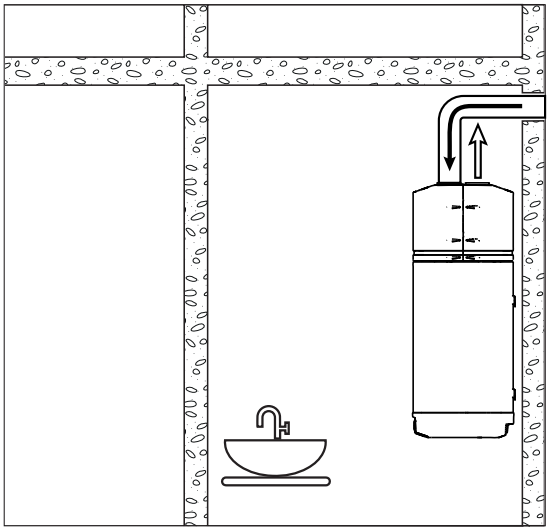

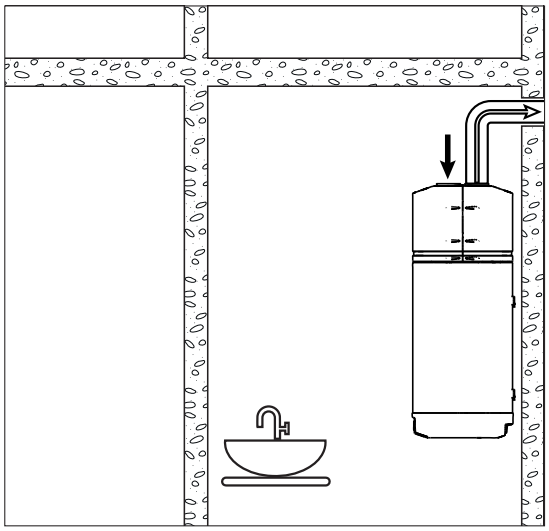

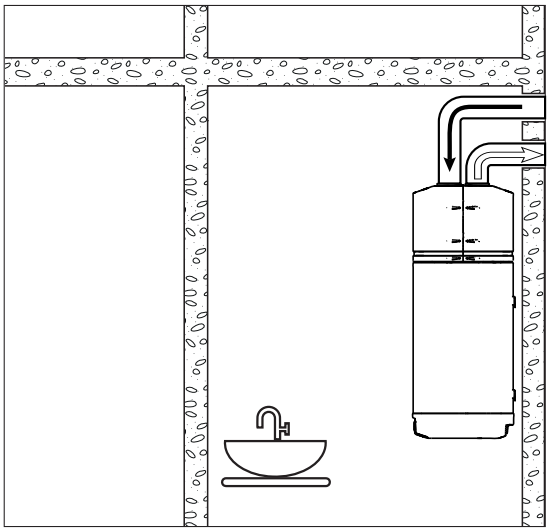

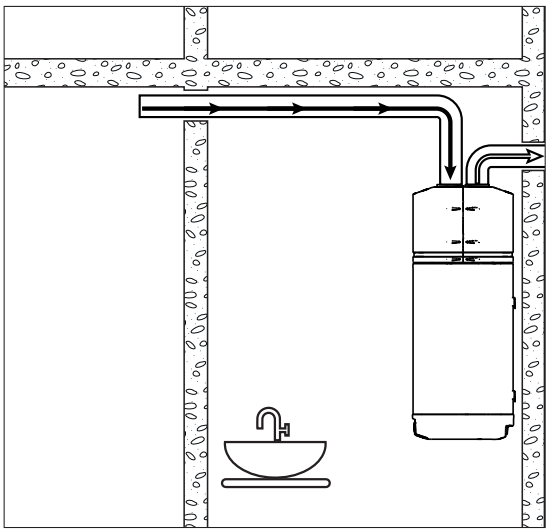

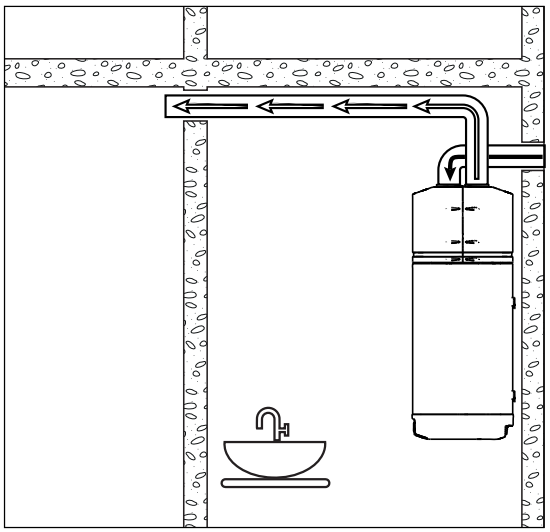

TECHNICAL SUPPORT & REGULATIONS





INSULATIONS

THERMAL INSULATION

Thermal efficiency of calorifiers and buffer tanks Cordivari is optimized with special insulations, that are essential components for every hot water storage, keeping the temperature stable with low heat loss.
Cordivari insulations reduce at minimum level temperature losses, with consequently energy savings.
Insulation on calorifiers and buffer tanks are manufactured using the best available materials.



NOFIRE® POLYESTER FLEECE

Material with low thermal conductivity. From an energetical and ecological point of view, the polyester fleece is one of the best perfomer, obtained using recycled and environmental friendly material.
The polyester fleece is unalterable at high temperatures, flexible, durable, non-toxic, insensitive to chemicals, it doesn't rot, hygienic and transpiring.
High insulation capacity with a thermal conductivity λ of 0.039 W/mk and a fire resistance class of B-s2d0, according to european standard EN 13501.

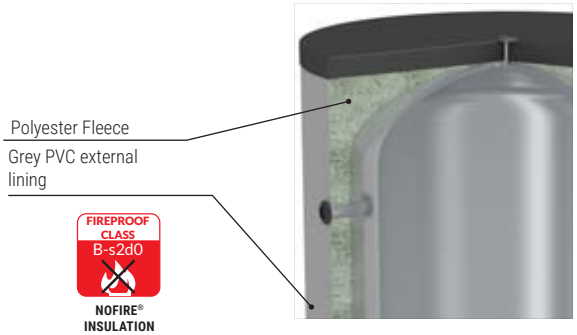



RIGID EXPANDED POLYUERETAN

The term polyurethane refers to a vast family of polymers, which are used for different purposes. In thermo-hydraulics the use of expanded polyurethane as thermal insulation is widespread, since it has excellent insulating properties.
The Cordivari tanks have a thermal insulation of rigid polyurethane foam based on the models that differ from each other for different purposes. This layer is foamed directly on the body of the tank, whose surface is treated with a special release agent which facilitates its removal at the end of this technical life. This insulating layer has a high insulating capacity and high polymer density.

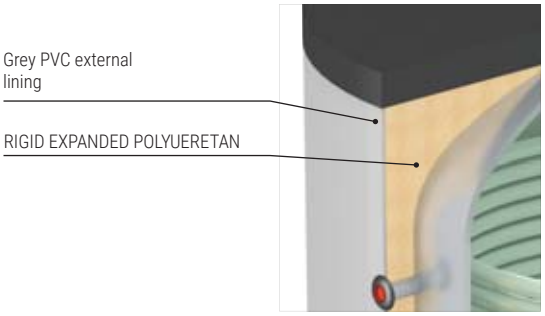



GLASS WOOL INSULATION AND ALUMINUM EXTERNAL LINING

The D.H.W. Storage Tanks with insulation A1 represents the most advanced solution in terms of preventing fire risks on thermal power plants or technical rooms.
With glass wool and an external lining completely made in Aluminum material, this insulation combines the high thermal insulations properties with a fire proofing resistance class A1, according to european standard EN 13501.

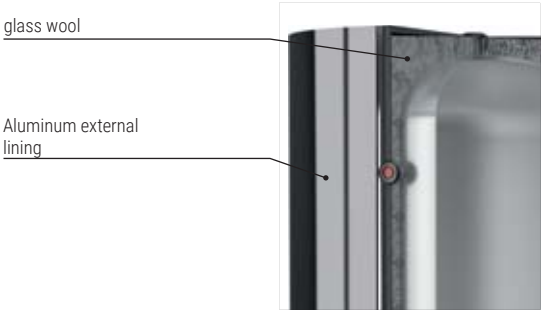

EUROCLASSI DI REAZIONE AL FUOCO SECONDO EN 13501

Fire Reaction			Smoke release			(drops)		
A1	FIRE PROOF		NO TEST REQUIRED			NO TEST REQUIRED		
A2		*Fireproof*	s1		*None*	**d0**		*No in the first 10 minutes*
B		*Limited*	**s2**		*Limited*	d1		*Limited Dripping of incandescent materials in the last 10 seconds*
C		*Decreasing performance levels from C to E reaction class*	s3		*High*			
D						d2		*High*
E			E	NO TEST		E	NO INDICATION or d2	
F	No performance declared							

MATERIALS

All Cordivari Products are manufactured using high level quality of raw materials and internal finishes:

STAINLESS STEEL 316L

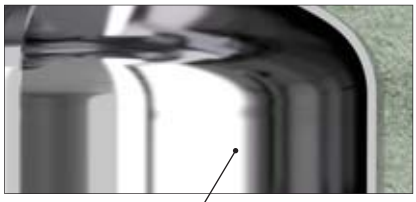





The choice of stainless steel material on calorifiers aims for an absolute quality result.
Material with high performances, entirely hygienic and atossic, suitable for Domestic Hot Water, resistant to low and high temperatures, 100% recyclable.
Cordivari is leader in the production of Stainless steel 316L (EN 1.4404) calorifiers with high quality standard levels.

POLYWARM®

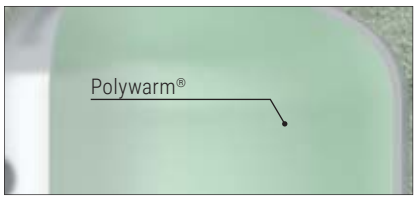

WATER HYGIENE AND PROTECTION

- **Drinkability and Hygiene at 100%;**
- **Elasticity E>20%;**
- **Capacities up to 6000 lt;**
- **Temperature resistance till 130°C;**
- **Thickness >200 µm for a total protection to corrosion.**



Our customer oriented approach and our long tradition as cylinder manufacturer allow us to offer cutting edge solutions for production and storage of Domestic Hot Water Cylinders.
Polywarm® properties have passed the adherence tests according to BS3900-E6 and DIN 53151, hardness tests according to ASTM D 3363-74 (matite), Impact resistance test (2 Joule) according to BS3900-E6 and at 10 kg x cm (UNI 8901).
Polywarm® has excelled in chemical and durability testing (>1000 hours) in salt spry testing according to UNI 5687-73 and Humidity cycle according to UNI 8744.
Drinkability and Hygiene at 100%, elasticity E>20%, capacities up to 6000 litres, temperature resistance till 130°C. Thickness >200 µm for a total protection to corrosion.
Polywarm® Hygienic Certifications:

- Certificate of conformity for Domestic Hot Water of organic coating for food uses Polywarm® granted by IPL (Institut Pasteur de Lille - France).
- Test report of internal treatment for food use Polywarm® in accordance with D.M. nr. 174 del 06/04/2004 granted by SSICA Laboratory of Parma - Italy.
- Certificate OFI - Vienna , Austria, according to DVGW W270.
- WRAS - Water Regulation Advisory Scheme certificate

HOT GALVANIZING PROCESS

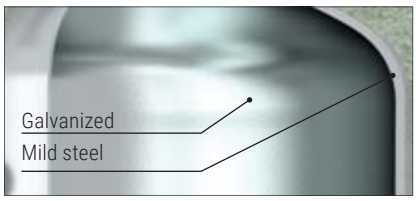





The galvanizing process protect the steel from corrosion, granting a long life product.
Thank to the high temperatures of the treatment, the galvanizing process helps to get better performances.
Cordivari premises are equipped with a high-tech hot galvanizing system. The tank is dipped in a melted zinc bath (99,99% pure) according to European standard UNI EN 1179, lead percentage 100 times less than the maximal value permitted by D.M. n.174 dated 06/04/2004. Cordivari galvanizing process does not contain dangerous material, so to be certified for D.H.W. use.

HIGH PERFORMANCES ANTI-LEGIONELLA® HEAT EXCHANGER

D.H.W. OPTIMIZED ACCUMULATION

Cordivari Heat Exchanger , with tubes bent to the bottom, are able to heat the complete quantity of water in an homogenous way, also in the lower part of the calorifier. This will ensure total production of the storage of D.H.W. in the calorifier. (10%-15% more than standard heat exchangers). Maximal hygiene will be guaranteed.

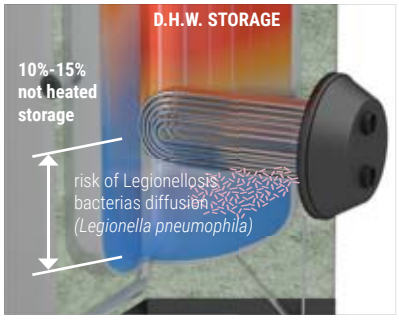

STRAIGHT HEAT EXCHANGER: between 10% - 15% of storage volume is not heated with relevant thermal inefficiencies and risk of Legionellosis bacterias diffusion.

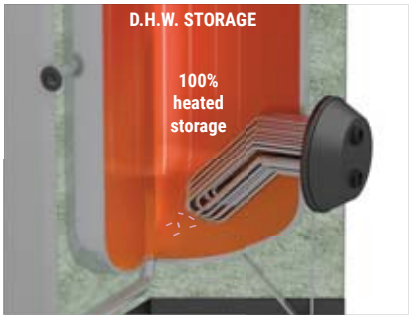

BENDED HEAT EXCHANGER: 100% volume will be heated with relevant thermal efficiency and D.H.W. healthiness increase.



"EASY CONTROL" Electronic Display mounted on Cordivari calorifiers allows also to plan periodically sanitary water heating in order to ensure its healthiness.

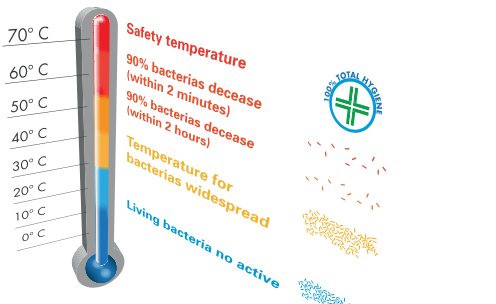

DIMENSIONING OF BUFFER TANKS

The calculation of a buffer tank's volume depends on the type and on the potential of the heat generators. The installation of a buffer tank has a double function, as it allows the generator to work regularly by limiting the number of interruptions, and it also constitute a thermal flywheel for the heating system, improving the overall comfort of the installation. Cordivari offers a wide range of buffer tanks, providing besides the mainstream version also combined solutions ideal for production of domestic hot water. The wide spectrum of products available is characterized by advanced technology that allow a strong thermal stratification, to consistently reduce the energy consumption.
For calculation purposes we give an indication of the volumetric ratios according to the thermal potential of various sources with non-continuous operation. These suggestions and merely indicative and cannot substitute a closer evaluation made by a qualified technician.

HEAT PUMP

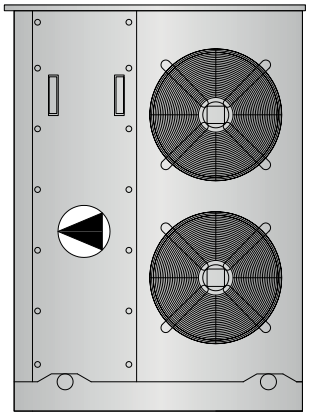

1 kWt~10÷15 LITERS

FIREPLACE STOVE

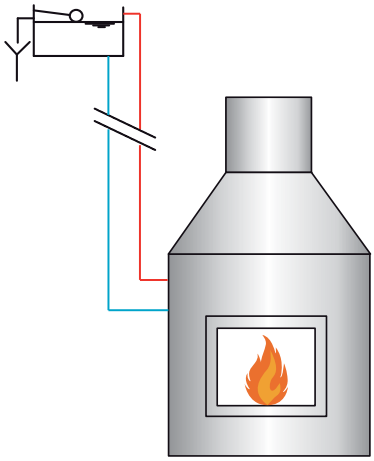

1kWt~30 LITERS

FLAT SOLAR COLLECTOR

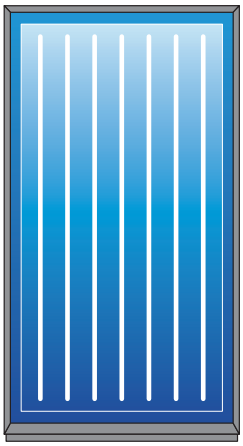

1 mq~60÷70 LITERS

POLYCOMBUSTIBLE BOILER

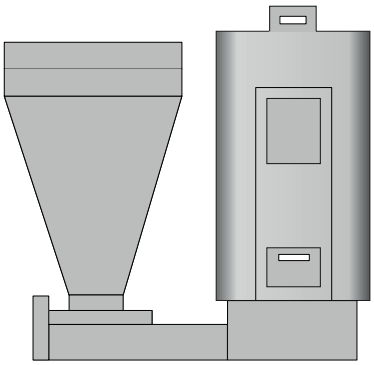

1 kWt~20 LITERS

PELLET STOVE

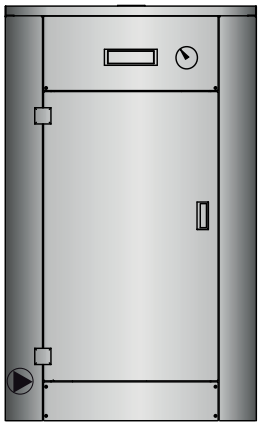

1 kWt~20 LITERS

VACUUM SOLAR COLLECTOR

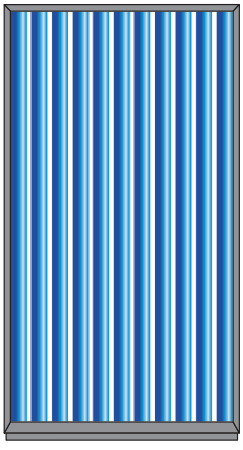

1 mq~60÷70 LITERS

DIMENSIONING OF THE EXPANSION VESSEL FORCED CIRCULATION SYSTEMS

The expansion vessel has a key function for the primary circuit of a solar thermal system with forced circulation (generally speaking, expansion vessels are important in any heating system). To calculate the nominal volume of the vessel refer to the following formula:

Vn = (Vu*(Pf+1)) / (Pf-Pi)

Where :
VN = nominal volume of the Expansion vessel [lt]
VU = useful volume of the Expansion vessel = Vu = (ΔV + Vc) * 1,1 [lt]
PF = maximum working pressure of the solar thermal system: to be considered in the designing phase of the project according to the characteristics of the materials used and the safety devices installed = 5,5 [bar]
PI = loading pressure of the solar thermal system: linked to the difference in level between solar collectors and expansion vessel (approximately 1 bar each 10 meters) plus a safety coefficient; in domestic systems the cold water loading pressure is about 2,5 [bar]

With:

ΔV = variation of the volume of the fluid = e * Vf [lt]
VC = fluid contained in the solar collectors [lt]
In which:
E = heat transfer fluid coefficient of cubic expansion = 0,07
VF = heat transfer fluid contained in the system

The heat transfer fluid contained in the system is given by the sum of:



fluid content in solar collectors	**VC +**
fluid content in pipes	**VT +**
fluid content in heat exchangers	**VS +**
fluid content in other components	**VA =**
	VF

The preload value of the expansion vessel will be 0,3-0,5 bar less than pressure Pi.

EXAMPLE

SOLAR THERMAL SYSTEM 500B2-10 TF

- 4 SOLAR COLLECTORS 2,5 MQ
- 1 CALORIFIER BOLLY® 2 500 LT
- 1 BASIC CIRCULATION GROUP
- 30 MT COPPER PIPE (SUPPLY + RETURN) D. 22 MM

To determine the necessary volume of the expansion vessel

VF = (VC +VT+VS+VA) ~ 31 LT

ΔV = EXVF= (0,07*31) = 2,17 LITERS

VU = (ΔV+VC)X1.1= (2,17+3,8)X1,1= 10,75 LITERS

VN = VUX(PF+1)/(PF-PI) = 6,56X(5,5+1)/(5,5-2,5) = 23,30 LITERS → **24 LITERS EXPANSION VESSEL**



REGULATIONS FOR A CORRECT INSTALLATIONS OF PRESSURE TANKS

OVERPRESSURE PROTECTION:
If the sanitary water installation exceeds the admissible values of pressure of the calorifier, a pressure regulator as far away as possible from the calorifier has to be installed.

• Calorifier with primary circuits fluid with temperature below 110°C

To avoid damages on products due to sudden changes of pressure, it is always necessary to provide an expansion system, according to local regulations.

Although some local standards and regulations state that this expansion system can simply consist of a safety valve with appropriate dimensions, the installation of a closed type expansion tank with non-toxic diaphragm is recommended to avoid frequent openings of the safety valve and to avoid any unnecessary overload of the DHW tank.
Cordivari heat exchangers are manufactured in accordance with 2014/68/EU directive and in reference to art. n. 4.3 of this directive they do not have to be marked CE.





• Calorifiers with primary circuit supplied by fluid with temperature exceeding 110°C (steam or hot water)
Water Heaters with primary circuit temperature above to boiling secondary fluid at 0.5 bar pressure must have safety devices (thermostat, pressure switch, level/min. pressure protection).
The provision on pressure working equipment shall be applied to primary circuit on Heat exchangers.



• Calorifiers for solar thermal systems
For calorifiers that not have to be marked CE, make sure that:
- Primary Circuit Temperature never exceeds 140°C (that can be reached only for limited periods of time).
- Maximum working pressure meets following restrictions: the result Pressure x Volume of exchanger must not exceed 50bar/liter:

$$P \times V \leq 50 \text{ [bar x liter]}$$

given the volume of fluid in the heat exchanger, is then possible to calculate with the above formula, the maximum permissible operating pressure for each heat exchanger - surface of collectors does not exceed 50m^2 and the potentiality is lower than the total usable at 35Kw
Above these limits, the exchanger (as well as the installation) is subject to requirements so as stated in provisions for in pressure working equipments (design, and plant testing also when in operation, periodic restructuring) it is therefore necessary to use designed and tested exchangers according to 2014/68/UE Pressure Equipement.



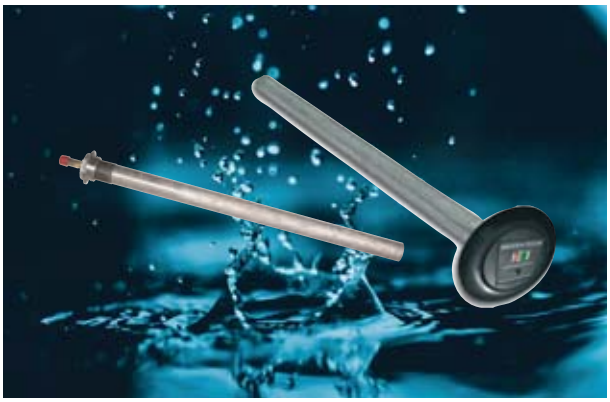

CORROSION PROTECTION

To avoid electro-chemical corrosion - and in order to comply with the warranty's conditions too - the cylinder has to be installed always with its cathode protection. Cordivari Srl gives according to the tank version:

• Anoden-tester magnesium bar, which allows to check the real consumption of the magnesium bar just pushing on the "tester button".

• Standard anode, where it is necessary the visual checking of the magnesium bar.

As accessory is also available the electronic anode which do not need to be replaced and need only an uninterrupted electricity. It is also necessary, for warranty purposes, that the water never exceeds the values of chemical and chemical-physical parameters recommended by regulations on subject. To avoid any galvanic currents tank grounding have to be done.

LEGIONELLOSIS PROTECTION

Legionellosis can widespread with temperatures between 30°C and 45°C. To avoid any risk water tank has to be accumulated at 60°C and never reach temperature lower than 50°C.

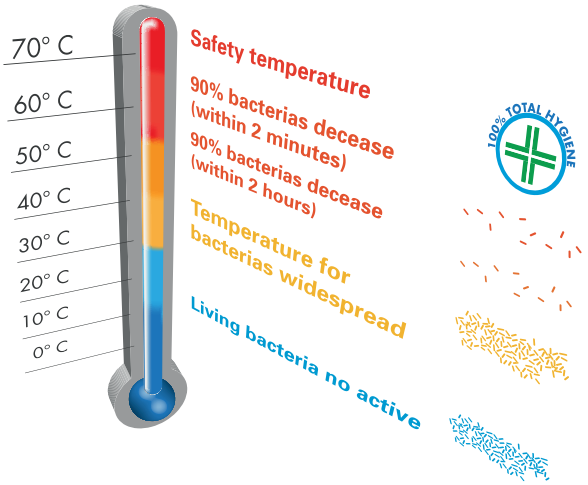



CALORIFIERS & BUFFERTANKS

Must always be installed protected from atmospheric agents on a base of proper solidity, checking before making the connections that there is sufficient space for extracting the heat exchanger, magnesium anode, eventual electric heater and other technical components specific to the various products, and for an easy opening of any inspection flange.

Make sure that the premises, or technical rooms intended to contain the tanks are provided with sufficient openings to facilitate the passage of the tanks by considering overall dimensions and avoiding therefore any demolition both when installing and removing the tanks.

For all cylinders with plate heat exchangers the hardness of the sanitary water inlet must be less than 30 ° f (French degrees).

It is necessary to install the storage tank / buffer tank providing appropriate and adequate drainage for any water leaks.

CHILLED WATER AND INERTIAL TANKS

Make sure that the premises, or technical rooms intended to contain the tanks are provided with sufficient openings to facilitate the passage of the tanks by considering overall dimensions and avoiding therefore any demolition both when installing and removing the tanks.

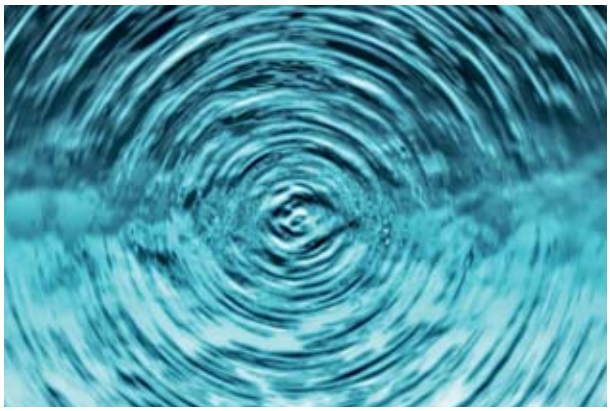

THERMAL STRATIFICATION

Thermal stratification is a physical process in which an hot fluid naturally tends to position itself higher than the cold one.

The fluid (water) is always moving, and tends to remix, therefore the natural process of stratification must be supported to maintain an increasing temperature gradient from bottom to upper part and avoid the mixing of liquid at different temperatures.

To allow stratification into the tanks means to create a remarkable difference in temperature storaging volume from upper to lower part. With important positive effects in terms of efficiency.
A proper stratificated storaging means to have quantities of hot water available in short time.
Example of stratification:
Heat received during the day is accumulated in the higher part of the tank, reaching a suitable temperature for end user, while in the lower part temperature remains cold and even when solar collectors have a temperature below the one needed (afternoon-evening), the heat exchanger continues and tanks is storaging further energy.

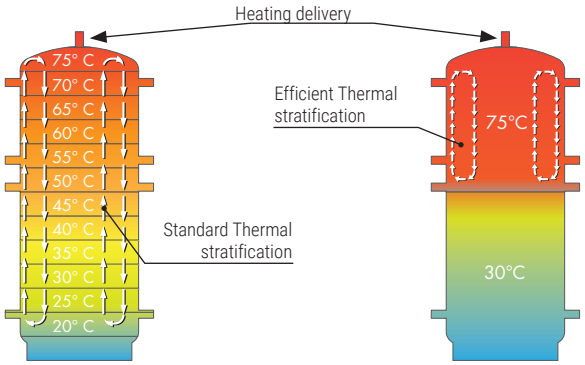

THE TECHNICAL SOLUTIONS FOR THE OPTIMIZATION OF THERMAL STRATIFICATION

"LABYRINTH SPREADER" (CORDIVARI PATENT)



Performances are optimized thanks to the "Labyrinth Spreader" (Cordivari Patent). Its spread shape allows a perfect stratification of the water that returns back from the plate exchange to the tank.
Heating installation efficiency is guaranteed.

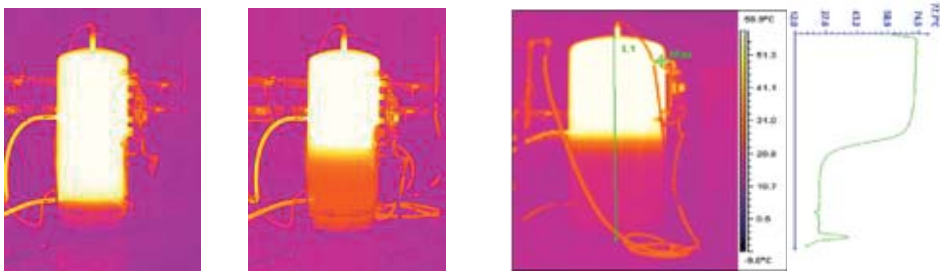

Sequence of thermographic images that show how Labyrinth Spreader works.

EASY STRATIFICATION BUFFERS (Cordivari Patent)

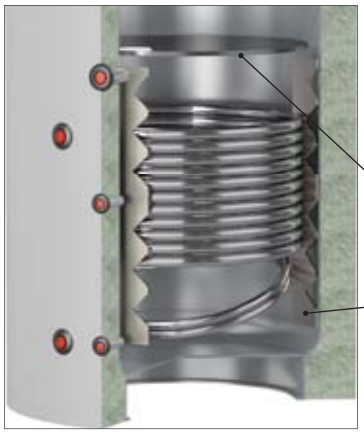

The heating return stratification system (Cordivari patent), avoid any turbolences, that would affect the thermal stratification inside the buffer tank. Thanks to this optimized solution, efficiency and energy savings are continuosly improved.

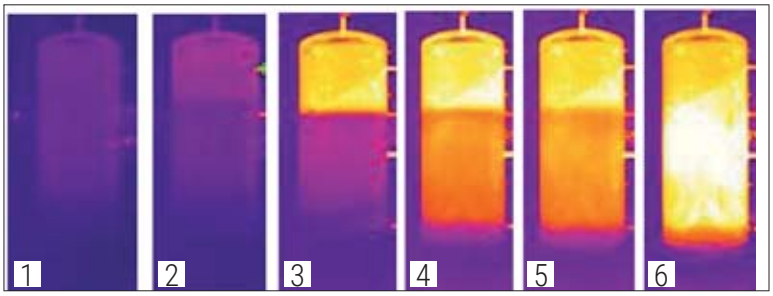

Sequence of thermographic images that show how a system works with the easy stratification Buffer.

NEW BUFFER TANKS CTS®

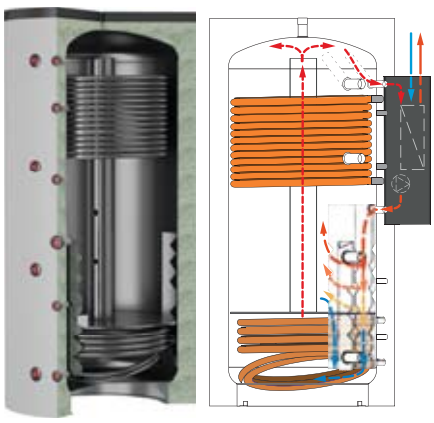

The new range of Buffer Tanks CTS® are Cordivari's last innovative storage tanks designed for Solar Thermal Systems.
The exclusive Stratification device CTS® allows to have a prompt delivery of energy suitable for the production of hot water.
The energy absorbed from the Solar Collectors is efficiently stratified in the upper part of the tank through the CTS® stratification device and separation plate already assembled in Buffer CTS®.
The thermal stratification inside the Buffer tanks will be then improved naturally, without any external valves thanks to the mixed combination of:

1. Labyrinth Spreader that allows a perfect stratification of the water that returns back from user thanks to its spread shape avoiding mixes of temperatures of storaged water
2. Upper thermal loading systems that concentrates in the upper part of the tank hot water produced by the lower solar fixed coil in short time and high temperature.
3. Lower fixed Heat Exchanger designed for an optimal relation between space and efficiency.

EXAMPLE OF INSTALLATION WITH **EXTRA ORIZZONTALE**

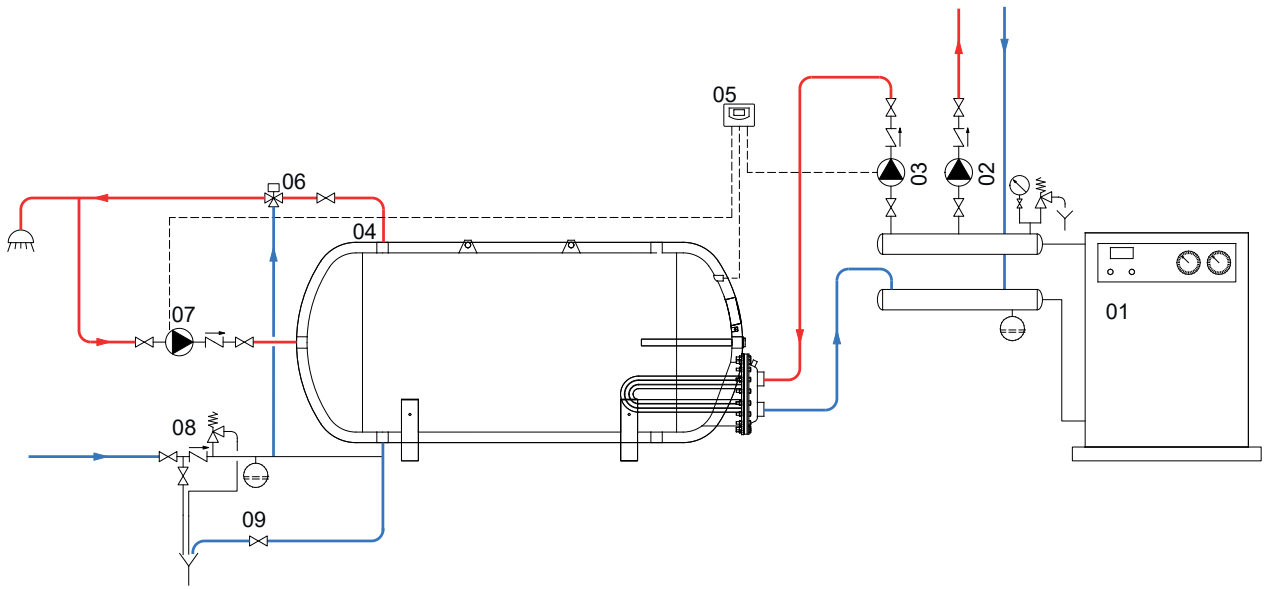

01	Generator	04	EXTRA ORIZZONTALE	07	D.H.W. recirculation group
02	Heating system circulation group	05	Easy Control electronic display/ thermostat	08	Hydraulic safety group
03	D.H.W. circulation group	06	Thermostatic mixing valve	09	Blowdown valve

EXAMPLE OF INSTALLATION WITH **EXTRA 1 VAPORE**

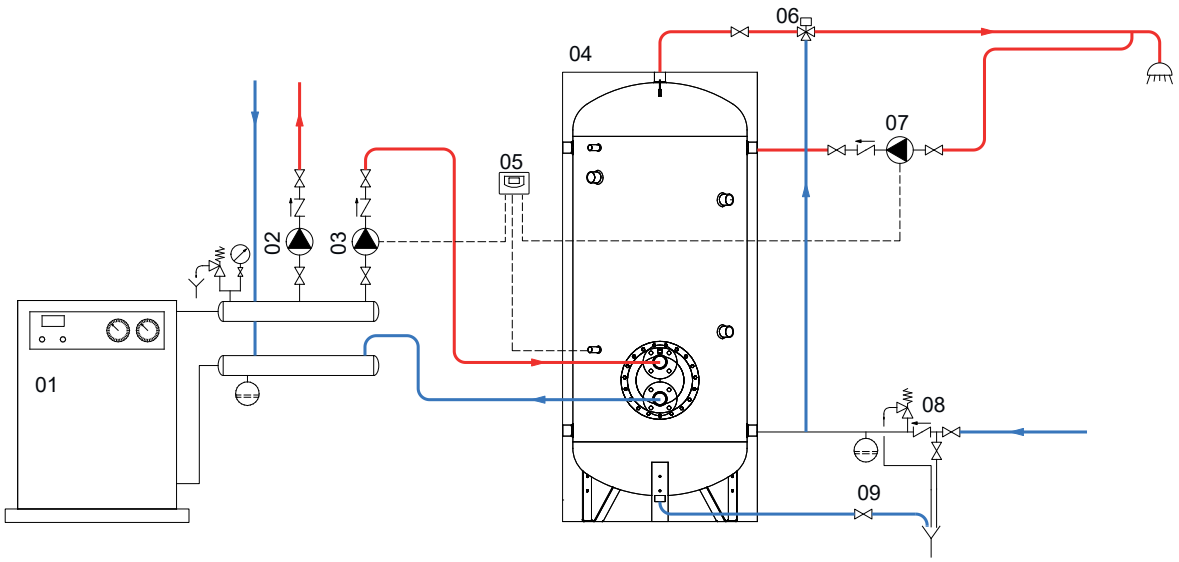

01	Generator	04	EXTRA 1 VAPORE	07	D.H.W. recirculation group
02	Heating system circulation group	05	Easy Control electronic display/ thermostat	08	Hydraulic safety group
03	D.H.W. circulation group	06	Thermostatic mixing valve	09	Blowdown valve

The following schemes are purely illustrative. To realize the installation, always refer to a qualified design engineer.

EXAMPLES OF INSTALLATION

EXAMPLE OF INSTALLATION WITH **EXTRA 2 VAPORE**

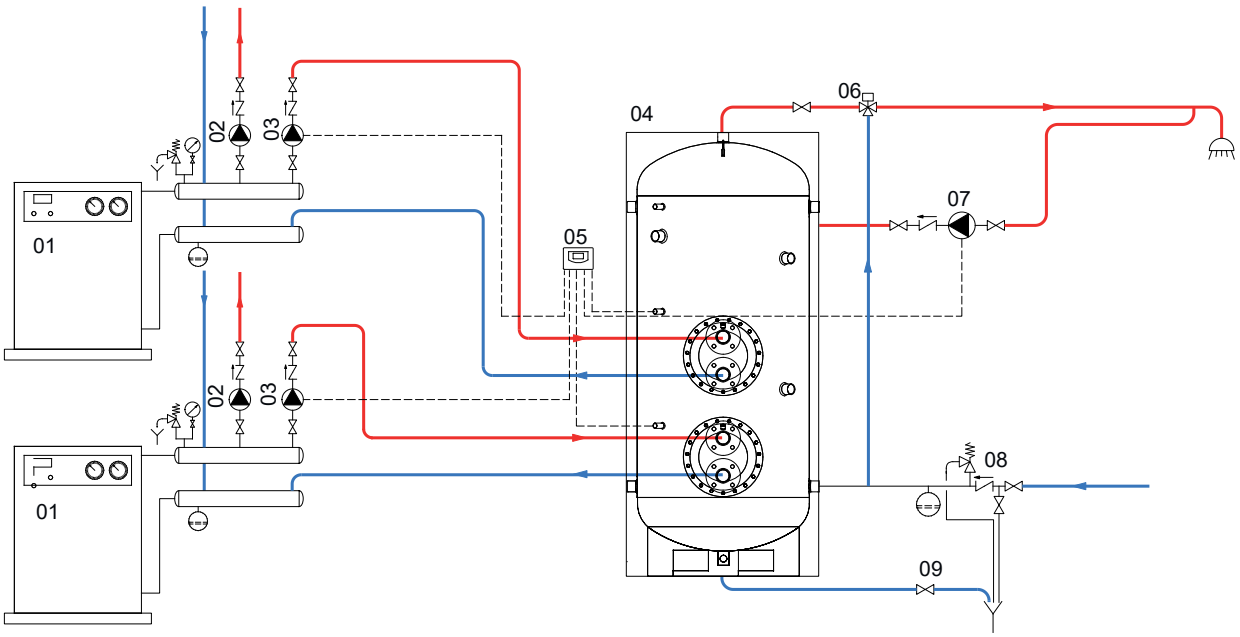

01	Generator	04	EXTRA 2 VAPORE	07	D.H.W. recirculation group
02	Heating system circulation group	05	Easy Control electronic display/ thermostat	08	Hydraulic safety group
03	D.H.W. circulation group	06	Thermostatic mixing valve	09	Blowdown valve

EXAMPLE OF INSTALLATION WITH **BOLLY® HY**

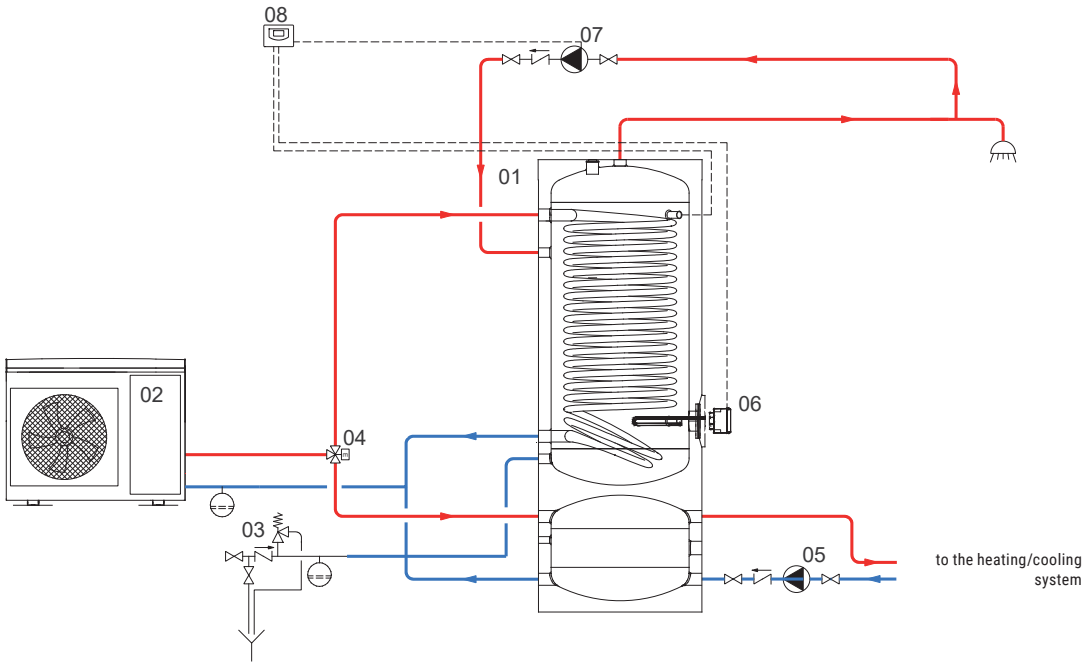

01	Generator	03	Hydraulic safety group	05	Air conditioning system circulation group	07	D.H.W. recirculation group
02	Heating system circulation group	04	By-pass solenoid valve	06	Electric immersion heater	08	Easy Control electronic display/thermostat

The following schemes are purely illustrative. To realize the installation, always refer to a qualified design engineer.

EXAMPLE OF INSTALLATION WITH **BOLLYTERM® HP**

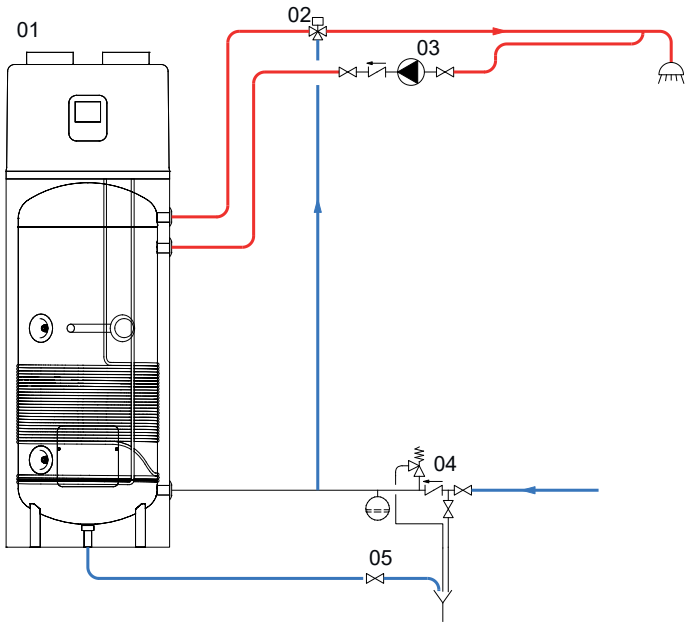

01	Bollyterm® HP	03	D.H.W. recirculation group	05	Blowdown valve
02	Thermostatic mixing valve	04	Hydraulic safety group		

EXAMPLE OF INSTALLATION WITH **BOLLYTERM® HP 1**

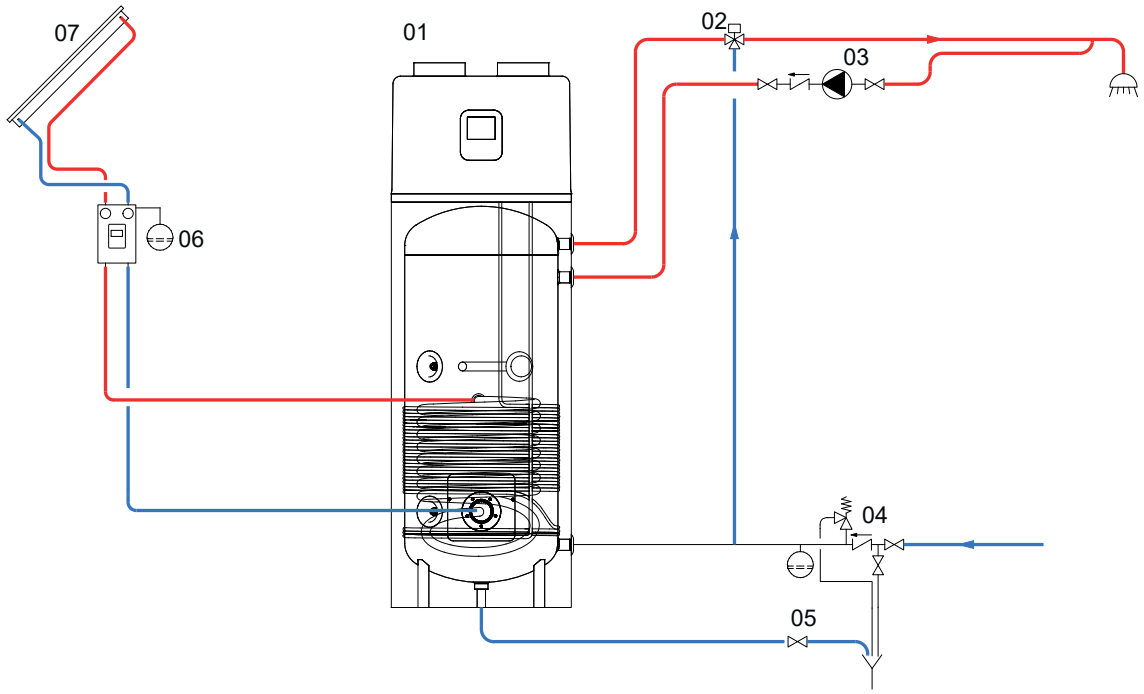

01	Bollyterm® HP 1	03	D.H.W. recirculation group	05	Blowdown valve	07	Solar panels
02	Thermostatic mixing valve	04	Hydraulic safety group	06	Solar system circulation group		

The following schemes are purely illustrative. To realize the installation, always refer to a qualified design engineer.

EXAMPLES OF INSTALLATION

EXAMPLE OF INSTALLATION WITH **BOLLYTERM® HP 2**

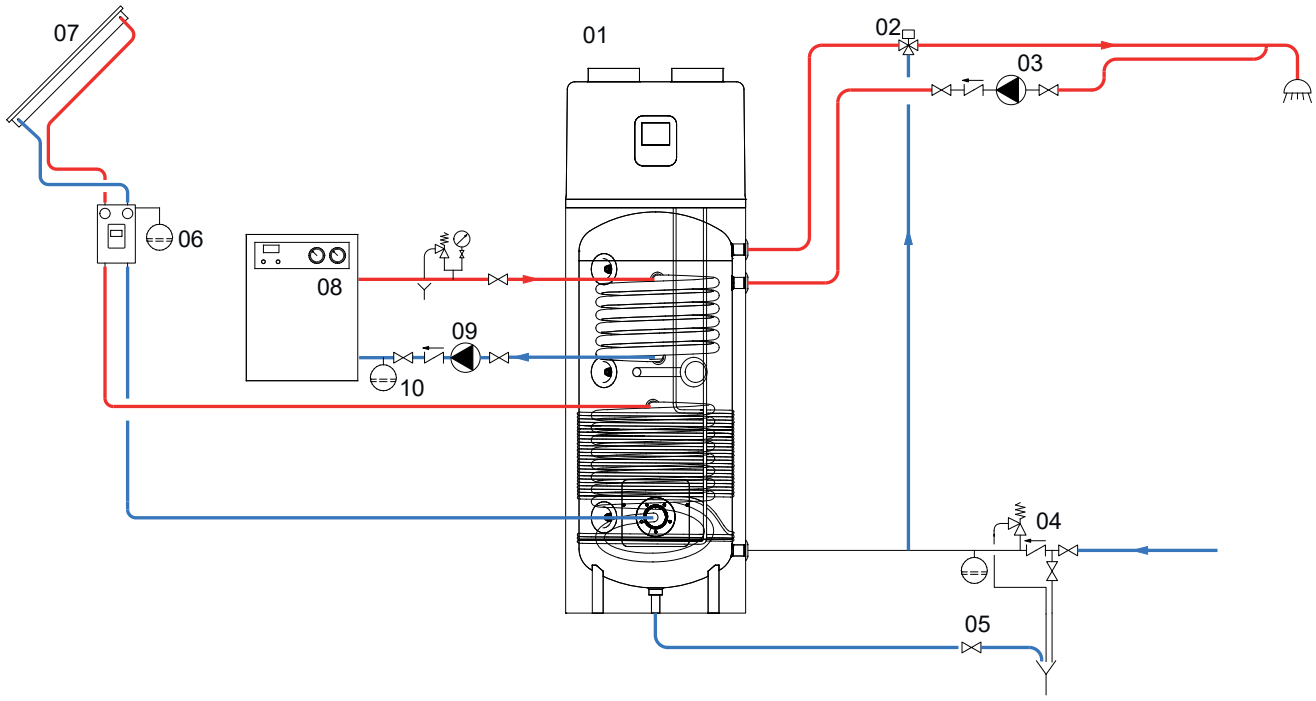

01	Bollyterm HP	04	Hydraulic safety group	07	Solar panels	10	Expansion vessel
02	Thermostatic mixing valve	05	Blowdown valve	08	generator		
03	D.H.W. recirculation group	06	Solar system circulation group	09	Circulation group		

EXAMPLE OF INSTALLATION WITH **BOLLY® 1 PDC**

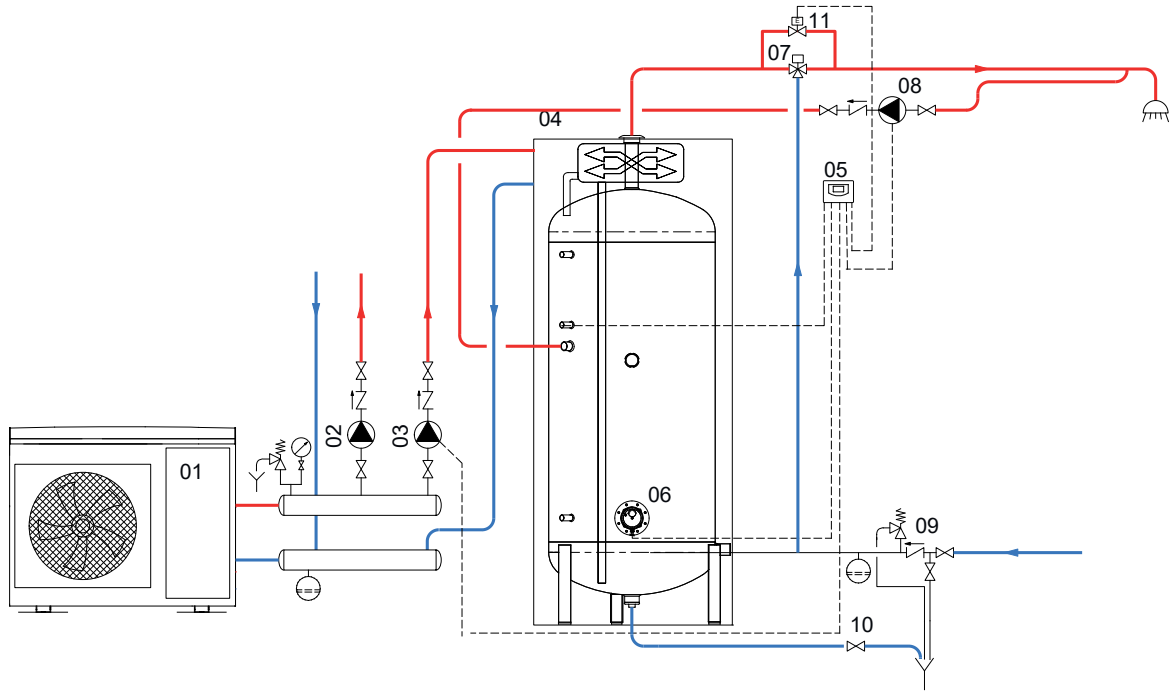

01	Generator (Heat pump)	04	Bolly PDC	07	Thermostatic mixing valve	10	Blowdown valve
02	Heating system circulation group	05	Easy Control electronic display/ thermostat	08	D.H.W. recirculation group	11	By-pass solenoid valve
03	D.H.W. circulation group	06	Electric immersion heater (optional)	09	Hydraulic safety group		

The following schemes are purely illustrative. To realize the installation, always refer to a qualified design engineer.

EXAMPLE OF INSTALLATION WITH **PUFFER**

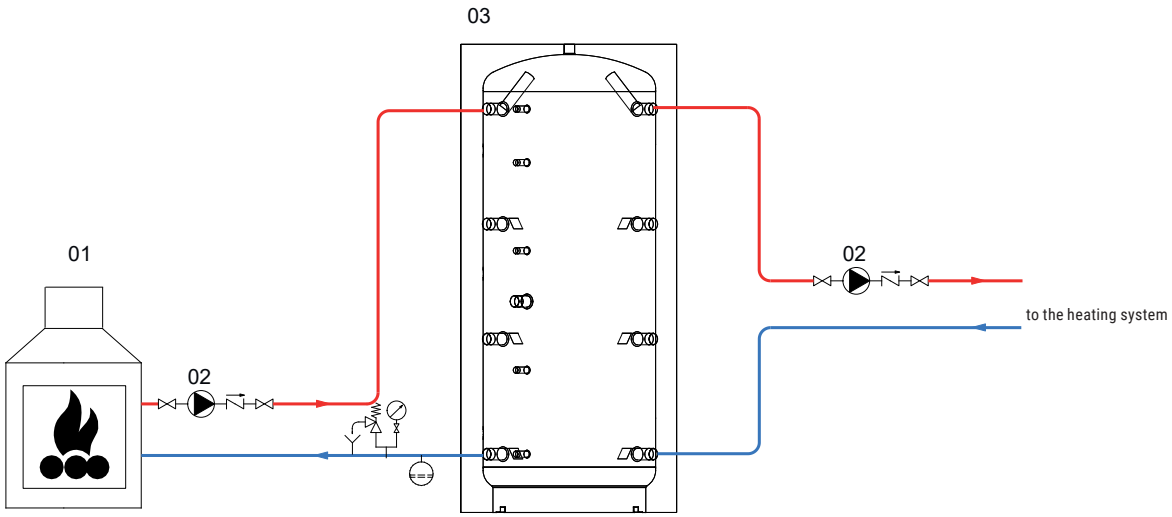

01	Generator	03	Puffer
02	Heating system circulation group		

EXAMPLE OF INSTALLATION WITH **PUFFER 1**

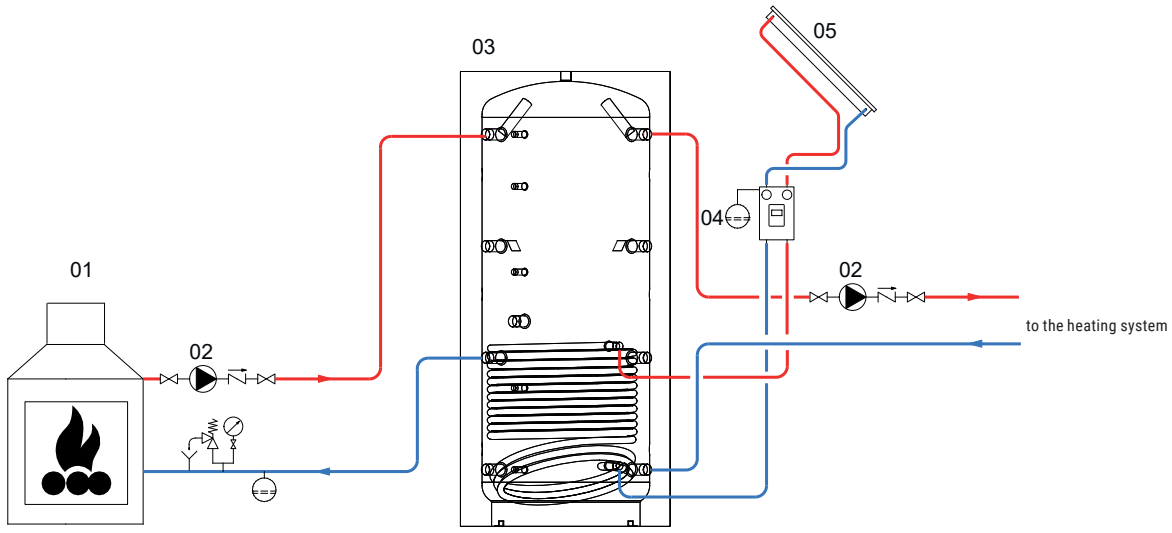

01	Generator	03	Puffer 1	05	Solar panels
02	Heating system circulation group	04	Solar system circulation group		

The following schemes are purely illustrative. To realize the installation, always refer to a qualified design engineer.

EXAMPLES OF INSTALLATION

EXAMPLE OF INSTALLATION WITH **PUFFER 2**

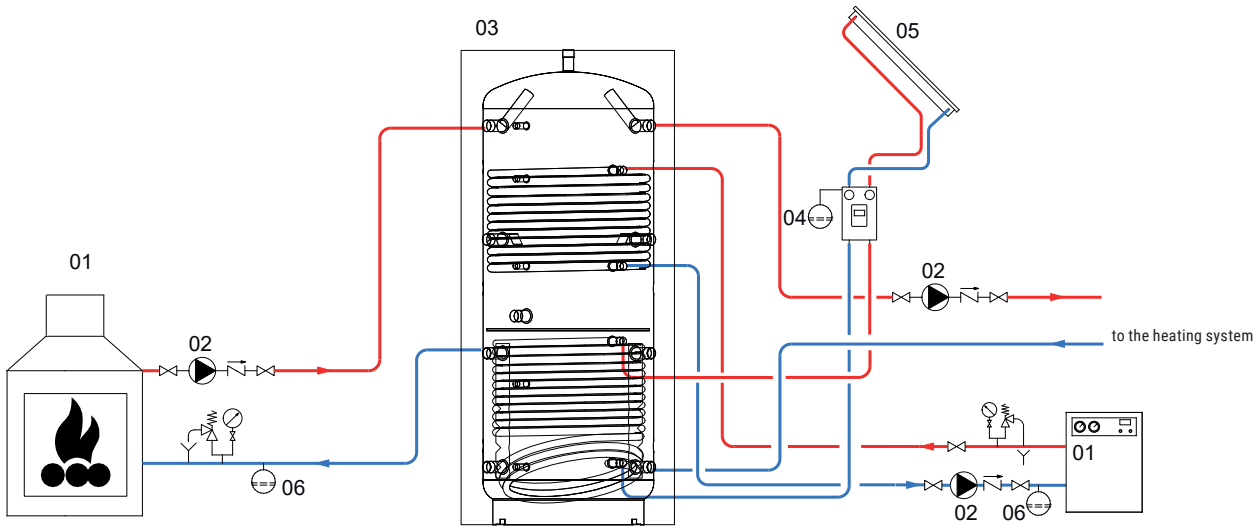

01	Generator	03	Puffer 2	05	Solar panels
02	Heating system circulation group	04	Solar system circulation group	06	Expansion vessel

EXAMPLE OF INSTALLATION WITH CONNECTED **PUFFER 1 CTS® AND CASCADE MACS® MODULES**

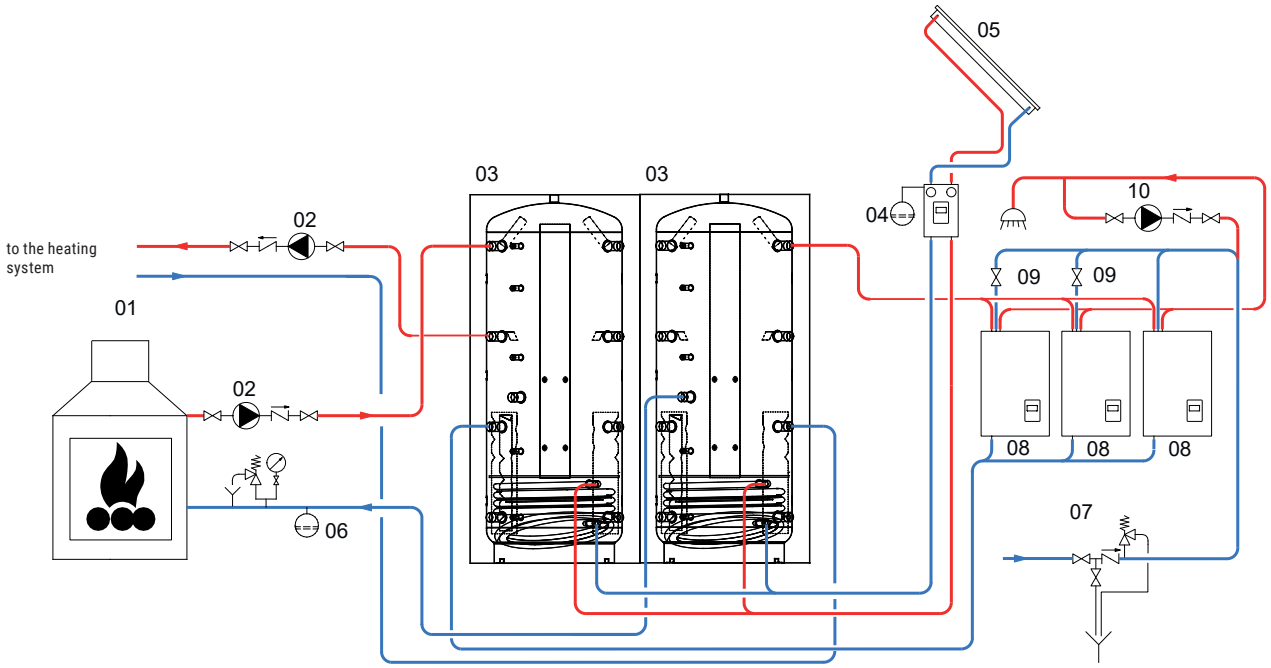

01	Generator	04	Solar system circulation group	07	Hydraulic safety group	10	D.H.W. recirculation group
02	Heating system circulation group	05	Solar panels	08	Cascade MACS® modules		
03	Puffer® 1 CTS	06	Expansion vessel	09	Solenoid valve		

The following schemes are purely illustrative. To realize the installation, always refer to a qualified design engineer.

EXAMPLE OF INSTALLATION WITH **COMBI 1**

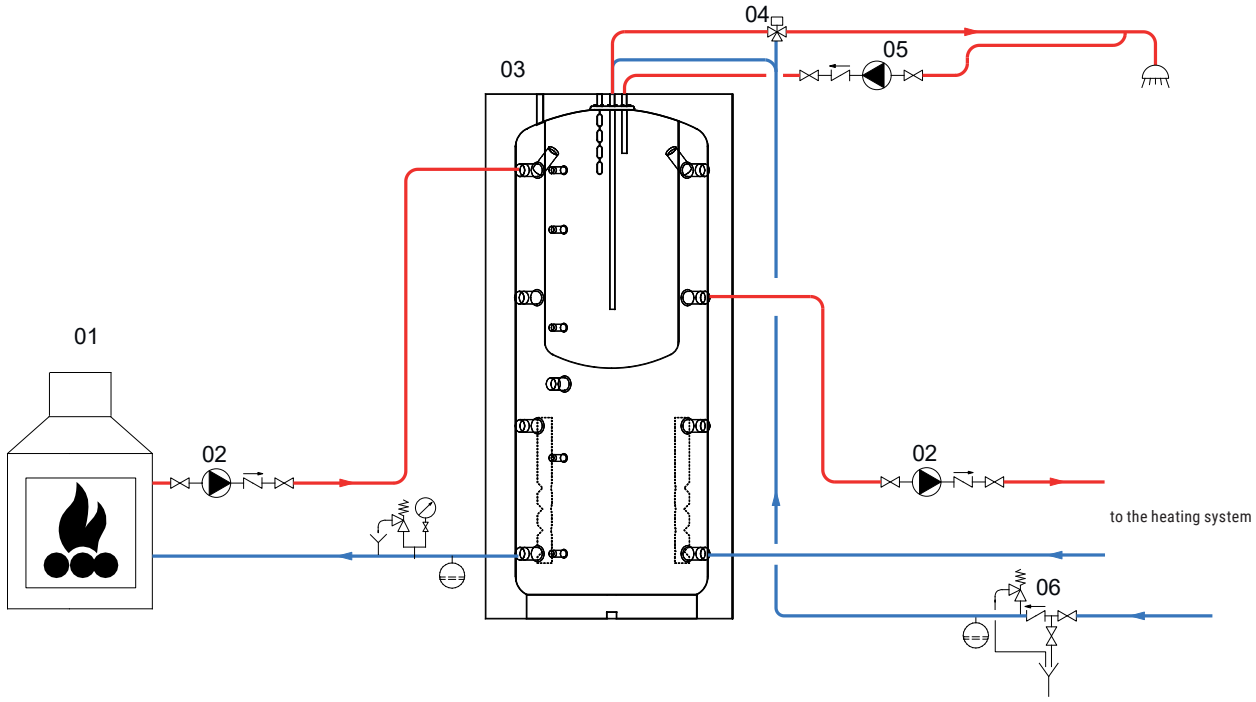

01	Generator	03	Term. Combi 1	05	D.H.W. recirculation group
02	Heating system circulation group	04	Thermostatic mixing valve	06	Hydraulic safety group

EXAMPLE OF INSTALLATION WITH **COMBI 3**

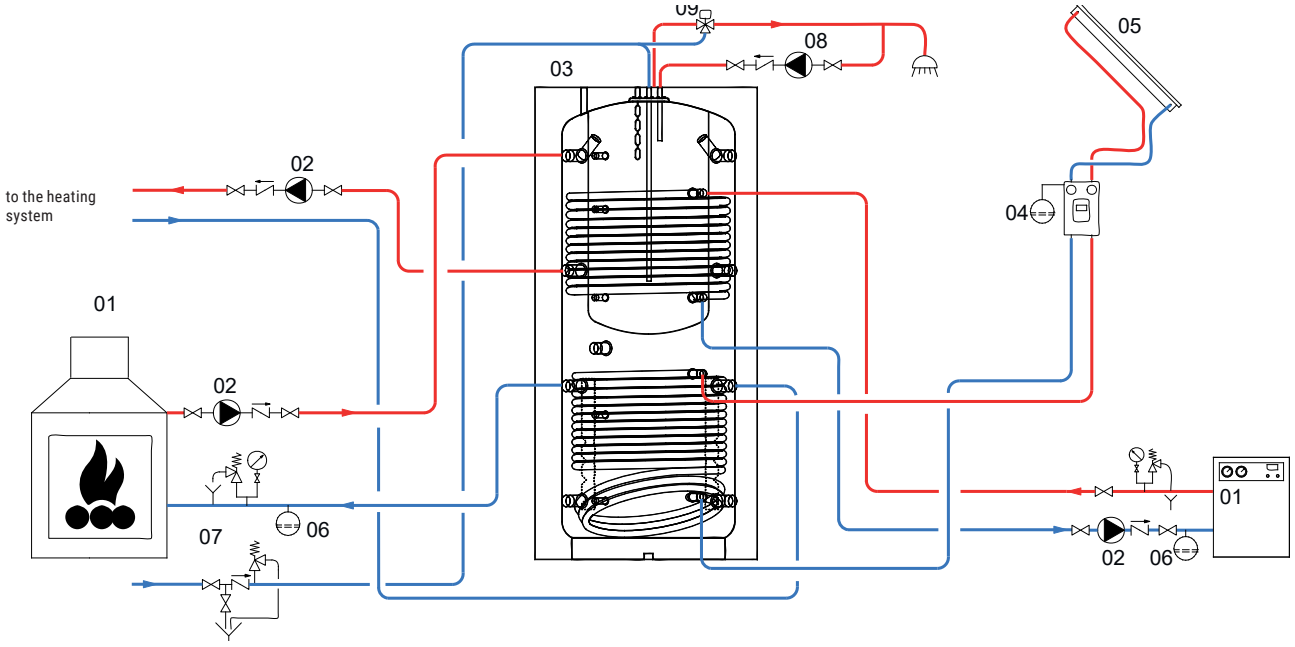

01	Generator	04	Solar system circulation group	07	Hydraulic safety group
02	Heating system circulation group	05	Solar panels	08	D.H.W. recirculation group
03	Combi 3 buffer tank	06	Expansion vessel	09	Thermostatic mixing valve

The following schemes are purely illustrative. To realize the installation, always refer to a qualified design engineer.

EXAMPLES OF INSTALLATION

EXAMPLE OF INSTALLATION WITH **ECO-COMBI 2**

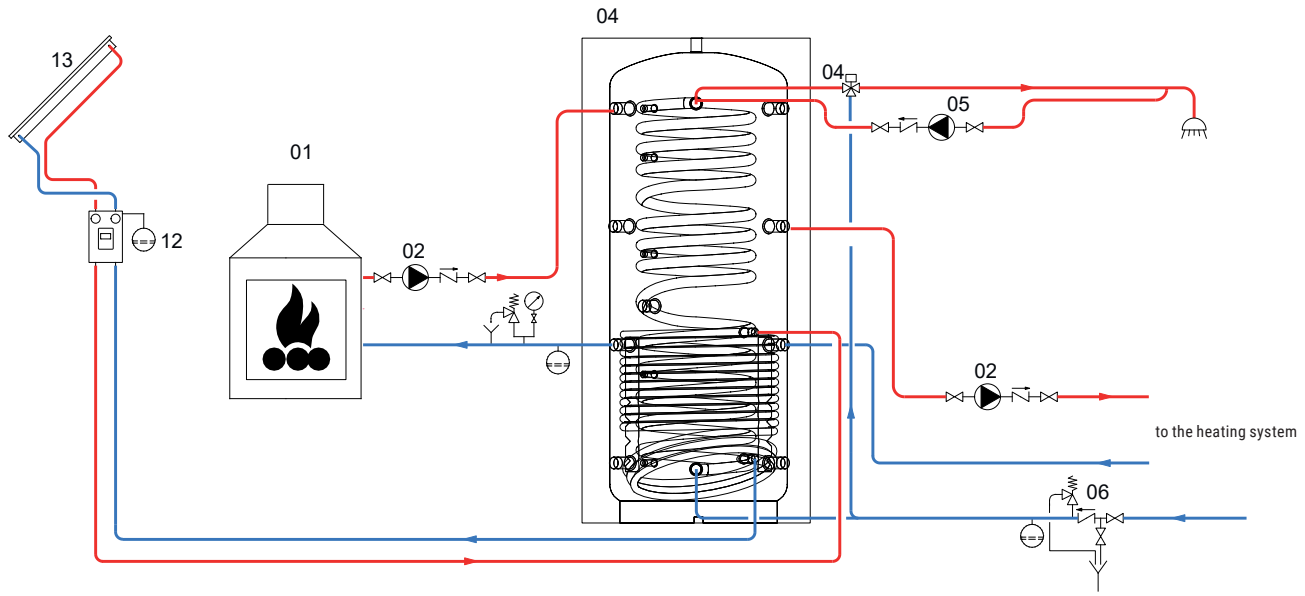

01	Generator	03	Term. Eco Combi 2	05	D.H.W. recirculation group	07	Solar system circulation group
02	Heating system circulation group	04	Thermostatic mixing valve	06	Hydraulic safety group	08	Solar panels

EXAMPLE OF INSTALLATION WITH **PUFFERMAS® 2**

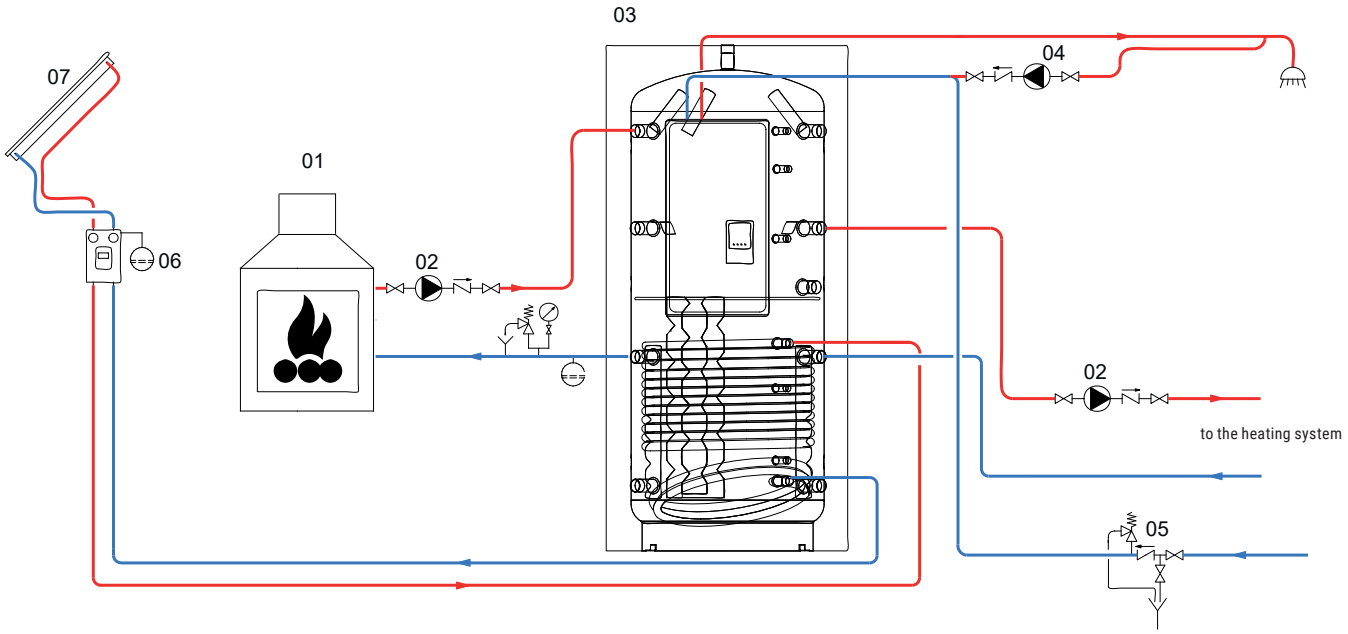

01	Generator	03	PUFFERMAS® 2	05	Hydraulic safety group	07	Solar panels
02	Heating system circulation group	04	D.H.W. recirculation group	06	Solar system circulation group		

The following schemes are purely illustrative. To realize the installation, always refer to a qualified design engineer.

EXAMPLE OF INSTALLATION WITH **PUFFERMAS® 2 CTS** E **ACQUA REFRIGERATA**

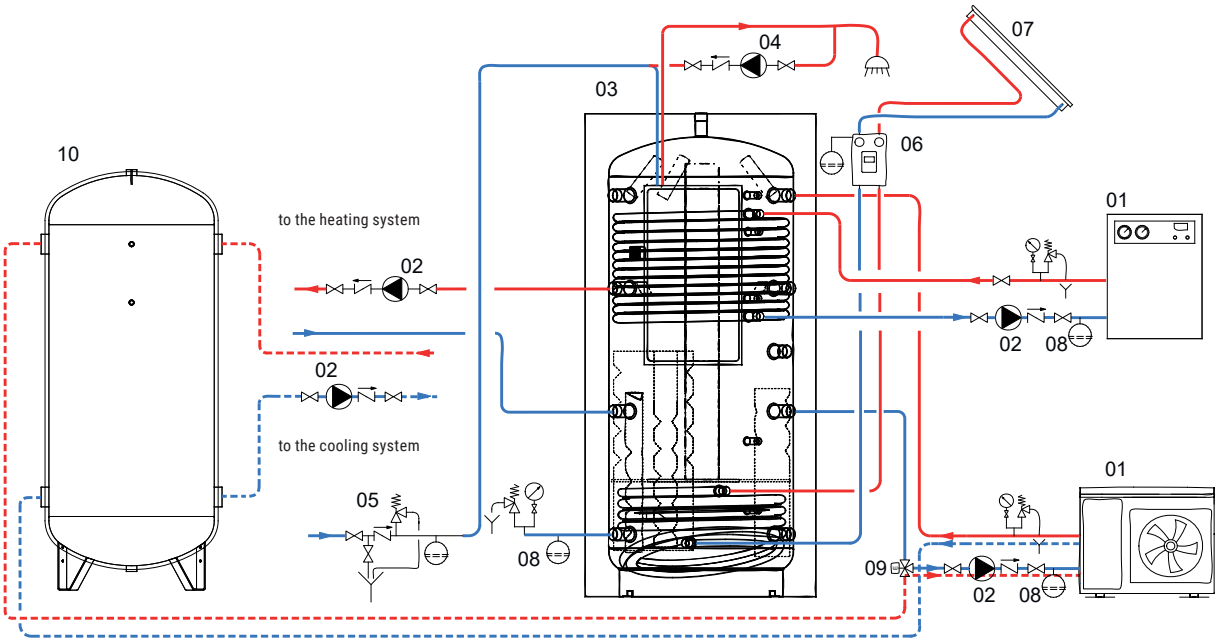

01	Generator	04	D.H.W. recirculation group	07	Solar panels	10	Acqua refrigerata tank
02	Heating system circulation group	05	Hydraulic safety group	08	Expansion vessel		
03	Term. Puerrmas® 3	06	Solar system circulation group	09	Solenoid valve		

IMPIANTO CON **PUFFERMAS® 2 CTS POWER** E **MODULO MST®**

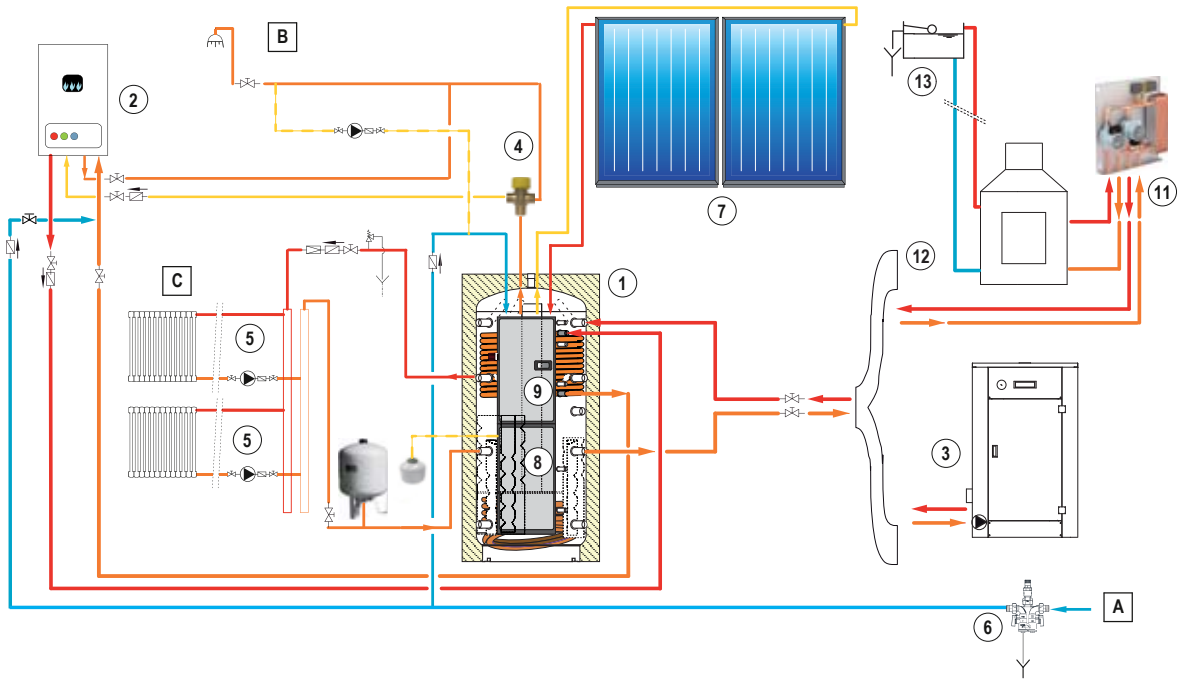

A	Domestic cold water circuit inlet	3	Caldaia a biomassa	8	Gruppo Circulation group solare
B	Domestic hot water users	4	Valvola deviatrice meccanica	9	Modulo MACS® per produzione di ACS
C	Terminals of the thermal installation	5	Gruppo Circulation group	11	Modulo MST®
1	PUFFERMAS® 2 CTS POWER	6	Hydraulic safety group	12	Termocamino
2	Generator a	7	Collettori solari	13	Vaso di espnsione aperto

The following schemes are purely illustrative. To realize the installation, always refer to a qualified design engineer.

EXAMPLES OF INSTALLATION

EXAMPLE OF INSTALLATION WITH **PIASTRATERM®**

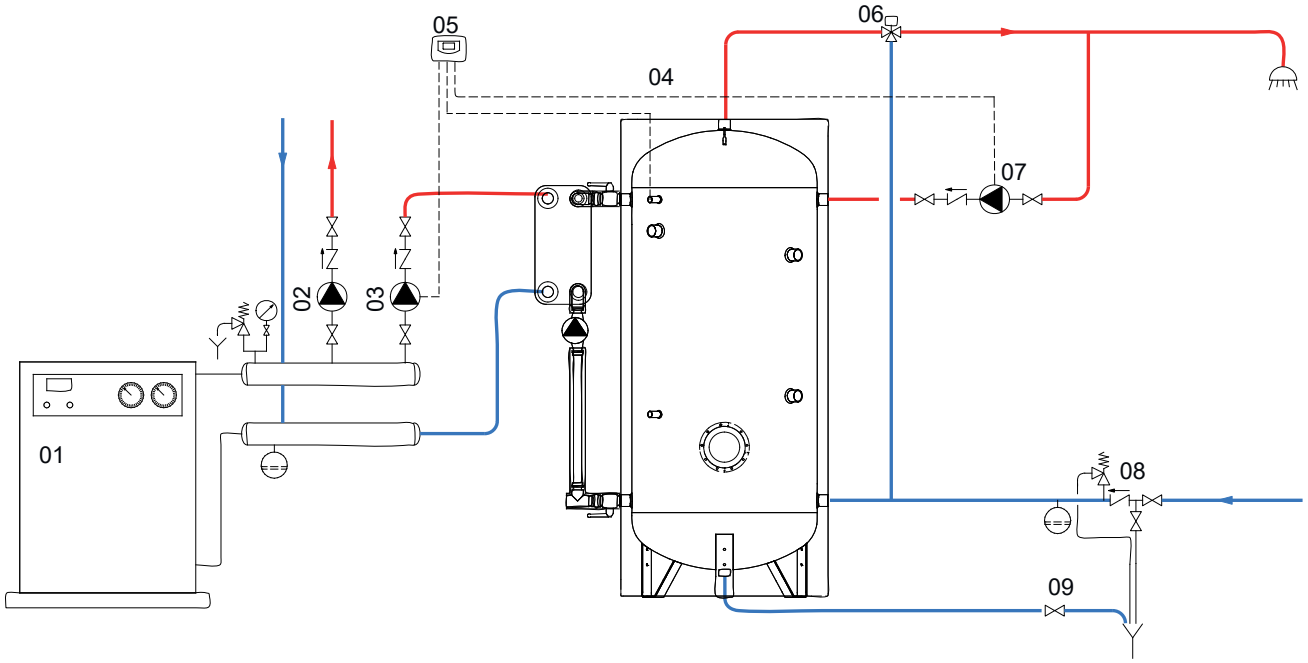

01	Generator	04	PIASTRATERM®	07	D.H.W. recirculation group
02	Heating system circulation group	05	Easy Control display/ thermostat	08	Hydraulic safety group
03	D.H.W. recirculation group	06	Thermostatic mixing valve	09	Blowdown valve

EXAMPLE OF INSTALLATION WITH **VOLANO TERMICO PDC PENSILE**

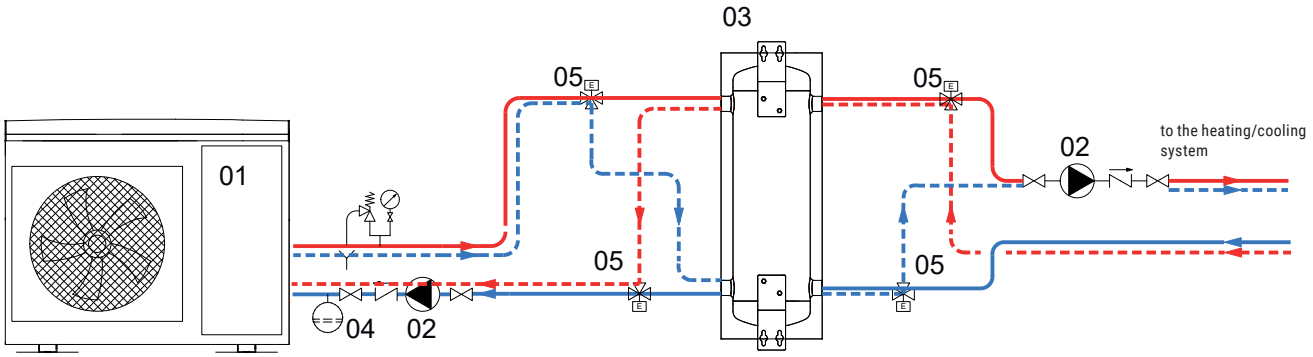

01	Generator	03	Volano Termico PDC pensile	05	3-way valve
02	Air conditioning system circulation group	04	Expansion vessel		

The following schemes are purely illustrative. To realize the installation, always refer to a qualified design engineer.

EXAMPLE OF INSTALLATION WITH **VOLANO TERMICO PDC**

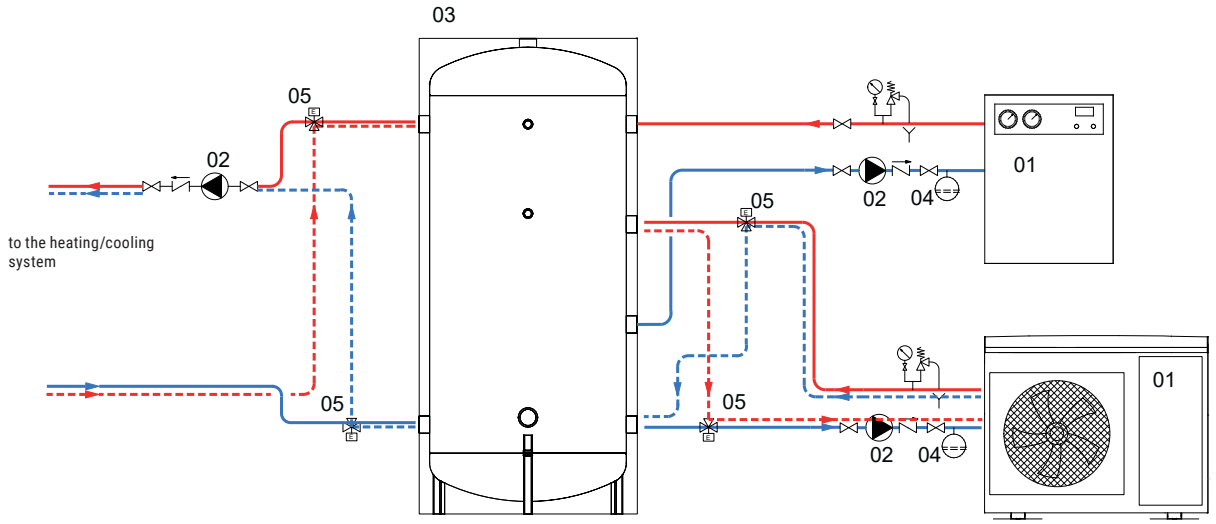

01	Generator	03	Volano Termico PDC	05	3-way valve
02	Circulation group	04	Expansion vessel		

EXAMPLE OF INSTALLATION WITH **ACQUA REFRIGERATA (CHILLED WATER TANK)**

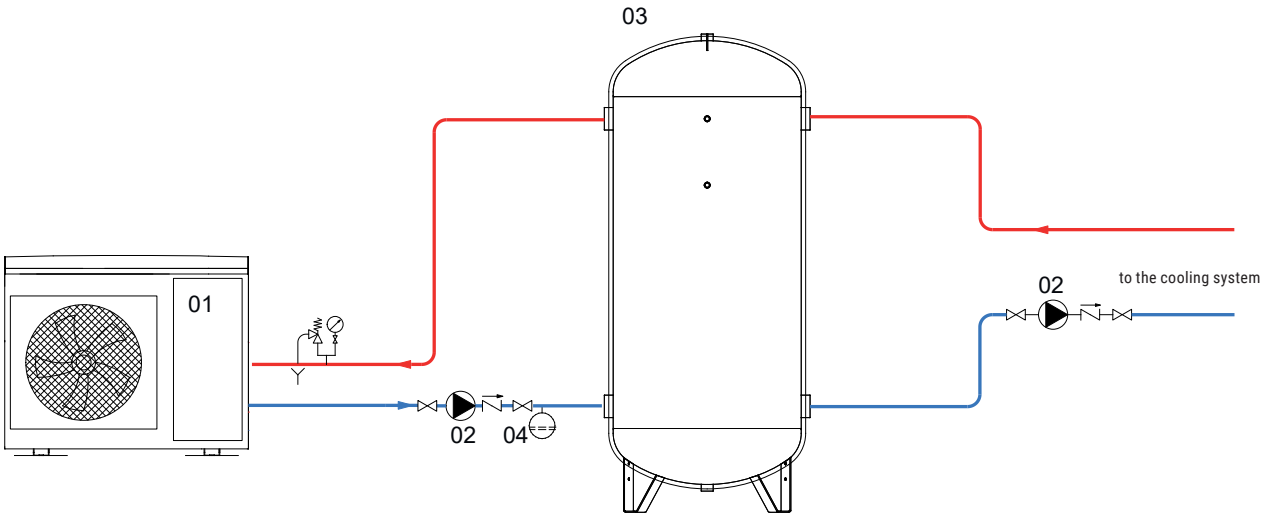

01	Generator	02	Air conditioning system circulation group	03	Acqua Refrigerata (chilled water tank)	04	Expansion vessel

The following schemes are purely illustrative. To realize the installation, always refer to a qualified design engineer.

EXAMPLES OF INSTALLATION

EXAMPLE OF INSTALLATION WITH **ECO-COMBI 3 PDC**

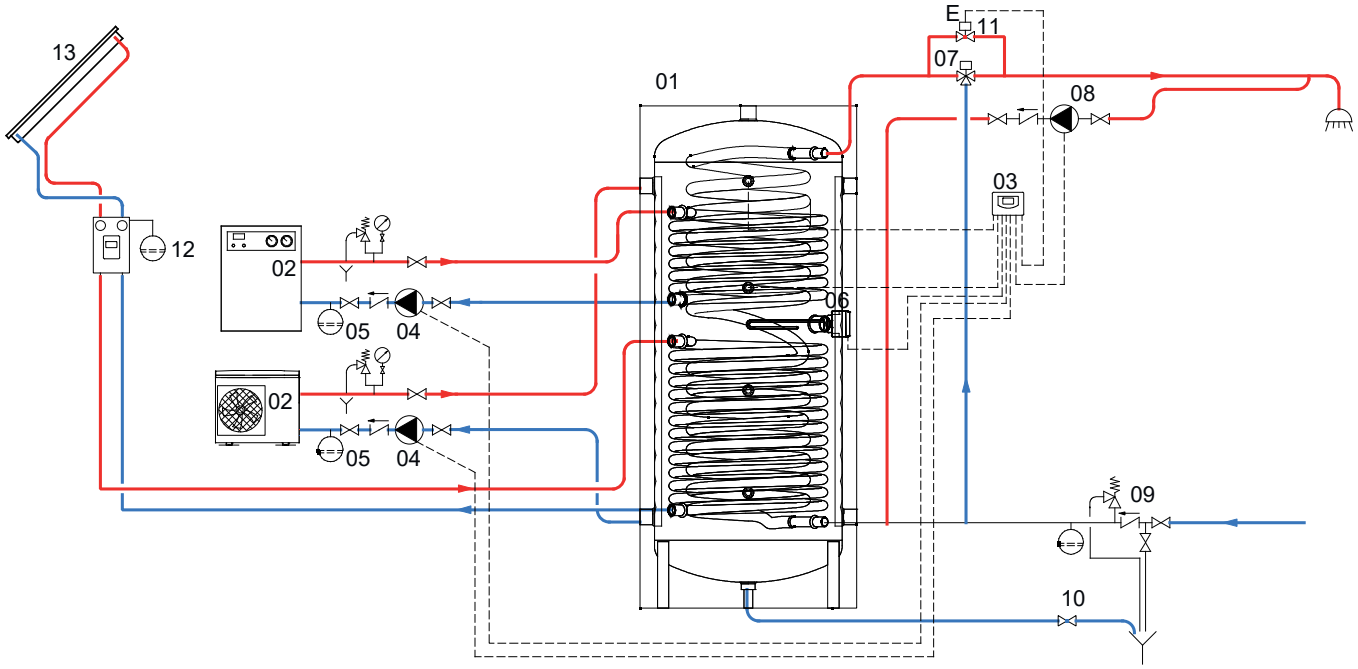

01	Term. Eco Combi 3 PDC	05	Expansion vessel	09	Hydraulic safety group	13	Solar panels
02	Generator	06	Electric immersion heater (optional)	10	Blowdown valve		
03	Easy Control electronic display/ thermostat	07	Thermostatic mixing valve	11	By-pass solenoid valve		
04	Circulation group	08	D.H.W. recirculation group	12	Solar system circulation group		

EXAMPLE OF INSTALLATION WITH **ECO-COMBI 2 PDC**

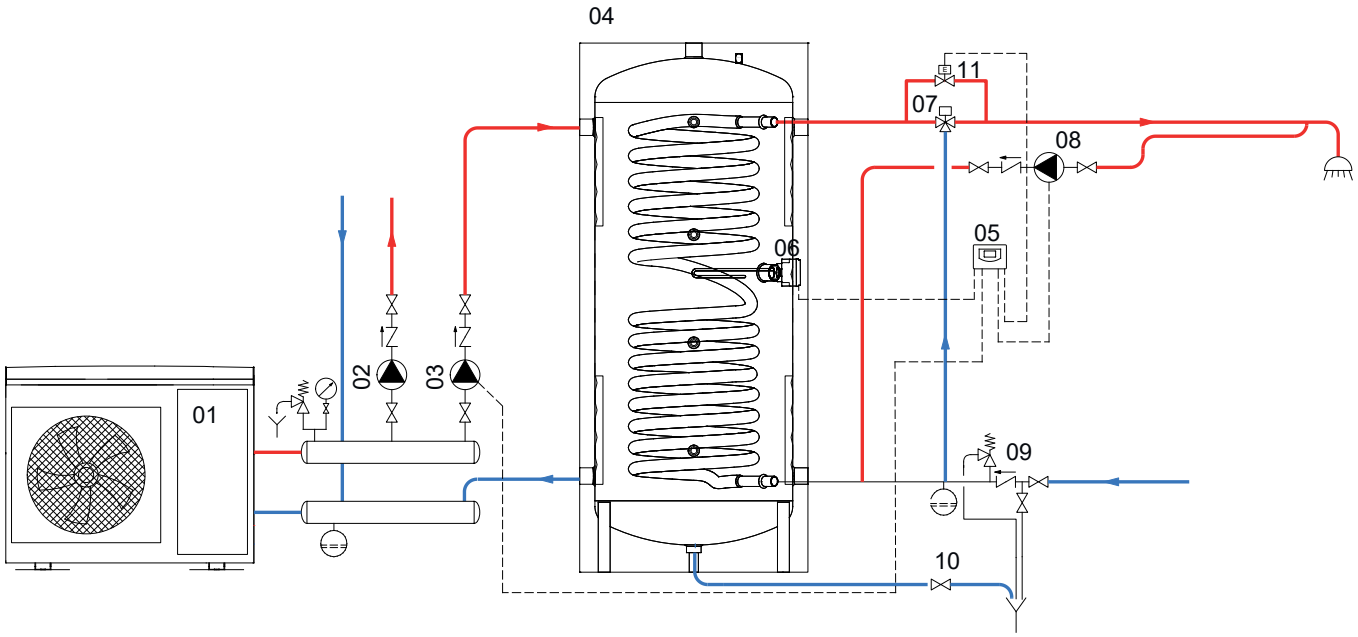

01	Generator (Heat pump)	04	Term. Eco Combi 1 PDC	07	Thermostatic mixing valve	10	Blowdown valve
02	Heating system circulation group	05	Easy Control electronic display/ thermostat	08	D.H.W. recirculation group	11	By-pass solenoid valve
03	D.H.W. circulation group	06	Electric immersion heater (optional)	09	Hydraulic safety group		

The following schemes are purely illustrative. To realize the installation, always refer to a qualified design engineer.

EXAMPLE OF INSTALLATION WITH **PUFFERMAS® 2 CTS**

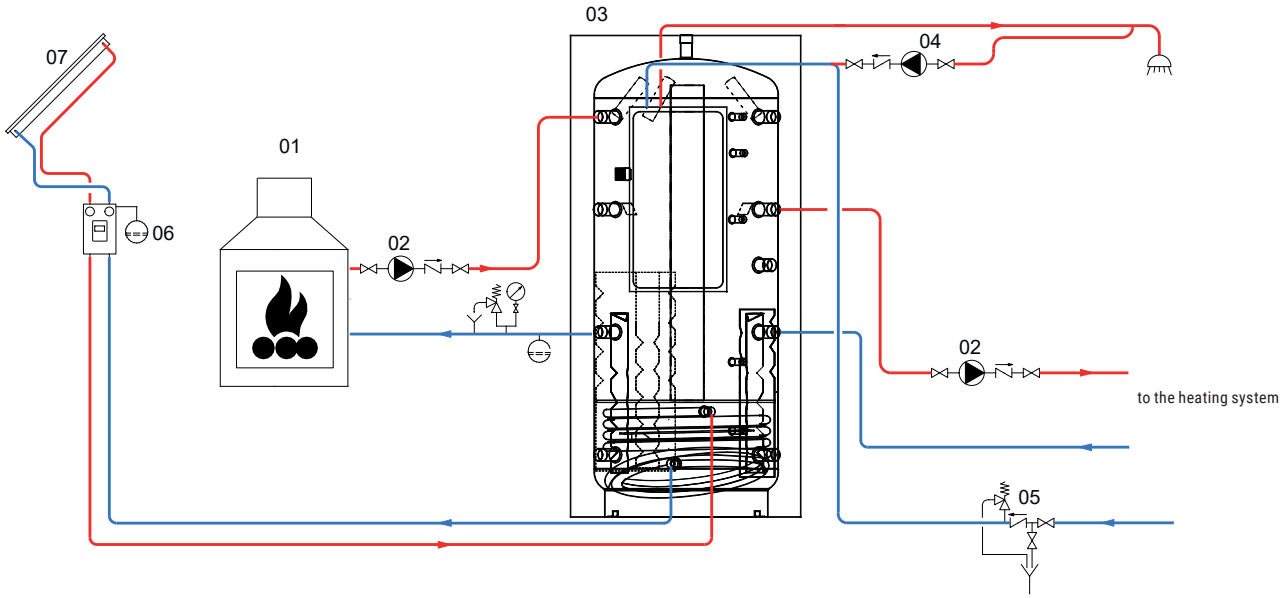

01	Generator	03	Term. Puffermas 2 CTS	05	Hydraulic safety group	07	Solar panels
02	Heating system circulation group	04	D.H.W. recirculation group	06	Solar system circulation group		

EXAMPLE OF INSTALLATION WITH **PUFFERMAS® 2 CTS POWER**

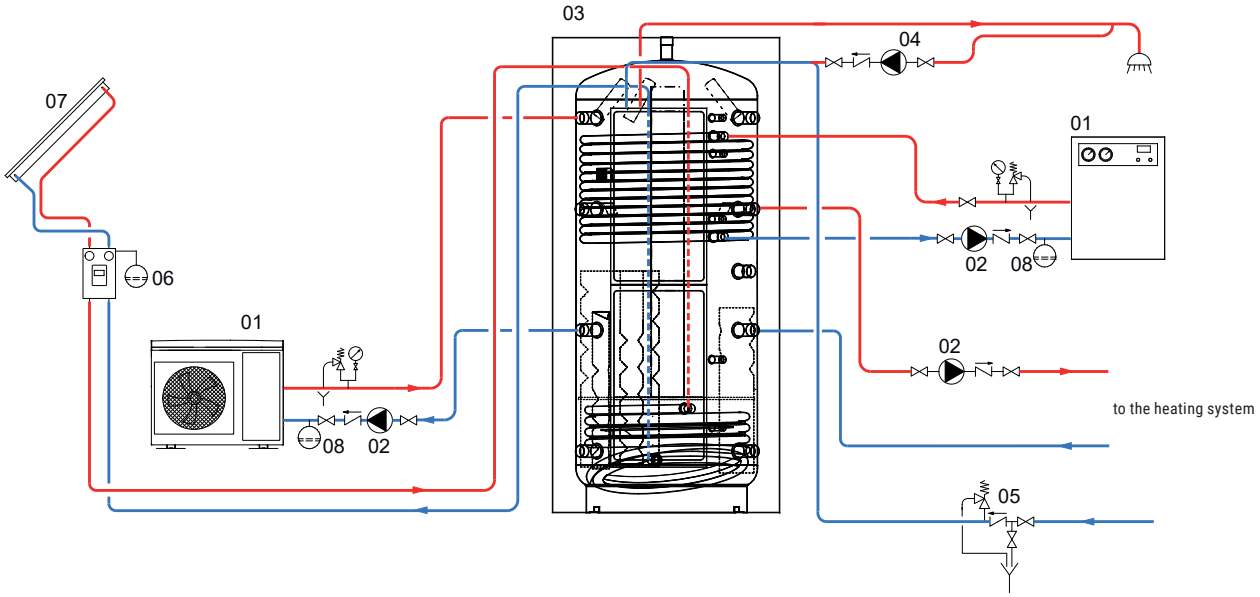

01	Generator	03	Term. Puffermas 3 CTS POWER	05	Hydraulic safety group	07	Solar panels
02	Heating system circulation group	04	D.H.W. recirculation group	06	Solar system circulation group	08	Expansion vessel

The following schemes are purely illustrative. To realize the installation, always refer to a qualified design engineer.

EXAMPLES OF INSTALLATION

EXAMPLE OF INSTALLATION WITH **BOLLY® 3 PDC**

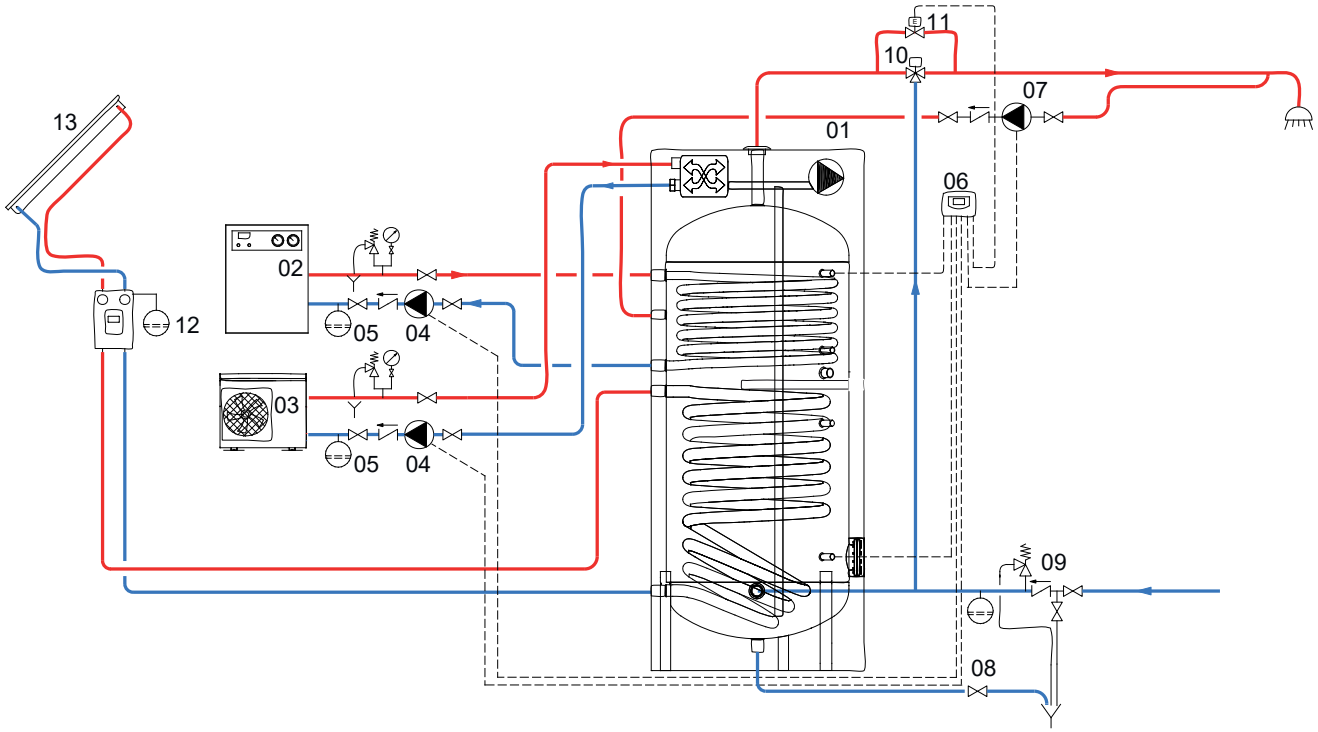

01	BOLLY® 3 PDC	05	Expansion vessel	09	Hydraulic safety group	13	Solar panels
02	Generator	06	Easy Control electronic display/ thermostat	10	Thermostatic mixing valve		
03	Heat pump	07	D.H.W. recirculation group	11	By-pass solenoid valve		
04	Circulation group	08	Blowdown valve	12	Solar system circulation group		

EXAMPLE OF INSTALLATION WITH **BOLLY® 2 XL INOX**

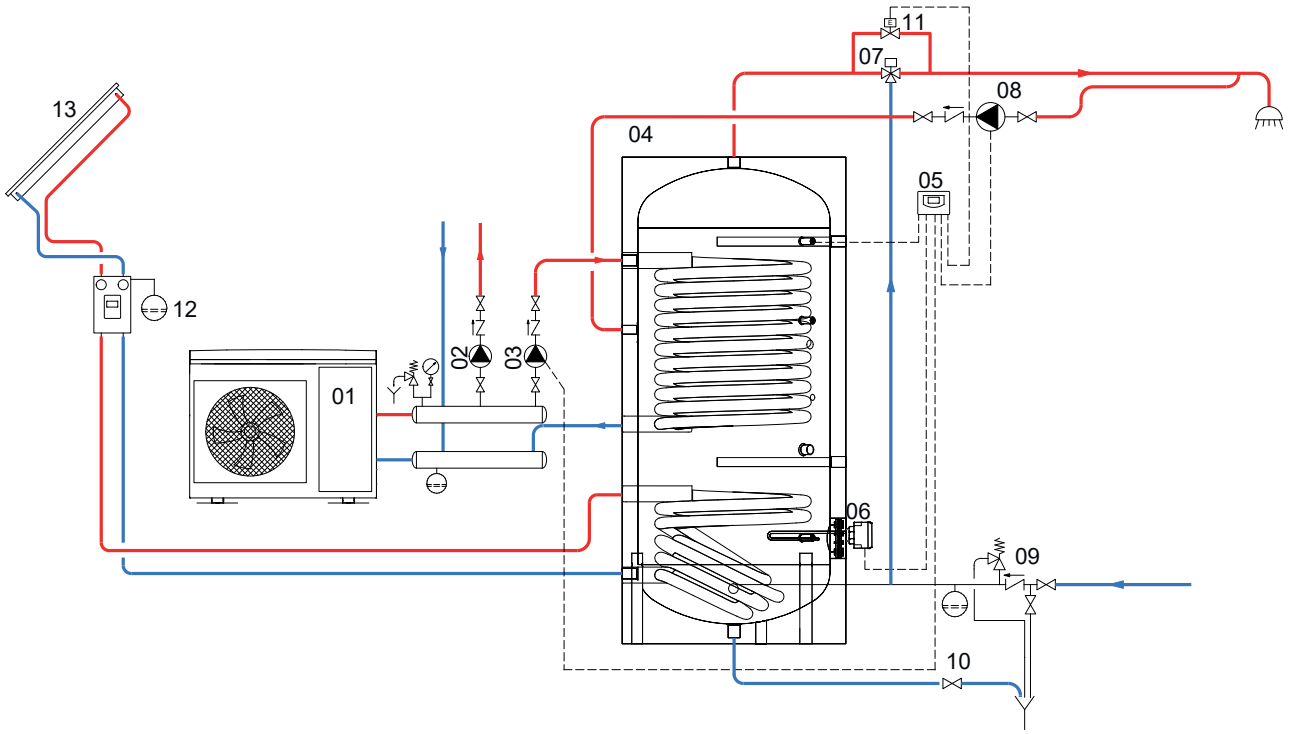

01	Generator (Heat pump)	05	Easy Control electronic display/ thermostat	09	Hydraulic safety group	13	Solar panels
02	Heating system circulation group	06	Electric immersion heater (optional)	10	Blowdown valve		
03	D.H.W. circulation group	07	Thermostatic mixing valve	11	By-pass solenoid valve		
04	Bolly XL	08	D.H.W. recirculation group	12	Solar system circulation group		

The following schemes are purely illustrative. To realize the installation, always refer to a qualified design engineer.

EXAMPLE OF INSTALLATION WITH **EXTRA 1**

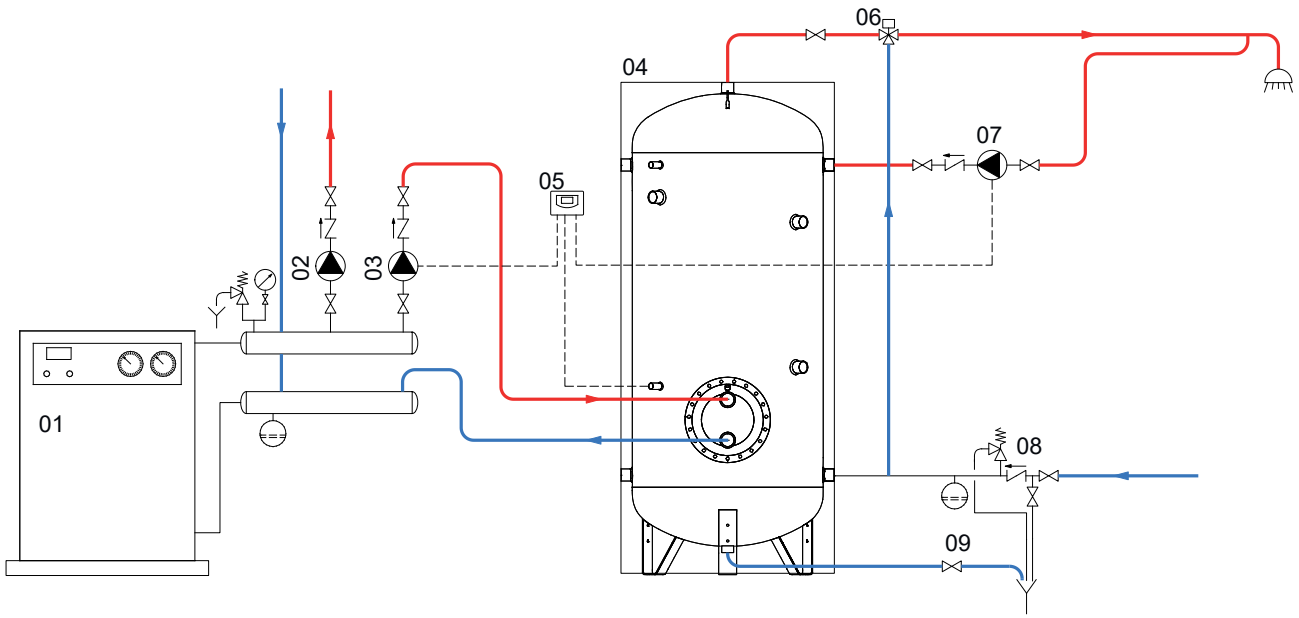

1	Generator	4	EXTRA 1	7	DHW recirculation group
2	Heating system circulation group	5	Easy Control electronic display/ thermostat	8	Hydraulic safety group
3	D.H.W. circulation group	6	Thermostatic mixing valve	9	Blowdown valve

EXAMPLE OF INSTALLATION WITH **EXTRA 2**

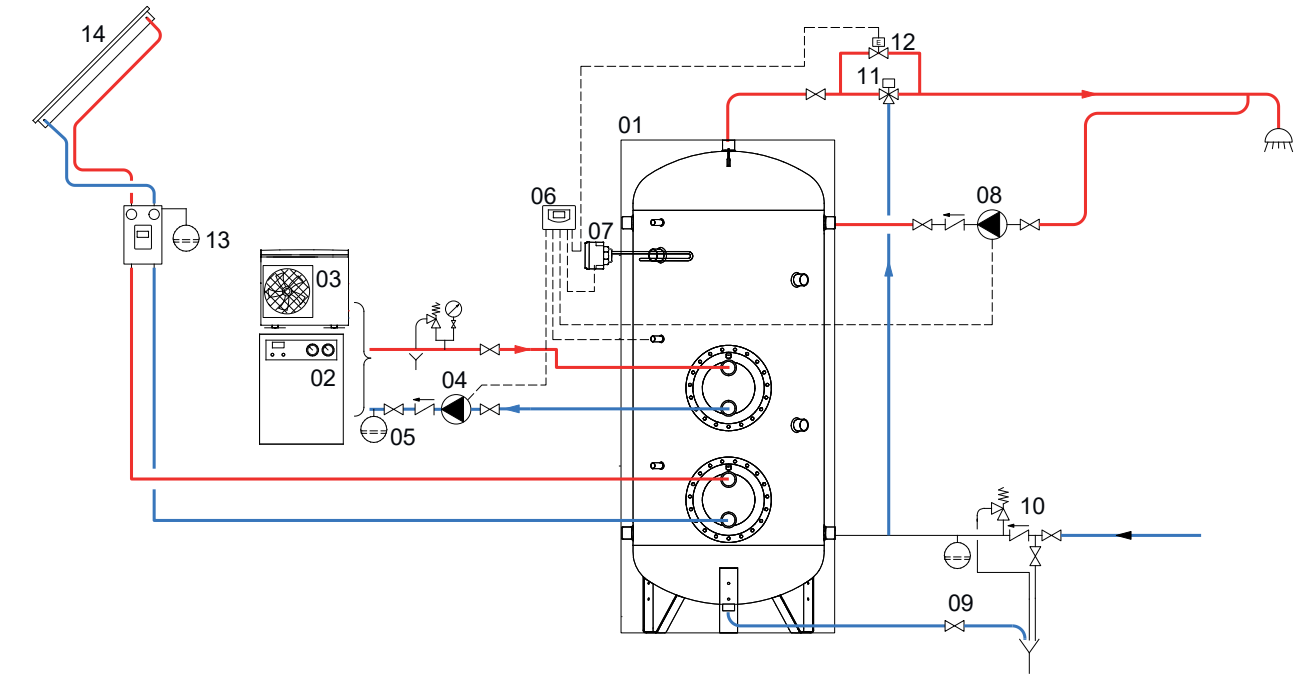

1	Extra 2	5	Expansion vessel	9	Blowdown valve	13	Solar system circulation group
2	generator	6	Easy Control electronic display/ thermostat	10	Hydraulic safety group	14	Solar panels
3	Heat pump generator	7	Electric immersion heater (optional)	11	Thermostatic mixing valve		
4	Circulation group	8	DHW recirculation group	12	By-pass solenoid valve		

The following schemes are purely illustrative. To realize the installation, always refer to a qualified design engineer.

EXAMPLES OF INSTALLATION

EXAMPLE OF INSTALLATION WITH **PHC EXCHANGERS AND SOLAR THERMAL SYSTEM FOR SWIMMING POOL HEATING**

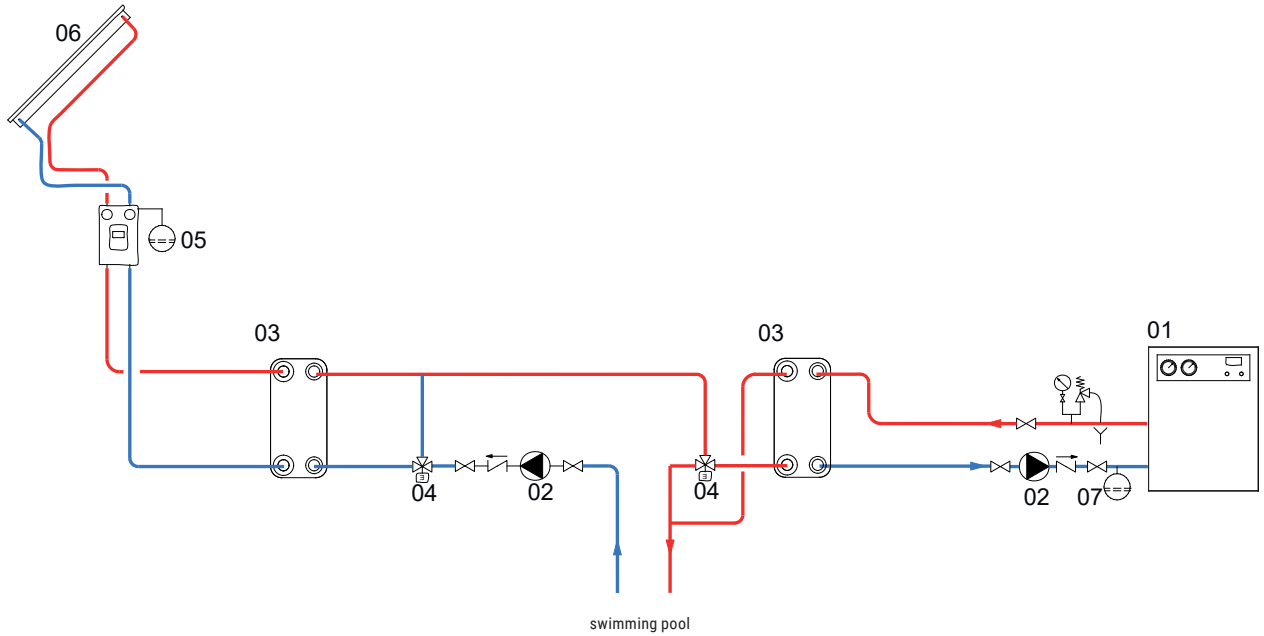

01	Generator	03	PHC heat exchanger	05	D.H.W. recirculation group	07	Expansion vessel
02	Heating system circulation group	04	3-way valve	06	Solar panels	08	

EXAMPLE OF INSTALLATION WITH **EXTRA 2**

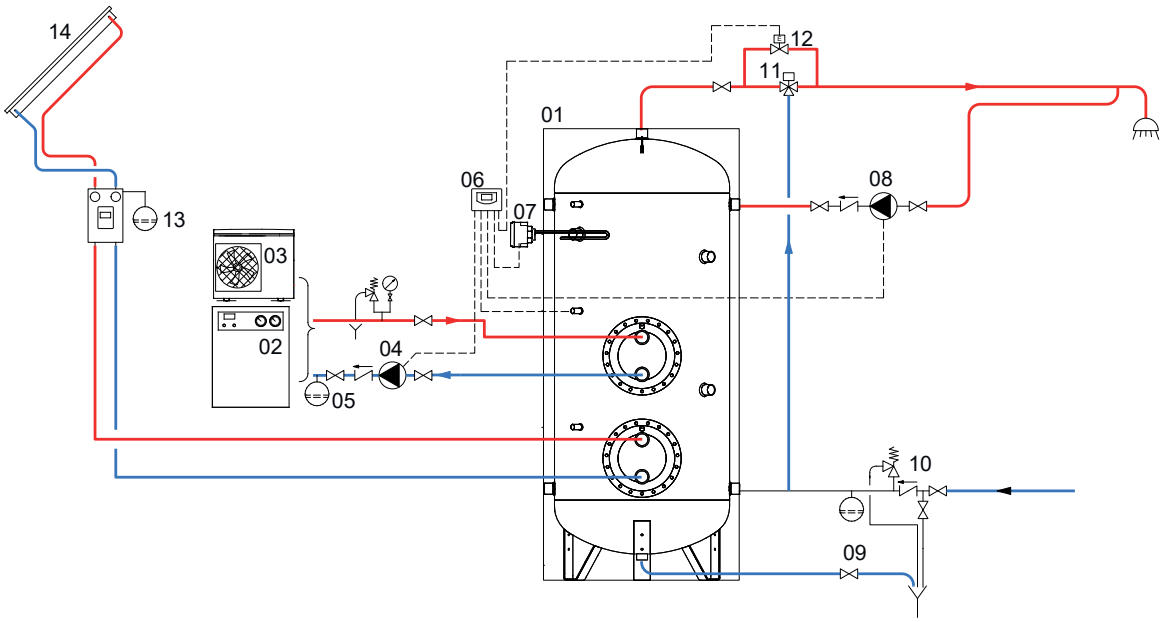

1	Extra 2	5	Expansion vessel	9	Blowdown valve	13	Solar system circulation group
2	generator	6	Easy Control electronic display/ thermostat	10	Hydraulic safety group	14	Solar panels
3	Heat pump generator	7	Electric immersion heater (optional)	11	Thermostatic mixing valve		
4	Circulation group	8	DHW recirculation group	12	By-pass solenoid valve		

The following schemes are purely illustrative. To realize the installation, always refer to a qualified design engineer.

EXAMPLE OF INSTALLATION WITH **PUFFERMAS® 3 CTS POWER**

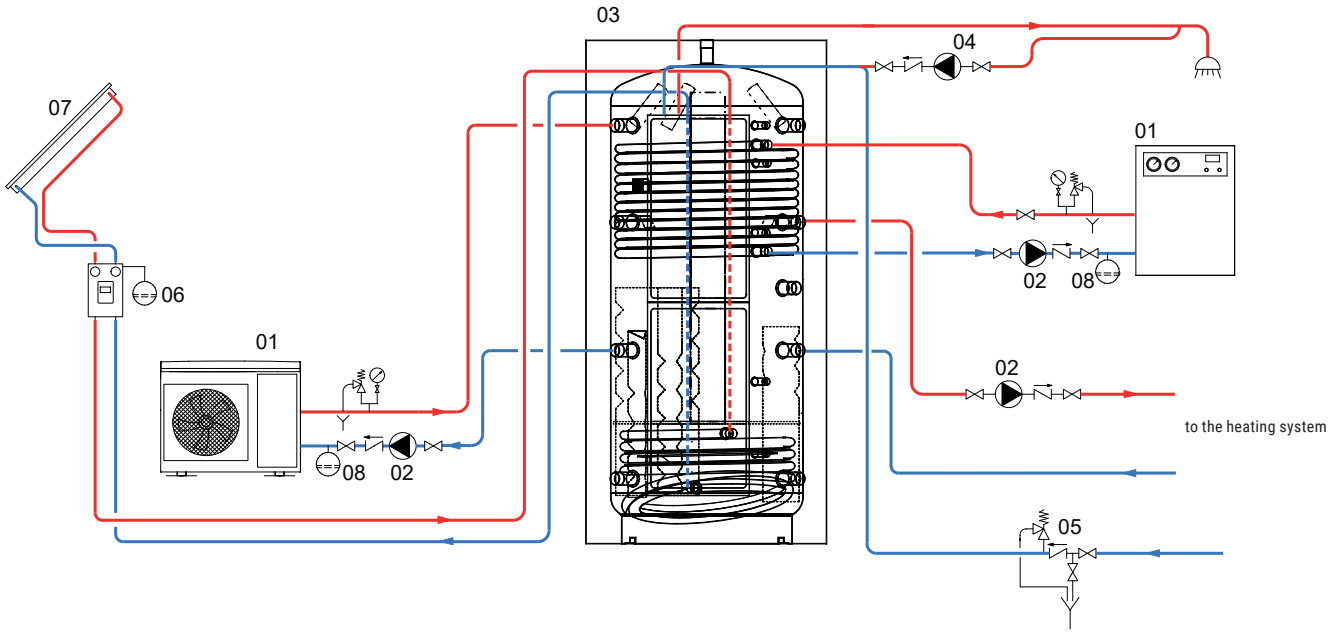

01	Generator	03	Term. Puffermas 3 CTS POWER	05	Hydraulic safety group	07	Solar panels
02	Heating system circulation group	04	D.H.W. recirculation group	06	Solar system circulation group	08	Expansion vessel

EXAMPLE OF INSTALLATION WITH **VASO INERZIALE A1**

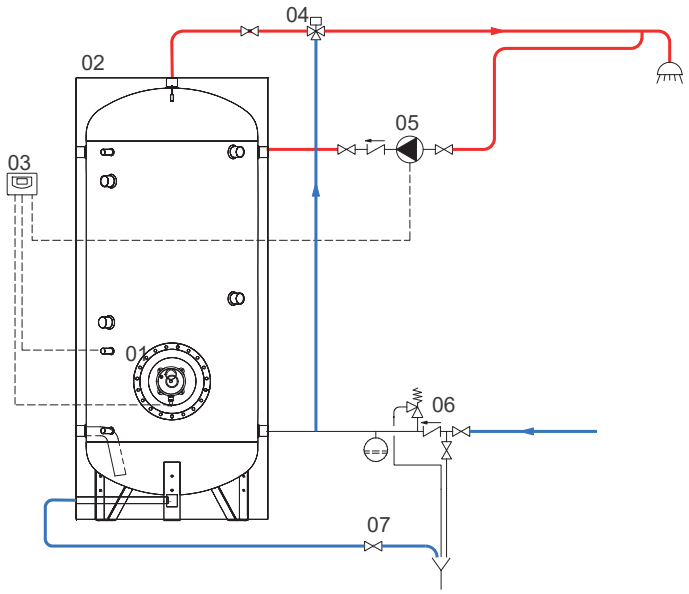

01	Generator	03	Easy Control electronic display/thermostat	05	DHW Circulation group	07	Blowdown valve
02	VASO INERZIALE A1	04	Thermostatic mixing valve	06	Hydraulic safety group		

The following schemes are purely illustrative. To realize the installation, always refer to a qualified design engineer.

EXAMPLES OF INSTALLATION

EXAMPLE OF INSTALLATION WITH **MODULO PRS** - FOR DHW ACCUMULATION

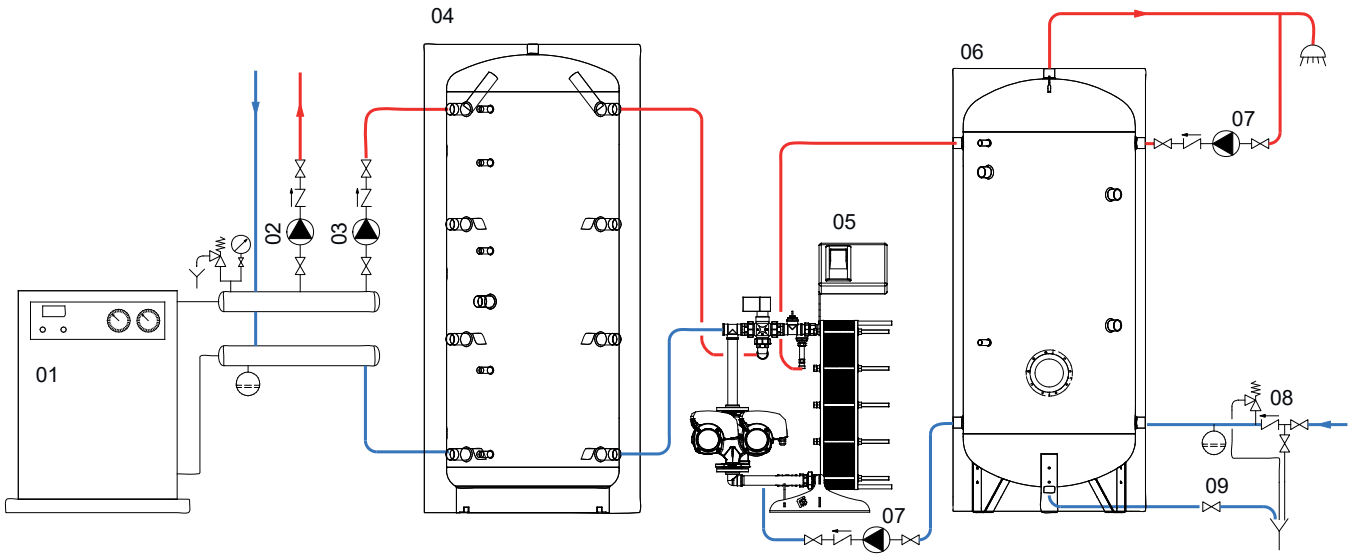

01	Generator	04	PUFFER (Inertial tank)	07	D.H.W. recirculation group
02	Heating system circulation group	05	PRS Module	08	Hydraulic safety group
03	Primary circulation group	06	VASO INERZIALE	09	Blowdown valve

EXAMPLE OF INSTALLATION WITH **MODULO PRS** - FOR DHW ACCUMULATION

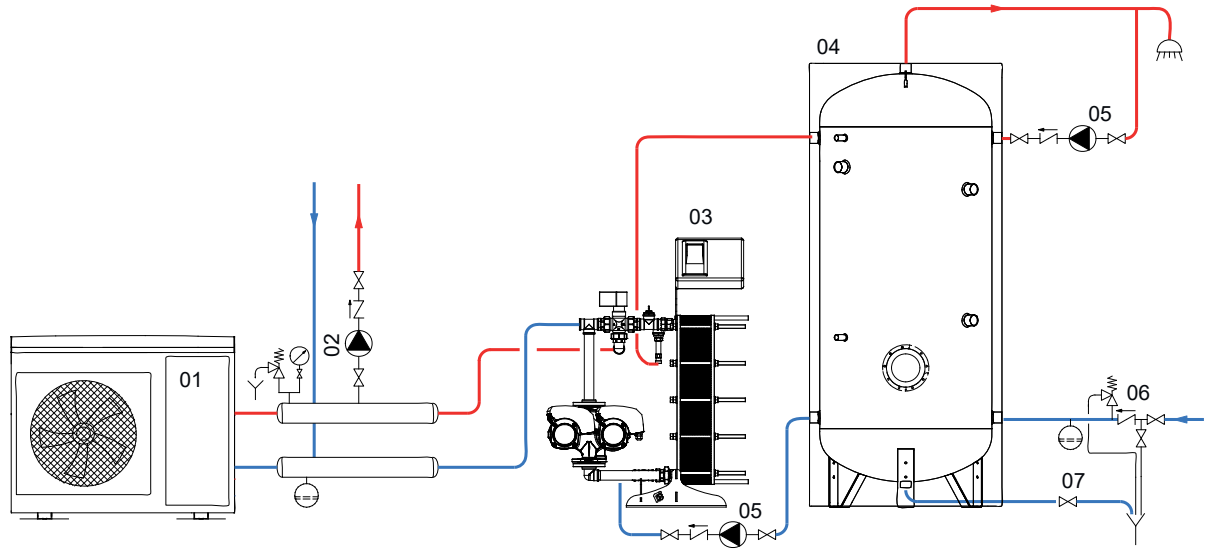

01	Generator	04	VASO INERZIALE	07	Blowdown valve
02	Heating system circulation group	05	D.H.W. recirculation group		
03	PRS Module	06	Hydraulic safety group		

The following schemes are purely illustrative. To realize the installation, always refer to a qualified design engineer.

EXAMPLE OF INSTALLATION WITH **MODULO PRS** - WITHOUT DHW ACCUMULATION

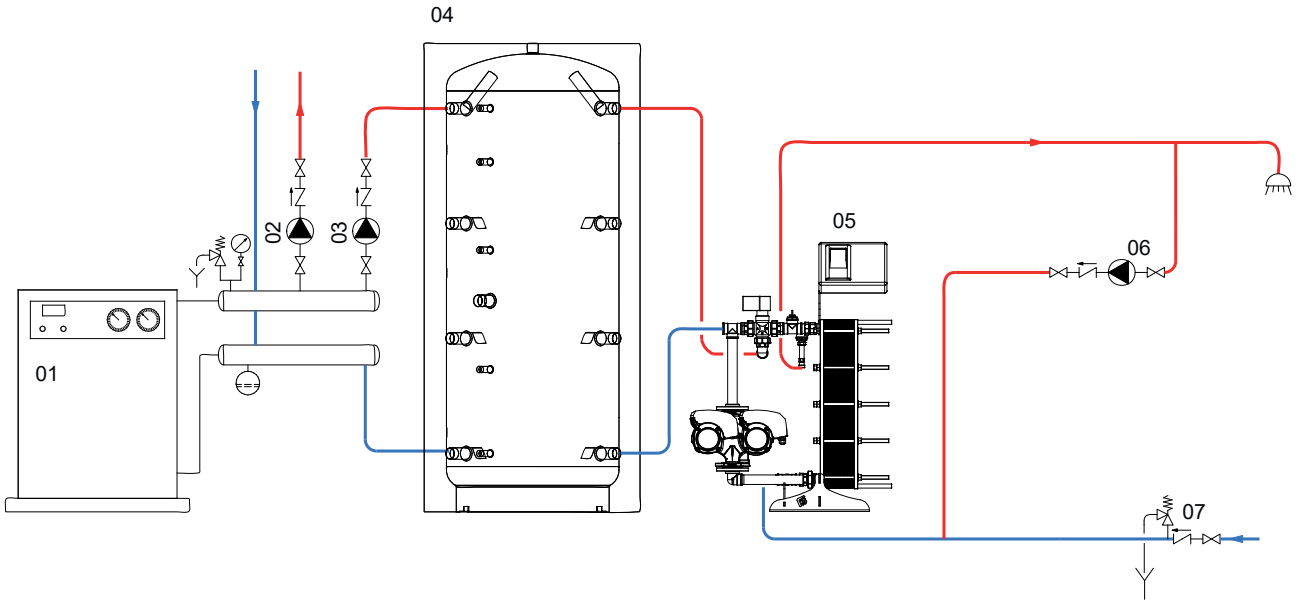

01	Generator	03	Primary circulation group	05	PRS Module	07	Hydraulic safety group
02	Heating system circulation group	04	PUFFER (Inertial tank)	06	D.H.W. recirculation group		

EXAMPLE OF INSTALLATION WITH **VOLANO TERMICO**

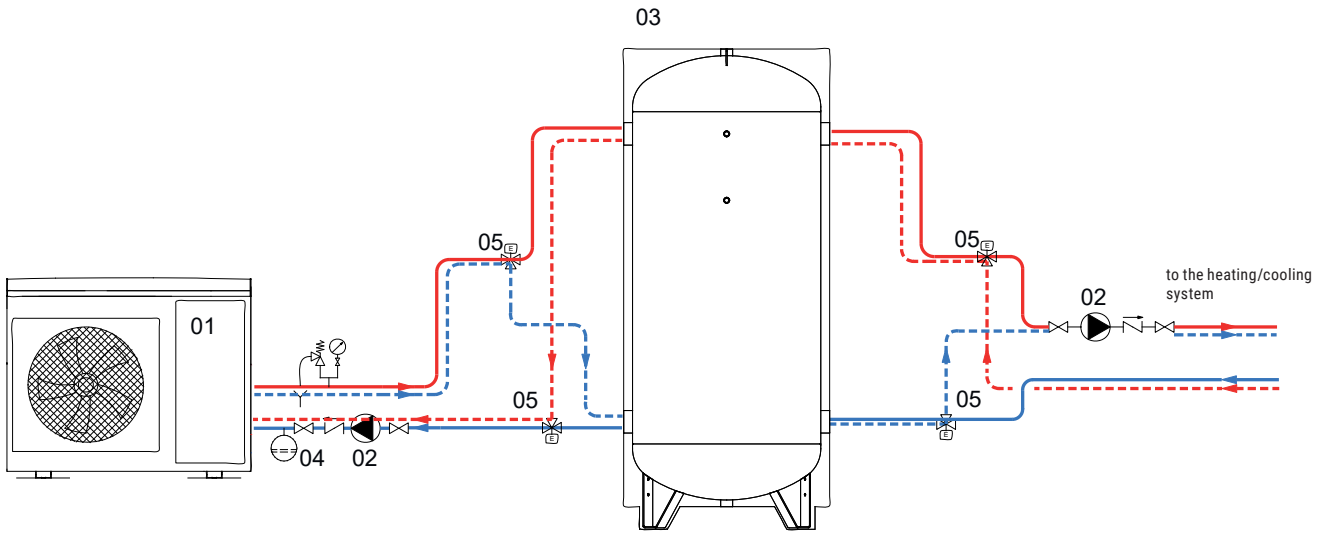

01	Generator	03	VOLANO TERMICO	05	3-way valve
02	Cooling system circulation group	04	Expansion vessel		

The following schemes are purely illustrative. To realize the installation, always refer to a qualified design engineer.

HEAT EXCHANGER OUTPUT CHARTS

EXTRA PLUS CALORIFIERS HEAT EXCHANGER OUTPUT REFERRED TO TEMPERATURE AND FLOW RATE OF PRIMARY AND SECONDARY 10/45°C AT MAXIMUM WITHDRAWAL OF PRODUCIBLE DHW (UPPER LIMIT OF THE CURVES REFERRED TO MAXIMUM PRIMARY FLOW RATE IN THE HEAT EXCHANGER, WHILE THE LOWER LIMIT IN THE CURVES REFER TO THE MINIMUM PRIMARY FLOW RATE).

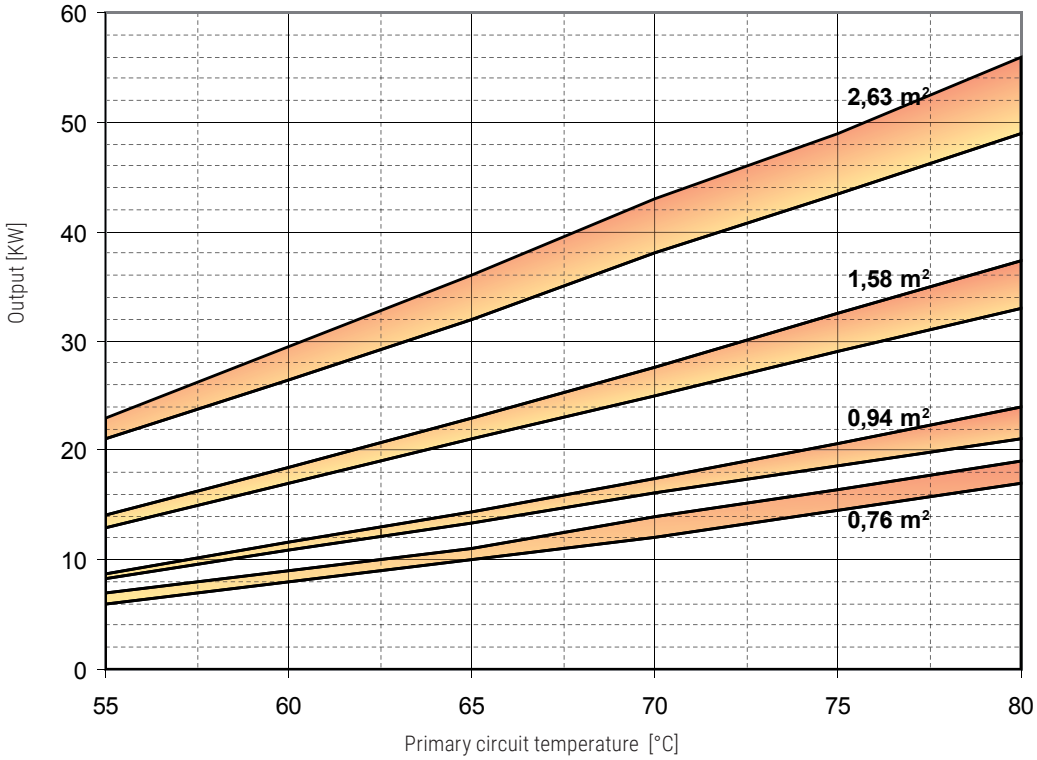

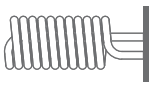

EXTRA PLUS

Heat exchanger surface	0,76 m²		0,94 m²		1,58 m²		2,63 m²	
Flow rate [m³/h]	MAX	MIN	MAX	MIN	MAX	MIN	MAX	MIN
	1,4	0,7	1,4	0,7	1,4	0,7	1,4	0,7

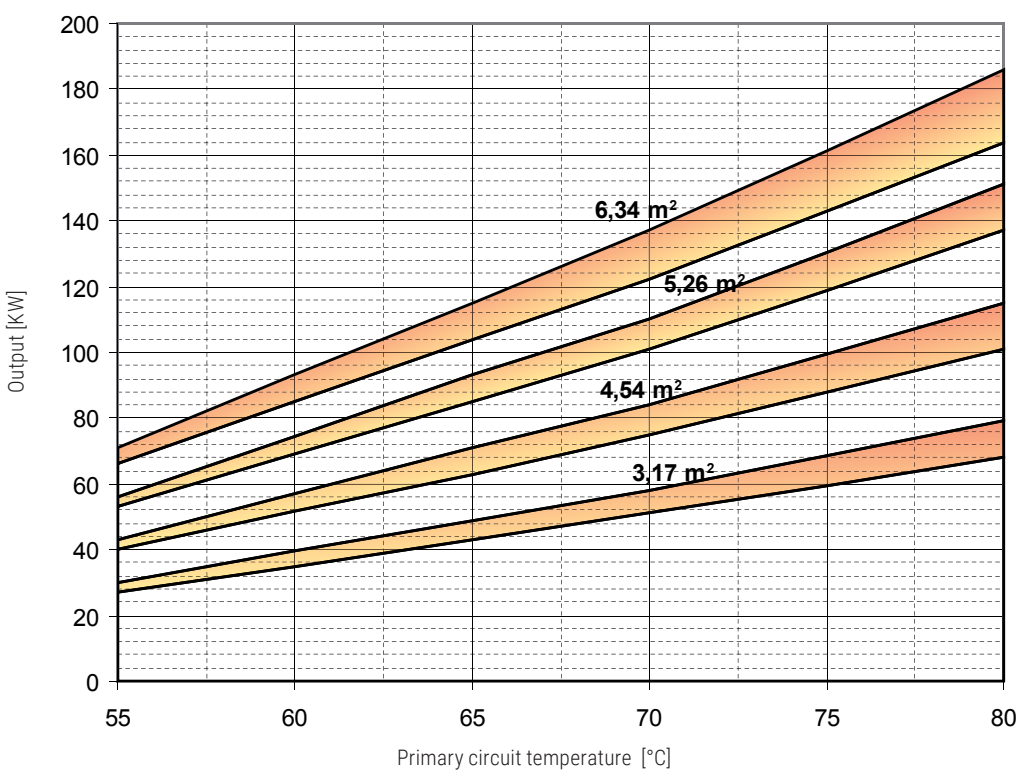

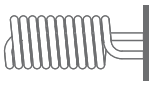

EXTRA PLUS

Heat exchanger surface	3,17 m²		4,54 m²		5,26 m²		6,34 m²	
Flow rate [m³/h]	MAX	MIN	MAX	MIN	MAX	MIN	MAX	MIN
	1,4	0,7	3	1,5	3	1,5	3	1,5

HEAT EXCHANGER OUTPUT CHARTS

EXTRA HEAT EXCHANGER OUTPUT REFERRED TO TEMPERATURE AND FLOW RATE OF PRIMARY CIRCUIT AND WITH SECONDARY AT 10/45°C AT MAXIMUM WITHDRAWAL OF PRODUCIBLE DHW (UPPER LIMIT OF THE CURVES REFERRED TO MAXIMUM PRIMARY FLOW RATE IN THE HEAT EXCHANGER, WHILE THE LOWER LIMIT IN THE CURVES REFER TO THE MINIMUM PRIMARY FLOW RATE)

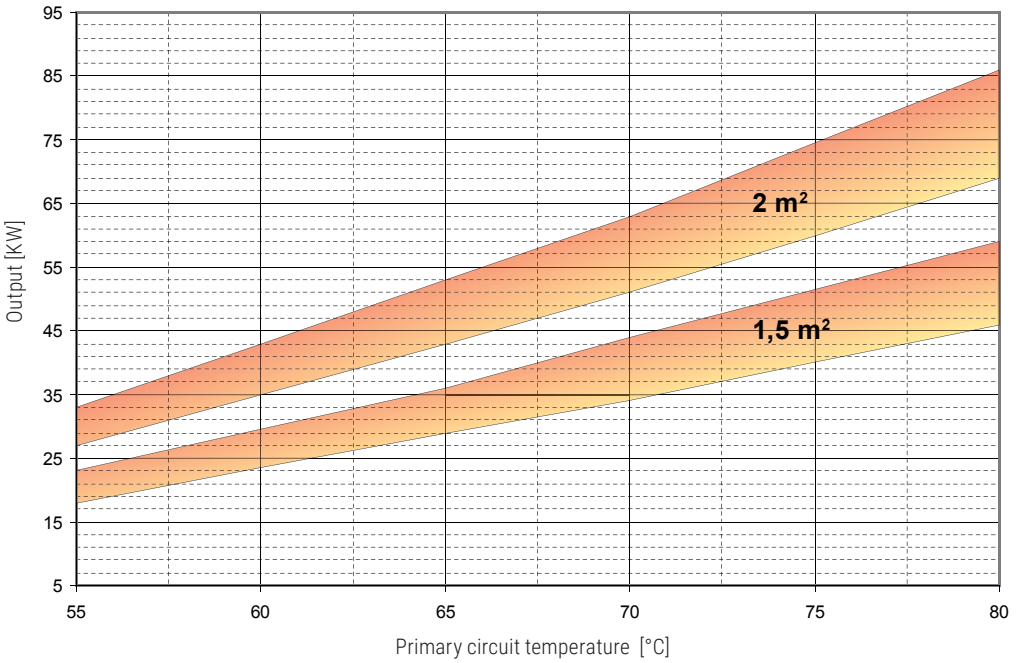



EXTRA

Heat exchanger surface	1,5 m²		2 m²	
Flow rate [m³/h]	MAX	MIN	MAX	MIN
	6	3	10	5

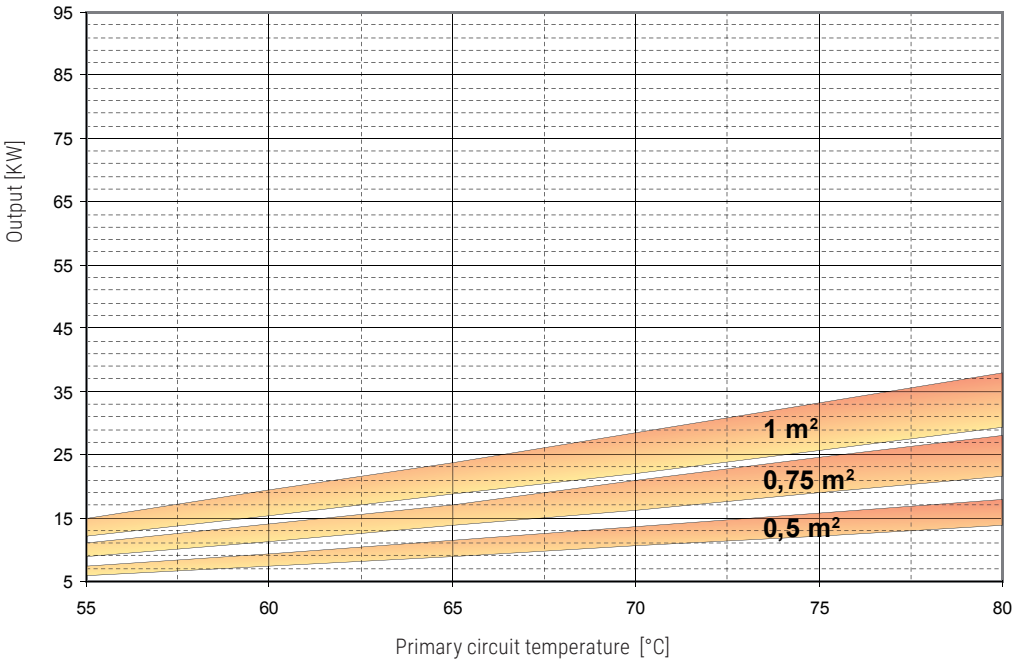



EXTRA

Heat exchanger surface	0,5 m²		0,75 m²		1 m²	
Flow rate [m³/h]	MAX	MIN	MAX	MIN	MAX	MIN
	2	1	3	1,5	4	2

HEAT EXCHANGER OUTPUT CHARTS

EXTRA HEAT EXCHANGER OUTPUT REFERRED TO TEMPERATURE AND FLOW RATE OF PRIMARY CIRCUIT AND WITH SECONDARY AT 10/45°C AT MAXIMUM WITHDRAWAL OF PRODUCIBLE DHW (UPPER LIMIT OF THE CURVES REFERRED TO MAXIMUM PRIMARY FLOW RATE IN THE HEAT EXCHANGER, WHILE THE LOWER LIMIT IN THE CURVES REFER TO THE MINIMUM PRIMARY FLOW RATE)

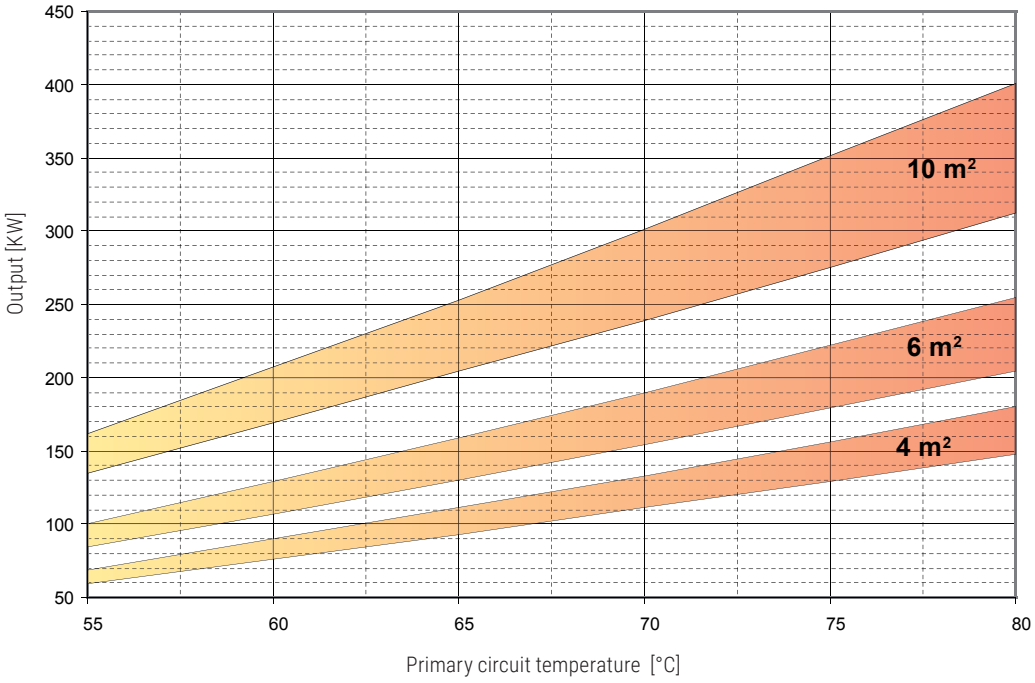



EXTRA

Heat exchanger surface	4 m²		6 m²		10 m²	
Flow rate [m³/h]	MAX	MIN	MAX	MIN	MAX	MIN
	20	10	20	10	20	10

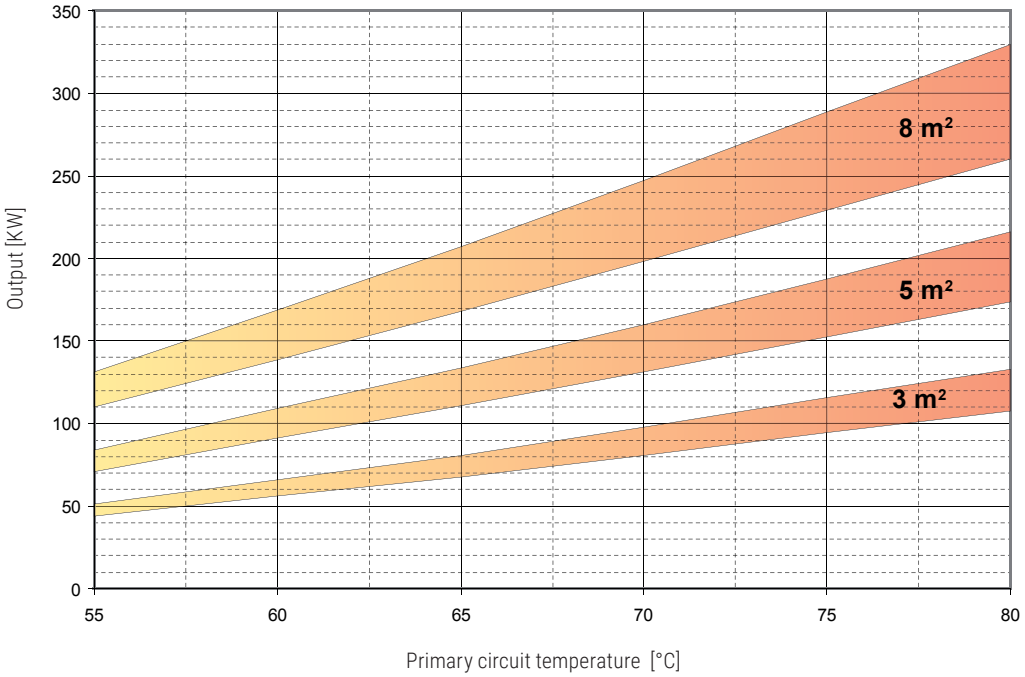



EXTRA

Heat exchanger surface	3 m²		5 m²		8 m²	
Flow rate [m³/h]	MAX	MIN	MAX	MIN	MAX	MIN
	15	7,5	20	10	20	10

HEAT EXCHANGER OUTPUT CHARTS

BOLLY® 1 ST HEAT EXCHANGER OUTPUT REFERRED TO TEMPERATURE AND FLOW RATE OF PRIMARY CIRCUIT AND WITH SECONDARY AT 10/45°C AT MAXIMUM WITHDRAWAL OF PRODUCIBLE DHW (UPPER LIMIT OF THE CURVES REFERRED TO MAXIMUM PRIMARY FLOW RATE IN THE HEAT EXCHANGER, WHILE THE LOWER LIMIT IN THE CURVES REFER TO THE MINIMUM PRIMARY FLOW RATE)

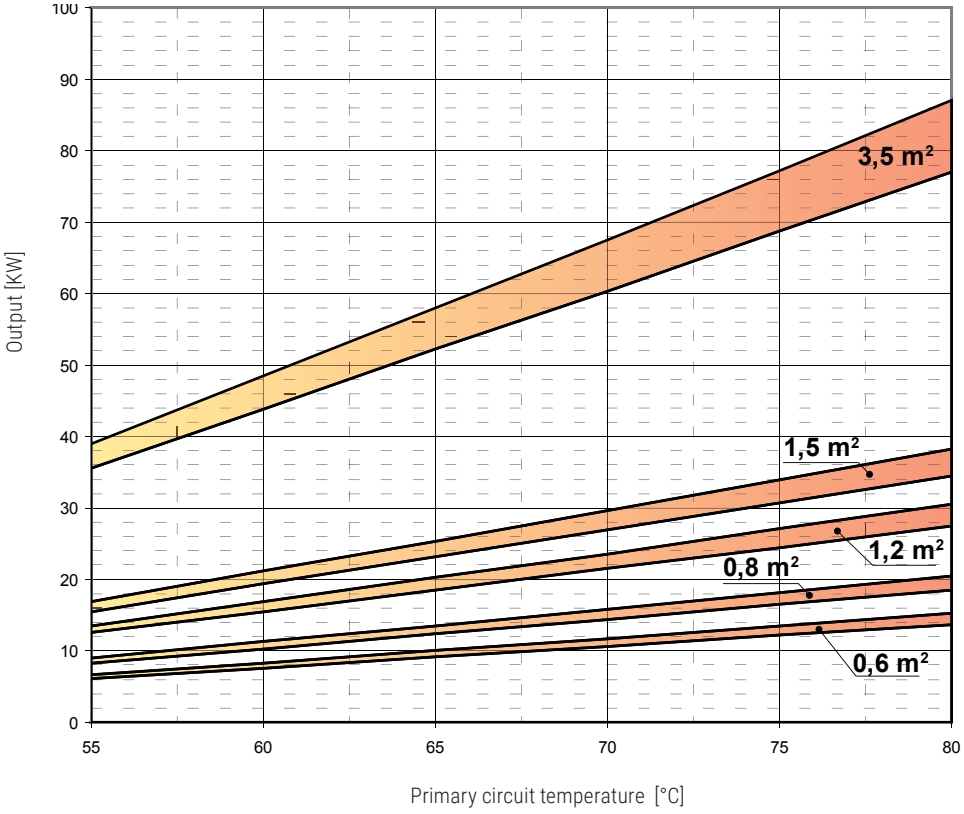

BOLLY® 1 ST

Heat exchanger surface	0,6 m²		0,8 m²		1,2 m²		15 m²		3,5 m²	
Flow rate [m³/h]	MAX	MIN	MAX	MIN	MAX	MIN	MAX	MIN	MAX	MIN
	2	1	2,5	1,25	3	1,5	3,5	1,75	6	3

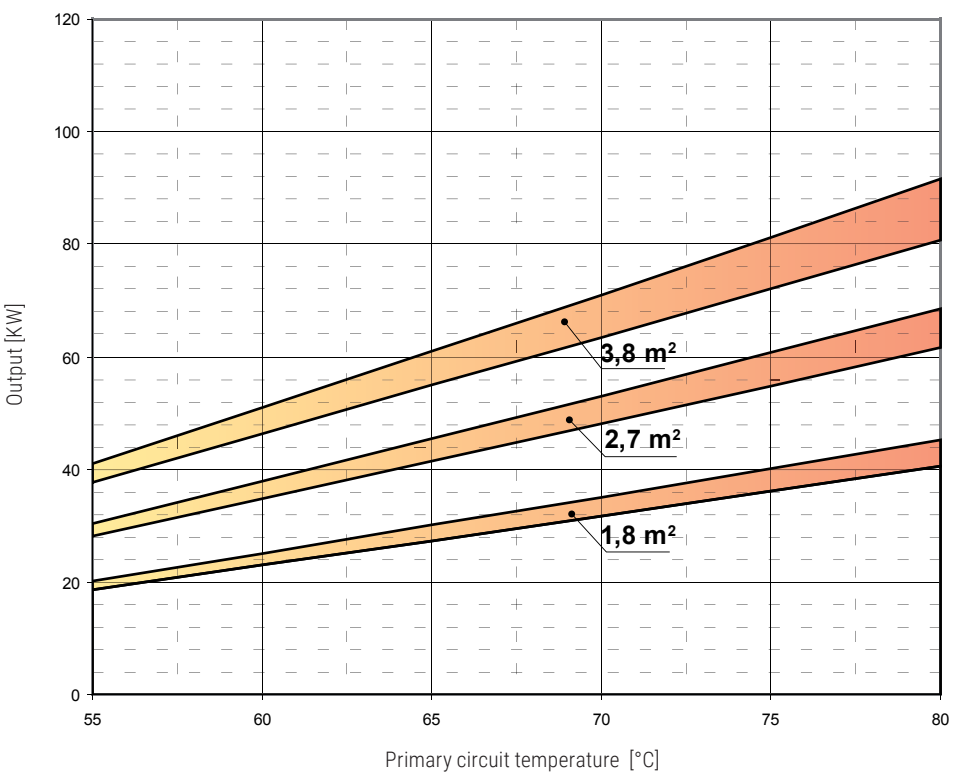

BOLLY® 1 ST

Heat exchanger surface	1,8 m²		2,7 m²		3,7 m²	
Flow rate [m³/h]	MAX	MIN	MAX	MIN	MAX	MIN
	3,50	1,75	6	3	6	3

HEAT EXCHANGER OUTPUT CHARTS

BOLLY® 2 ST HEAT EXCHANGER OUTPUT REFERRED TO TEMPERATURE AND FLOW RATE OF PRIMARY CIRCUIT AND WITH SECONDARY AT 10/45°C AT MAXIMUM WITHDRAWAL OF PRODUCIBLE DHW (UPPER LIMIT OF THE CURVES REFERRED TO MAXIMUM PRIMARY FLOW RATE IN THE HEAT EXCHANGER, WHILE THE LOWER LIMIT IN THE CURVES REFER TO THE MINIMUM PRIMARY FLOW RATE)

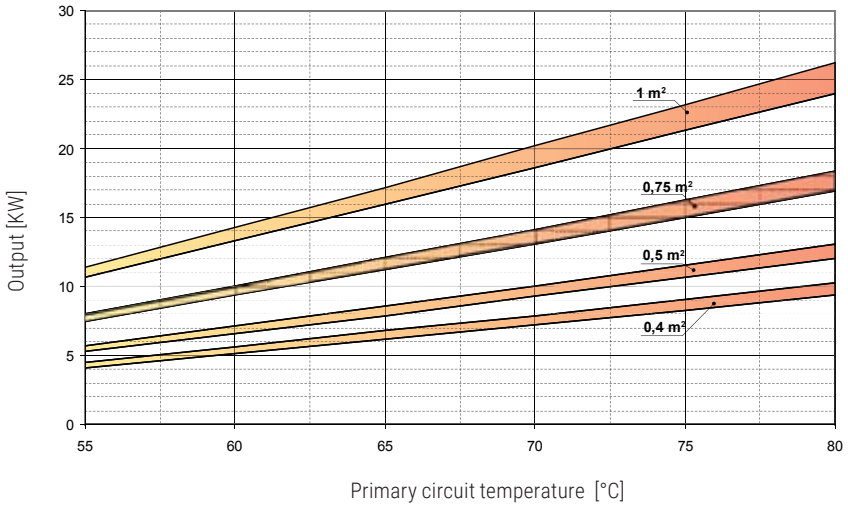

BOLLY® 2 ST

Heat exchanger surface	0,4 m²		0,5 m²		0,75 m²		1 m²	
	MAX	MIN	MAX	MIN	MAX	MIN	MAX	MIN
Flow rate [m³/h]	2	1	2,5	1,25	3	1,5	3,5	1,75

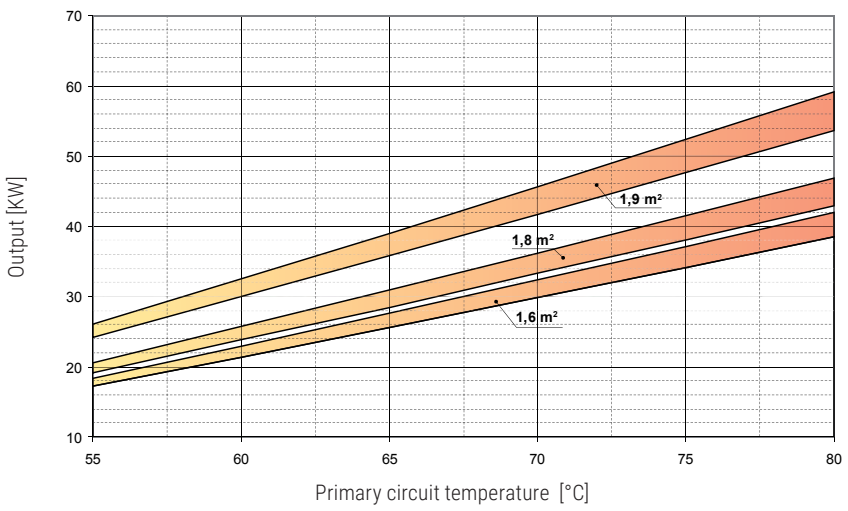

BOLLY® 2 ST

Heat exchanger surface	1,6 m²		1,8 m²		1,9 m²	
	MAX	MIN	MAX	MIN	MAX	MIN
Flow rate [m³/h]	6	3	6	3	6	3

FOR LOWER HEAT EXCHANGER OUTPUT CHARTS - SEE BOLLY® 1 ST

BOLLY® 1 AP HEAT EXCHANGER OUTPUT REFERRED TO TEMPERATURE AND FLOW RATE OF PRIMARY CIRCUIT AND WITH SECONDARY AT 10/45°C AT MAXIMUM WITHDRAWAL OF PRODUCIBLE DHW (UPPER LIMIT OF THE CURVES REFERRED TO MAXIMUM PRIMARY FLOW RATE IN THE HEAT EXCHANGER, WHILE THE LOWER LIMIT IN THE CURVES REFER TO THE MINIMUM PRIMARY FLOW RATE)

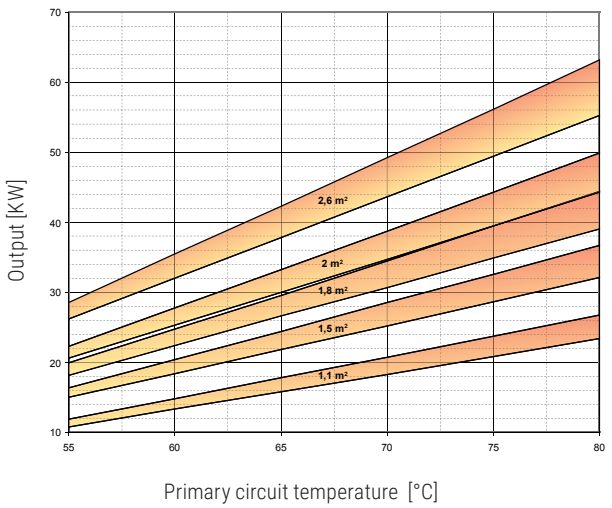

BOLLY® 1 AP

Heat exchanger surface	1,1 m²		1,5 m²		1,8 m²		2 m²		2,6 m²	
	MAX	MIN	MAX	MIN	MAX	MIN	MAX	MIN	MAX	MIN
Flow rate [m³/h]	2	1	2,5	1,25	3	1,5	3,5	1,75	3,5	1,75

HEAT EXCHANGER OUTPUT CHARTS

BOLLY® 2 AP HEAT EXCHANGER OUTPUT REFERRED TO TEMPERATURE AND FLOW RATE OF PRIMARY CIRCUIT AND WITH SECONDARY AT 10/45°C AT MAXIMUM WITHDRAWAL OF PRODUCIBLE DHW (UPPER LIMIT OF THE CURVES REFERRED TO MAXIMUM PRIMARY FLOW RATE IN THE HEAT EXCHANGER, WHILE THE LOWER LIMIT IN THE CURVES REFER TO THE MINIMUM PRIMARY FLOW RATE)

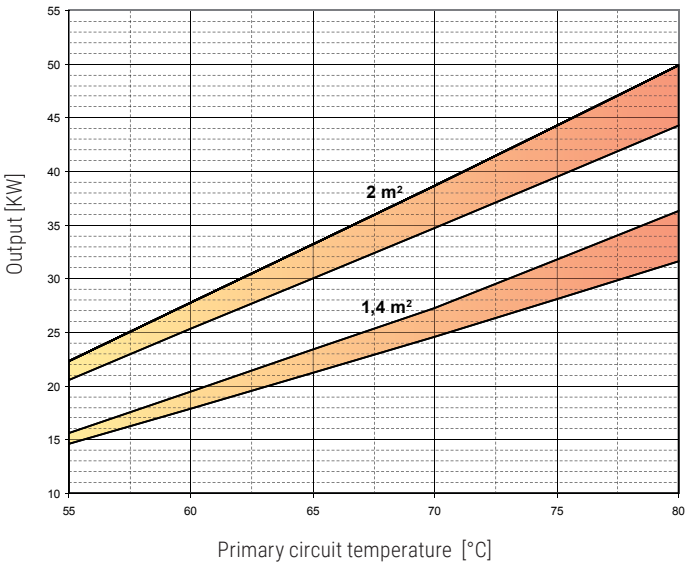

BOLLY® 2 AP

Heat exchanger surface	1,4 m²		2 m²	
Flow rate [m³/h]	MAX	MIN	MAX	MIN
	3	1,5	3,5	1,75

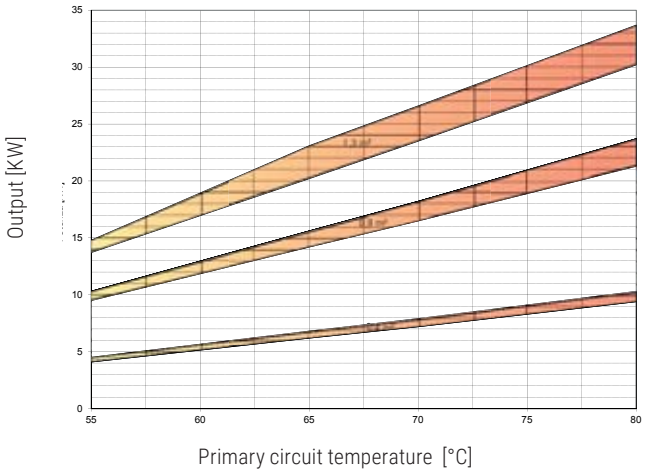

BOLLY® 2 AP

Heat exchanger surface	0,4 m²		0,9 m²		1,3 m²	
Flow rate [m³/h]	MAX	MIN	MAX	MIN	MAX	MIN
	2	1	3	1,5	3,5	1,75

BOLLY® 1 XL HEAT EXCHANGER OUTPUT REFERRED TO TEMPERATURE AND FLOW RATE OF PRIMARY CIRCUIT AND WITH SECONDARY AT 10/45°C AT MAXIMUM WITHDRAWAL OF PRODUCIBLE DHW (UPPER LIMIT OF THE CURVES REFERRED TO MAXIMUM PRIMARY FLOW RATE IN THE HEAT EXCHANGER, WHILE THE LOWER LIMIT IN THE CURVES REFER TO THE MINIMUM PRIMARY FLOW RATE)

BOLLY® 1 XL

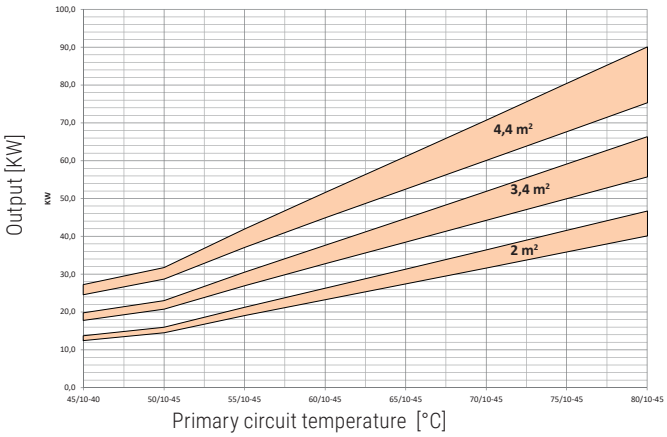

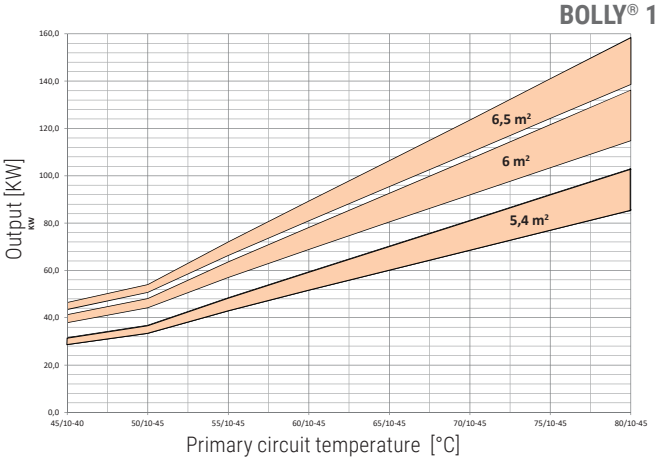

Heat exchanger surface	2 m²		3,4 m²		4,4 m²	
Flow rate [m³/h]	MAX	MIN	MAX	MIN	MAX	MIN
	2,5	1,25	3	1,5	3,5	1,75

Heat exchanger surface	5,4 m²		6 m²		6,5 m²	
Flow rate [m³/h]	MAX	MIN	MAX	MIN	MAX	MIN
	3,5	1,75	5	2,5	8	4

COMPANY CERTIFICATES


CERTIFICATO
CERTIFICATE
ANCCP Certification Agency
CERTIFICAZIONE DEL SISTEMA DI GESTIONE
CORDIVARI S.r.l.
UNI EN ISO 9001: 2015
www.anccp.it
anccp@anccp.it

Quality Certificate UNI EN ISO 9001


CERTIFICATO
Nr 50 100 4760 - Rev. 06
CORDIVARI S.r.l.
ZONA INDUSTRIALE PAGLIARE SNC
I-64020 MORRO D'ORO (TE)
UNI EN ISO 14001:2014
Progettazione e fabbricazione di radiatori, bollitori, recipienti a pressione, serbatoi, sistemi termici solari, canne fumarie, contenitori per alimenti attraverso i processi di stampaggio, taglio, zincatura a caldo, verniciatura a polvere e smaltatura. Zincatura a caldo conto terzi e trattamento rifiuti liquidi provenienti da altre sedi Cordivari (IAF 17, 18, 39)
Design and manufacture of heating radiators, unvented hot water cylinders, chimney pipes, pressurized cylinders, tanks, food containers and thermal solar systems with pressing processes, cutting, hot-working galvanization, powder paintings and enameling. Third party hot working galvanization and treatment of liquid waste coming from other Cordivari plants (IAF 17, 18, 39)
ACCREDIA
ZERTIFIKAT ◆ CERTIFICATE ◆ 证书 ◆ СЕРТИФИКАТ ◆ CERTIFICADO ◆ CERTIFICAT

Environmental managing System Certificate UNI EN ISO 14001:2004

Cordivari has always placed among its main goals:
The continuous improvement of the products manufactured;
The commitment to use low environmental impact materials that can be almost 100% recycled;
The achievement of the total quality
According to that, Cordivari has worked to obtain the most significant certifications that attest the commitment of the Company on the inside and outwards.

ITALIANS AND EUROPEAN LAWS AND REGULATIONS

Main laws and regulations concerning production and installation of pressurised tanks:

ErP Energy Related Products – Ecodesign Directive 2009/125/CE

UNI EN 12897:2016 - technical details for storage of sanitary hot water and indirect heating systems.

Disposals 2014/68/UE for pressurized equipment

DGLS 15 february 2016, n. 26 - Application of Directive 2014/68/UE Pressure Equipement.

Decrete 1/12/2004 n. 329 - Installation of equipment and pressurized ensemble.

Law January 9th 1991, n. 10 – National energy plan, for energy saving and energy development for renewable energy source

D.P.R. 26-8-1993 n. 412 – applying regulation law 10/91

D.L. 25/01/1992, n.108 – application of disposal n. 89/109/CEE concerning material and object destinated to get in touch with food products.

DPR 777 del 23/08/1982 - application of European Directive 76/893

D.M. 21/03/1973 – Decrete Law concening water for human consumption

D.M. 174 del 06/04/2004 Decrete Law concening water for human consumption

Disposals 2014/29/CE – air compressor tanks planning and production.

UNI CTI 8065 - Water Treatment

"Raccolta R ed. 2009 cap. R.1.A." - Expansion System



CE certification in accordance with 2014/68/UE Pressure Equipement regulations relevant to pressure vessels



CE certification in accordance with requirements of 2014/68/UE Pressure Equipement regulations for pressurized tanks (equipped pressure vessel)



CE certification in accordance with requirements of 2014/68/UE Pressure Equipement regulations for pressurized tanks (exchanging diaphragm pressure vessels).



Test certification of the silicone gaskets suitable for water intended for human consumption (tested according to 98/83/CE), max temperature up to 200°C.



SSICA

STAZIONE SPERIMENTALE PER L'INDUSTRIA DELLE CONSERVE ALIMENTARI IN PARMA

Parma, 15/11/2007

Rapporto di Prova N. 2734

Alla c.a. Dr. Fabrizio Marini
Spett.le
CORDIVARI S.r.l.
Zona Industriale Pagliare
64020 MORRO D'ORO (TE)

Data ricevimento: 29/10/07
Campione: **Provini di metallo**
Rif.: Lettera senza data
Campione prelevato dal cliente e pervenuto a mezzo corriere
Descrizione Campione: provini di metallo protetti con "rivestimento Polywarm-evo grigio" destinato ad essere utilizzato negli impianti fissi di captazione, trattamento, adduzione e distribuzione delle acque destinate al consumo umano.
Data inizio prove: 07/11/07 **Data termine prove:** 09/11/07

Prove svolte	Metodo	Unità di misura	Valore	Limite di legge
Mg globale (mg/kg) in acqua distillata a 40°C/10d	D.M. 6/04/2004 n.174	mg/kg	1,2	Max 60
Magnesio colorante da globale	D.M.21/3/73 Allegato IV Sez. T	%	≤60	non inferiore a 99

N.B.:rapporto superficie esposta (cm²) e volume del simulante (ml) = 1
Valore limite previsto dal Decreto Ministeriale del 6 aprile 2004, n. 174.

Il Responsabile del Laboratorio

LA DIREZIONE
Dott.ssa Luciana Bolzoni

I risultati riportati nel rapporto di prova si riferiscono esclusivamente al campione esaminato.
Il presente rapporto di prova non può essere riprodotto parzialmente senza approvazione della SSICA

Test report of internal treatment for food use Polywarm® in accordance with D.M. nr. 174 del 06/04/2004 granted by SSICA Laboratory of Parma - Italy.



WRAS

Water Regulations Advisory Scheme

Our Ref: HL/M130106
Test Report: M005452

27th June 2013

Cordivari Srl
Zi Pagliare – 64020 Morro D'oro (Teramo),
Italy

WATER REGULATIONS ADVISORY SCHEME (WRAS)
MATERIAL APPROVAL

The material referred to in this letter is suitable for contact with wholesome water for domestic purposes having met the requirements of BS 6920-1:2000 "Suitability of non-metallic products for use in contact with water intended for human consumption with regard to their effect on the quality of the water".

The reference relates solely to its effect on the quality of the water with which it may come into contact and does not signify the approval of its mechanical or physical properties for any use.

FACTORY APPLIED PIPE & FITTING COATINGS **5030**

Polywarm. Factory applied, brown coloured enamel coating. Apply as per manufacturer's instructions. Cure for 20 minutes at 240°C. For use with water up to 85°C.

This material is only approved for the curing conditions that appear on the approval. If the cure conditions are varied from those specified on the approval then the material is not covered by the scope of the approval.

APPROVAL NUMBER: 1302537
APPROVAL HOLDER: CORDIVARI SRL

The Scheme reserves the right to review approval. This approval is valid between February 2013 and February 2018.

An entry, as above, will accordingly be included in the 'Water Fittings Directory on-line under the section headed, "Materials which have passed full tests of effect on water quality".

The Directory may be found at: www.wras.co.uk/directory

Yours faithfully

Jason Purnell
Approvals & Enquiries Manager
Water Regulations Advisory Scheme

WRAS -Water Regulation Advisory Scheme certificate for Polywarm® coating



ofi

CORDIVARI s.r.l
Zona Industriale Pagliare
IT – 64020 MORRO D'ORO (TE)

PRÜFZEUGNIS

(Verlängerung von Prüfzeugnis 407.873/2)

basierend auf **DVGW ARBEITSBLATT W 270**

„Vermehrung von Mikroorganismen auf Werkstoffen für den Trinkwasserbereich – Prüfung und Bewertung; Ausgabe 2007"

Hersteller: CORDIVARI s.r.l
Produkt(e): Prüfplatten
Werkstofftype: POLYWARM
Prüfzeitraum: 2012-08-04 bis 2012-09-06
Prüfauftrag: 1702027 / 2090 / 1H

Gemäß OFI Prüfbericht Nr. 407.873/2 vom 2012-05-08 wurden die o.g. Werkstoffe allen in der DVGW Arbeitsblatt W 270 vorgesehenen Prüfungen unterzogen.

Das Material mit der Bezeichnung

„ POLYWARM "

ist aufgrund der Ergebnisse der vorgenommenen Prüfung (OFI Prüfbericht Nr. 407.873/2 vom 2012-05-08) unter der Voraussetzung einer den Vorgaben des Herstellers entsprechenden ordnungsgemäßen Verarbeitung in mikrobiologischer Hinsicht für den Einsatz im Trinkwasserkontakt geeignet.

Die **Gültigkeit dieses Prüfzeugnisses** endet mit **2022-09-14 und ist nicht mehr verlängerbar** – dies unter der Voraussetzung, dass sich keine Veränderungen in der Ausführung, im Werkstoff u/o im Herstellverfahren ergeben, die von den üblichen prozessinternen Einstellungen und Anpassungen abweichen, auch im Falle einer Änderung relevanter gesetzlicher u/o normativer Bestimmungen, die eine neuerliche Beurteilung des Werkstoffes erforderlich machen, verliert das Prüfzeugnis seine Gültigkeit.

Wien, 2017-06-23

Dr. Christoph Winter
Prüfleiter Trinkwasserkontaktmaterialien

Certificate of Conformity for Polywarm® according to DVGW W270.



NARODOWY INSTYTUT ZDROWIA PUBLICZNEGO
- Państwowy Zakład Higieny

Zakład Bezpieczeństwa Zdrowotnego Środowiska

ATEST HIGIENICZNY BK/W/1199/01/2018
HYGIENIC CERTIFICATE ORIGINAL
NATIONAL INSTITUTE OF PUBLIC HEALTH – NATIONAL INSTITUTE OF HYGIENE

Wyrób / product: **POLYWARM - powłoka do podgrzewaczy ciepłej wody - nazwy handlowe: Bolty 1/2/XL/Murale/PDC, Extra 1/2/3, Vaso inerziale**

Zawierający / containing: wkładki ceramiczne

Przeznaczony do / destined: stosowania w zbiornikach urządzeń służących do podgrzewania i magazynowania ciepłej wody

Wymieniony wyżej produkt odpowiada wymaganiom higienicznym przy spełnieniu następujących warunków / the above-named product is acceptable according to hygienic criteria with the following conditions:
Atest higieniczny nie dotyczy parametrów technicznych i walorów użytkowych wyrobów/ Hygienic certificate does not apply to technical parameters and utility value

Wytwórca / producer:
Cordivari Srl
Z.I. Pagliare
64020 Morro d' Oro (TE), Włochy

Niniejszy dokument wydano na wniosek / this certificate issued for:
Cordivari Srl
Z.I. Pagliare
64020 Morro d' Oro (TE), Włochy

Atest może być anulowany lub unieważniony po przedstawieniu stosownych dowodów przez Wnioskodawcę słronę, Ważności atestu traci wadność po 2022-01-31 lub w przypadku zmian w receptorze albo w technologii wytwarzania wyrobu.

The certificate may be corrected or cancelled after appropriate motivation. The certificate loses its validity after 2022-01-31 or in the case of changes in composition or in technology of production.

Data wydania atestu higienicznego: 31 stycznia 2018
The date of issue of the certificate: 31st January 2018

Kontakt w sprawie niniejszego atestu higienicznego / To contact regarding this hygienic certificate:
Zakład Bezpieczeństwa Zdrowotnego Środowiska / Department of Environmental Health and Safety

Certificate of Conformity for Polywarm® according to NIZP - National Institute of Public Healt - Poland .



POLITECNICO DI MILANO

Dipartimento di Energia

RELAB- Renewable Heating and Cooling LAB

5. RISULTATI DELLE PROVE ED EVENTUALI OSSERVAZIONI SUL FUNZIONAMENTO DELLE UNITA' SOTTOPOSTE A PROVA

RISULTATI TEST EN 16147: 2011			
	Data test	15/07/2015	
Quantità misurata		Valore	Unità di misura
Tempo di riscaldamento	t_h	04.52.57	hh:mm:ss
Energia di riscaldamento assorbita	W_{eh}	2,48	kWh
Durata di un ciclo di attivazione-disattivazione	t_{on}	19.14.48	hh:mm:ss
Energia assorbita durante l'ultimo ciclo di attivazione-disattivazione	W_{on}	0,49	kWh
Potenza assorbita in standby	P_{sb}	25,69	W
Prestazioni			
Classe del ciclo di spillamento		L	
Energia termica utile PdC	Q_{TC}	11,67	kWh
Periodo di tempo ciclo di prova	t_{TC}	35:55:49	hh:mm:ss
Consumo energia elettrica per l'intero ciclo di prelievo	$W_{EL,H,TC}$	4,05	kWh
En. termica calcolata prodotta tramite elettricità	$Q_{EL,TC}$	0,18	kWh
Consumo totale energia elettrica per un ciclo di prelievo	$W_{EL,TC}$	3,92	kWh
Coefficiente di prestazione	COP_{DHW}	2,98	-
Temperatura di riferimento dell'acqua calda	T_{tap}	47,48	°C
Volume max acqua calda utilizzabile	V_{max}	208,15	l
Campo di esercizio			
Temp. minima fonte di calore		-	°C
Temp. minima acqua calda sanitaria		-	°C
Temp. massima fonte di calore		-	°C
Temp. massima acqua calda sanitaria		-	°C

Rapporto di Prova: ENE-RE-C1015-RP-01 Pagina 9 di 10

Laboratorio RELAB – Politecnico di Milano – Dipartimento di Energia

Via R. Lambruschini 4 - 20156 - Milano - tel. 02 2399 3835 – fax 02 2399 3868

BOLLYTHERM® HP calorifier with heat pump performance test granted by RELAB Energy Department (Politecnico of Milan) according to EN-16147 related to Ecodesign ErP Directive 2009/125/CE – EU Regulation 812/2013-814/2013.



Report nr. 15057MAL-07CM272

IMQ CLIMA

IMQ CLIMA

Centro di Innovazione Tecnologica Agemont S.p.A.

Assago, 27/08/2015

Test report n° 15057MAL-07CM272
MULTIFUNCTION ROOM
Performance test

Date of reception of the unit: 02/07/2015
Date of test: from 07/08/2015 to 11/08/2015

DATA OF THE TESTED UNIT

- Customer: CORDIVARI S.r.l. Zona Industriale Pagliare 64020 Morro d'Oro (TE)
- Test unit/model: Bollyterm HP VT V14
- Serial number: BTHP 1063
- Voltage: 230 [V]
- Frequency: 50 [Hz]
- Power Source: Single-Phase
- Refrigerant type: R134A
- Mass of refrigerant: 0,80 kg
- Required Tapping cycle L

The tests are performed in accordance with the requirements of EN 16147: 2011 – *Heat pumps with electrically driven compressors. Tacting and requirements for marking of domestic hot water units, Commission Delegated Regulation (EU) No. 812/2013* and of *Commission Regulation (EU) No. 814/2013.*

The results presented in this report are valid only for the tested unit.

Executed by:	Approved by:
Lab Technician	Technical Manager
Ing Nicola Di Maria	Ing. Andrea Mazzolini

Note: This report consists of 11 pages.
The tested unit has been chosen by the customer/manufacturer.
Any reproduction of this report must contain all pages. The reproduction of this report must be authorized by IMQ CLIMA Centro di Innovazione Tecnologica Agemont S.p.A.

IMQ CLIMA Centro di Innovazione Tecnologica Agemont S.p.A.
Company managed and coordinated by IMQ S.p.A.
Via J. Linussio 1
33020 Amaro (UD) - Italy
Tel. +39 0433 485807
Fax +39 0433 489240

page 1 of 11

BOLLYTHERM® HP calorifier with heat pump performance test granted by IMQ CLIMA (Centro di Innovazione Tecnologica Agemont) according to EN-16147 related to Ecodesign ErP Directive 2009/125/CE – EU Regulation 812/2013-814/2013.



TÜV Rheinland Energie und Umwelt GmbH
Test Centre for Energy Appliances

TÜVRheinland®
Precisely Right.

Valutazione di un dispositivo di controllo di prova per il collaudo di bollitori acqua calda in conformità alla EN 15332: 2007

Produttore / Appaltatore: Cordivari S.r.l. Zona Industriale Pagliare I-64020 Morro D'Oro

Prodotto: *Dispositivo di prova per la determinazione delle caratteristiche tecniche di bollitori acqua calda presso la sede di Morro D'Oro*

Motivo della prova: Convalida del dispositivo costruito conformemente a:

EN 15332: 2007, Valutazione energetica di bollitori acqua calda relativamente agli articoli:

5.1 Collegamento del serbatoio di accumulo
5.4 Misurazione della dispersione in stand-by

Risultato della prova: Il risultato della presente prova si basa sull'Audit del 20 agosto 2015. Il Dispositivo di prova presentato risponde ai requisiti degli articoli 5.1 e 5.4 dello standard di collaudo di cui sopra.

Nota: La validità della relazione di collaudo è di 2 anni. La capacità di misurazione deve essere approvata ogni due anni presso Cordivari S.r.l nella sede di Morro D'Oro da parte di TÜV Rheinland.

Colonia, 10.09.2015
432/mc

Test Centre for Energy Appliances
DIN- und DVGW-Laboratory

Inspector: Dipl.-Ing. M. Cocarelli

Deputy Head of Test Centre: Dipl.-Ing. H. Verbert

TÜV Rheinland test report about the quality of tests performed in "CORDIVARI LAB.



CORDIVARI Lab

CORDIVARI S.r.l.
Zona Industriale Pagliare – 64020 MORRO D'ORO (TE) Italia
Tel. +39 085 80.40.1 r.a. - Fax UFF: COMM: +39 085 80.41.418 - Fax CENTR. +39 085 8041280
C.F. - P. IVA - REG. IMPRESE TE N. IT 00735570673 - R.E.A. TE N. 92310 – CAP. SOC. €.4.000.000,00 i.v.
www.cordivari.it – info@cordivari.it

RAPPORTO DI PROVA

VERIFICA DISPERSIONE TERMICA AI FINI DELL'ETICHETTATURA ENERGETICA PREVISTA DAL REGOLAMENTO (UE) N. 814/2013 DELLA COMMISSIONE DEL 2 AGOSTO 2013 RECANTE MODALITÀ DI APPLICAZIONE DELLA DIRETTIVA 2009/125/CE DEL PARLAMENTO EUROPEO E DEL CONSIGLIO IN MERITO ALLE SPECIFICHE PER LA PROGETTAZIONE ECOCOMPATIBILE DEGLI SCALDACQUA E DEI SERBATOI PER L'ACQUA CALDA.

Rapporto di prova n°	**BO-CLEN 02.15**
Data di emissione	**21/08/2015**
N° di pagine totale	**7**
Laboratorio di prova	**Cordivari LAB**
Nome del richiedente	Cordivari srl
Specifiche di prova	EN15332:2007 5.4
Scopo della prova	Determinare la dispersione termica nelle condizioni previste dalla norma al fine di caratterizzare il prodotto oggetto della prova nell'ambito delle classi energetiche previste dal Regolamento UE 814/2013
Descrizione dell'oggetto in prova	Bollitore (preparatore di acqua calda ad uso igienico sanitario) ad accumulo con scambiatore di calore interno fisso. Materiale del corpo e dello scambiatore: acciaio al carbonio. Esecuzione cilindrico verticale, trattamento anticorrosivo delle membrature a contatto con l'acqua sanitaria e coibentazione in schiuma di poliuretano espanso realizzata " di corpo" sul bollitore.
Marchio	CORDIVARI
Costruttore	Cordivari SRL
Indirizzo costruttore	Zona Industriale Pagliare 64020 Morro D'Oro (TE) Italia
Modello	BOLLY 1 ST 200
Data del ricevimento oggetto in prova	06/08/2015
Periodo di prova	Dal 19 al 21 AGOSTO 2015

Questo rapporto non può essere riprodotto, se non integralmente, senza l'autorizzazione del laboratorio di prova che lo rilascia. I risultati esposti in questo rapporto di prova si riferiscono esclusivamente all'oggetto testato. Cordivari LAB non assume nessuna responsabilità per danni derivanti dall'interpretazione dei dati del presente documento riprodotto al di fuori del suo contesto.

0 Revisione	*P.I. Giovanni D'Egidio EsecuzioneTest*	*Ing. Ivan Boldini Direzione Tecnica*

BOLLY® test report granted by "CORDIVARI LAB" according to EN-15332 related to Ecodesign ErP Directive 2009/125/CE.

GENERAL SALES CONDITIONS AND WARRANTY

Sales of Cordivari Srl products are made in accordance with the below listed General Conditions of Sale and Guarantee. Any exception to these conditions is subject to written acceptance by Cordivari Srl.

1. SHIPMENT
The goods travel at the risk of the Customer, even if they are delivered at destination. The goods must be checked in the presence of the carrier at the time of delivery, verifying the integrity of the packaging, missing or wrongly shipped items. Any dispute must be immediately reported to the carrier / courier signing the transport document with reserve and confirming this reserve by registered letter within three days from reception of the goods. (Failure to observe this clause will release transport company and Cordivari srl from any liability).

2. DELIVERY TERMS
The delivery terms are approximate and if the proposed delivery time cannot be respected for any reason, the Customer will not be entitled to demand any compensation, penalty payments, cancellation or modification to the order given. In the event of extraordinary events such as natural disasters, strikes, lack of raw materials and force majeure, Cordivari srl reserves the right to choose the measures to be taken. If the ordered goods are not collected within the agreed terms, they will be invoiced and stored with costs, risks and risks for the customer.

3. WEIGHTS, MEASURES, SURFACES
Weights, measures, surfaces, shapes, illustrations, images and other data in this catalog or on the products are for illustrative purposes only and are not binding. Cordivari Srl reserves the right to make modifications or variations to its products without prior notice. Always refer to the technical documentation attached to the product and official certificates.

4. ORDER CANCELLATION OR MODIFICATION
Without the written consent of Cordivari Srl, the orders cannot be canceled or modified neither partially nor totally. No changes or modifications are agreed when the production has already begun. Any costs resulting from the cancellation or modification of the order will be invoiced to the customer.

5. WARRANTY:
For all 316 L stainless steel calorifiers, Cordivari Srl guarantees 5 years. For Bolly PRIMO series calorifiers, Cordivari guarantees 2 years.
For all calorifiers with internal anti-corrosion treatment in Polywarm®, Cordivari Srl guarantees 5 years.
For all tanks with anticorrosive hot galvanizing treatment, Cordivari Srl guarantees 2 years.
For all the extractable exchangers and plate exchangers (inspectable and brazed), both mounted on the kettles and sold individually, Cordivari Srl guarantees 2 years.
For all PUFFER and MULTIFUEL CYLINDERS buffer tanks, Cordivari Srl guarantees 5 years.
For accessories and residual items in this catalog not covered by the general sales conditions, Cordivari Srl guarantees 2 years, with the exception of technical, electrical and electronic components, where the warranty is 12 months.
For all non-standard items, special products made to customer specifications, Cordivari Srl guarantees 2 years.
The products and systems featured in this catalog are designed and manufactured in compliance with the reference directives CE-EN-UNI-and PED. The guarantee and conformity of these products and systems are only valid in those countries where these standards are recognized and accepted. In non-European countries or in countries that do not comply with these rules, Cordivari assumes no responsibility for warranty or compliance.
The warranty covers manufacturing defects. It expires if the points of Article 5 are not respected. The warranty is valid only if the installation of the products has complied with the criteria of protection against overpressure, corrosion, legionella and the installation and use rules and requirements described in this catalog and any other relevant standard regarding system engineering. In the domestic hot water production systems, as well as in the heating ones, comply with the provisions of the UNI CTI 8065 standard which provides for various types of water treatments depending on its characteristics. The warranty does not cover damage resulting from failure to comply with the requirements of the UNI CTI 8065 standard.
The commitment to provide the warranty terms is valid only provided that:
The product has been stored in good condition and protected from the weather before installation;
The product has not been damaged during transport, handling or installation;
No tampering or repairs have been carried out by persons not authorized by Cordivari Srl;
The installation has been carried out by authorized personnel, in compliance with the instructions and the standards indicated in the technical documentation supplied by Cordivari Srl and with the installation and use rules and instructions given in this catalog and that any provisions of laws or specific technical standards have been observed;
The accessories and spare parts used are those regularly supplied by Cordivari Srl;
The buyer has made the balance of payments in the pre-established terms;
No aggressive chemicals have been added to the water;
The operating pressure and temperature indicated in the catalog correspond to the pressure and the limit temperature of use.
Any parts subject to natural wear and tear (eg anodes, gaskets, bolts, etc.) are always excluded from any warranty.
The warranty starts from the date of the sales invoice of Cordivari Srl and is not renewed in any case in the event of a product replacement.
The warranty does not cover costs due to demolitions, work for the passage of products both inbound and outbound and labor for any product replacements.
During the warranty period, Cordivari Srl undertakes to replace the product that has been recognized as defective due to proven manufacturing defects, in addition to this, the Customer cannot claim any other compensation for direct or indirect damage costs of any nature to persons and / or things arising from these defects.

6. PAYMENTS
The payments of the invoices must be made within the established deadlines. The delay in the payment of the invoices, even if partial, gives rise to interest on arrears to the extent of the current rate, in addition to the immediate suspension of the shipments in progress.

7. RETENTION OF TITLE
Until the customer has paid the final price of the delivered goods, the products remain property of Cordivari srl. In the event of the buyer's non-fulfillment, even partial, Cordivari Srl may request the immediate return of the goods, withholding in any case the installments paid as compensation, without prejudice to greater damages.

8. PRICES
Prices are not binding and can be changed without notice. Prices can be reviewed based on the variations that may occur up to the time of delivery.
Prices are intended for delivery FCA Morro D'Oro (TE), unless otherwise agreed.
Prices are always shown in the price list, excluding VAT.
For bulky models Cordivari Srl reserves the right to request a participation in the packaging costs.

9. ORDERS/DELIVERY
The minimum order value is 2.000 €. The confirmed orders definitively commit the Customer who must declare to know and accept all the conditions of sale. If the Customer draws up the order by name and on behalf and in the name of others, with the signing of the order he undertakes the fulfillment of what he has agreed. Delivery is intended exclusively at the Customer's headquarters / warehouse.
Special requests of the Customer such as: express deliveries, delivery other than the office / warehouse, etc. will have additional costs that will be communicated from time to time to our sales office.

10. COURT AUTHORITY
For the present Catalogue and conditions only the provisions of Italian law will be used. For controversy, the Court of Teramo (Italy) shall have exclusive competence. Essential and trial law shall be exclusively Italian.

11. ORIGINAL VERSION
Translation of Cordivari General Sales Conditions and Warranty Terms, reported in this page, derives from the Italian version. In case of possible controversy, the official Cordivari General Sales Conditions and Warranty Terms are the one reported in the Italian language, stated at the back of the Italian catalogues.

©Copyright Cordivari Srl
All rights, in particular those of reproduction, dissemination and translation are reserved.
No part of this work may be reprinted or reproduced in any other form without the written permission of Cordivari.
This catalog replaces and cancels all previous editions.
The company reserves the right to modify the products and data shown in the catalog at any time and is not responsible for any typographical errors.

Le vendite dei prodotti della Cordivari Srl sono effettuate conformemente alle sottoelencate Condizioni Generali di Vendita e Garanzia. Ogni deroga a queste condizioni è subordinata all'accettazione scritta da parte della Cordivari Srl.

1. Spedizione
La merce viaggia a rischio e pericolo del Committente, anche se viene spedita franco destino. La merce deve essere verificata all'atto della consegna, controllando l'integrità dell'imballo, articoli mancanti o sostituzioni in presenza del trasportatore. Ogni contestazione dovrà essere segnalata immediatamente al trasportatore/corriere firmando con riserva il DDT e confermando tale riserva a mezzo lettera raccomandata o posta certificata entro tre giorni dal ricevimento merce.

2. Termini di Consegna
I termini di consegna si intendono puramente indicativi e comunque se il termine di consegna non potesse essere rispettato per qualsiasi motivo, il Committente non avrà diritto a esigere alcun indennizzo, pagamenti di penali, annullamento o modifica all'ordine conferitoci. In caso di eventi straordinari quali calamità naturali, scioperi, mancanza di materie prime e cause di forza maggiore, la Cordivari Srl si riserva la scelta delle misure da adottare. Se la merce ordinata non viene ritirata nel periodo concordato, questa verrà fatturata e immagazzinata con costi, rischio e pericolo a carico del Committente.

3. Pesi, misure, superfici
Pesi, misure, superfici, forme, dimensioni, immagini e altri dati sono indicativi e non impegnativi e possono subire delle modifiche o variazioni che la Cordivari Srl si riserva di apportare ai suoi prodotti senza preavviso.

4. Annullamento o modifica ordine
Senza il consenso scritto della Cordivari Srl, le ordinazioni conferite non possono essere né parzialmente né totalmente annullate o modificate. Non si accordano variazioni o modifiche quando è già stata intrapresa la lavorazione. Eventuali spese derivanti dall'annullamento o modifica dell'ordine saranno fatturate al Committente.

5. Garanzia
Per tutti i bollitori in acciaio inox 316 L la Cordivari Srl garantisce anni 5. Per i bollitori della serie Bolly PRIMO la Cordivari garantisce 2 anni.
Per tutti i bollitori con trattamento anticorrosivo interno in Polywarm® la Cordivari Srl garantisce anni 5.
Per tutti recipienti con trattamento anticorrosivo di zincatura a caldo la Cordivari Srl garantisce anni 2.
Per tutti gli scambiatori di calore estraibili e a piastre (ispezionabili e saldobrasati), sia montati sui bollitori sia venduti singolarmente la Cordivari Srl garantisce anni 2.
Per tutti i termoaccumulatori PUFFER e TERMOACCUMULATORI COMBINATI la Cordivari Srl garantisce anni 5.
Per gli accessori e per gli articoli residuali del presente catalogo non contemplati nelle condizioni generali di vendita la Cordivari Srl garantisce anni 2 ad eccezione di componenti tecnici, elettrici ed elettronici, dove la garanzia è di 12 mesi.
Per tutti gli articoli fuori standard, i prodotti speciali realizzati su specifica del Cliente, la Cordivari Srl garantisce anni 2.
I prodotti ed i sistemi presenti in questo catalogo sono progettati e realizzati in conformità alle direttive di riferimento CE-EN-UNI-e PED. La garanzia e la conformità di detti prodotti e sistemi hanno valenza esclusivamente in quei paesi dove tali norme sono riconosciute e recepite. In paesi extra-europei o comunque in paesi che non recepiscono tali norme la Cordivari non assume responsabilità per garanzia e conformità.
La garanzia copre i difetti di fabbricazione. Essa decade se non vengono rispettati i punti dell'art.5. Sussiste a condizione che l'installazione dei prodotti abbia rispettato i criteri della protezione dalla sovrappressione, corrosione, legionella e norme e prescrizioni di installazione e utilizzo descritte nel presente catalogo e tutte le eventuali norme in materia impiantistica.
Negli impianti di produzione di acqua calda sanitaria, così come in quelli di riscaldamento, attenersi, ai fini della garanzia, a quanto disposto dalla norma UNI CTI 8065 che prevede vari tipi di trattamenti dell'acqua in funzione delle sue caratteristiche. La garanzia non copre danni derivanti da inadempienze alle prescrizioni della norma UNI CTI 8065.
L'impegno di prestare la garanzia sussiste a condizione che:
Il prodotto sia stato immagazzinato in buone condizioni e al riparo dalle intemperie prima dell'installazione;
Il prodotto non abbia subito danneggiamenti durante il trasporto, le movimentazioni o l'installazione;
Non siano state compiute manomissioni o riparazioni da persone non autorizzate dalla Cordivari Srl;
L'installazione sia stata realizzata da personale autorizzato, in conformità alle istruzioni e alle norme indicate sulla documentazione tecnica fornita dalla Cordivari Srl e alle norme e prescrizioni di installazione e utilizzo riportate nel presente catalogo e che siano state rispettate eventuali disposizioni di leggi o norme tecniche specifiche;
Gli accessori e i ricambi utilizzati siano quelli regolarmente forniti dalla Cordivari Srl;
Il compratore abbia effettuato il saldo dei pagamenti nei termini prestabiliti;
Non siano state eseguite aggiunte di sostanze chimiche aggressive all'acqua;
La pressione e la temperatura di esercizio indicate sul catalogo corrispondano alla pressione e alla temperatura limite di utilizzo.
Sono esclusi sempre da qualsiasi garanzia quei particolari soggetti a naturale usura (es. anodi, guarnizioni, bulloni ecc.).
La garanzia decorre dalla data della fattura di vendita della Cordivari Srl e non si rinnova in alcun caso nell'eventualità di una sostituzione del prodotto.
La garanzia non copre costi dovuti a demolizioni, lavori per il passaggio dei prodotti sia in ingresso che in uscita e la manodopera per eventuali sostituzioni di prodotto.
Cordivari Srl si impegna durante il periodo di garanzia alla sostituzione del prodotto reso riconosciuto difettoso per accertatati difetti di produzione, oltre a ciò il Committente non potrà vantare alcun altro risarcimento per spese di danno, diretti o indiretti di qualsiasi natura a persone e/o a cose derivanti da detti difetti.

6. Pagamenti
I pagamenti delle fatture relative alle forniture dovranno essere effettuati entro i termini di scadenza stabiliti. Il ritardo nel pagamento delle fatture, anche se parziale, dà luogo alla decorrenza degli interessi di mora nella misura del tasso corrente, oltre alla sospensione immediata delle spedizioni in corso e del processamento di eventuali ordini.

7. Riserva di proprietà
I prodotti restano di proprietà della Cordivari Srl fino al pagamento dell'l'ultima rata di prezzo di merce consegnata. In caso di inadempimento anche parziale del compratore la Cordivari Srl potrà chiedere l'immediata restituzione della merce trattenendo comunque le rate pagate a titolo di indennità salvo il maggior danno.

8. Prezzi
I prezzi non sono impegnativi e possono essere modificati senza preavviso. I prezzi sono revisionabili in funzione delle variazioni che dovessero intervenire fino al momento della consegna.
I prezzi si intendono resa franco stabilimento di Morro D'Oro (TE), salvo diversi accordi.
I prezzi sono sempre riportati nel listino al netto di IVA.
Per modelli ingombranti la Cordivari Srl si riserva di chiedere una partecipazione alle spese di imballaggio e trasporto.

9. Ordini/Consegna
Il valore minimo per ordine è di Euro 2000. Gli ordini impartiti impegnano definitivamente il Committente che deve dichiarare di conoscere e accettare tutte le condizioni di vendita. Nel caso in cui il Committente rediga l'ordine per nome e per conto e in nome di altri, con la firma dell'ordine si impegna in solido all'adempimento di quanto da egli convenuto. La consegna si intende esclusivamente presso la sede/magazzino del Committente. Richieste particolari del Committente come: consegne espresso, consegna diversa dalla sede/magazzino, etc. avranno costi addizionali che verranno comunicati di volta in volta al nostro ufficio commerciale.

10. Foro competente
Foro Competente. Per qualsiasi controversia derivante dal presente contratto o collegata allo stesso è competente il Foro di Teramo.

Copyright Cordivari Srl
Tutti i diritti, in particolare quelli di riproduzione, diffusione e traduzione sono riservati.
Nessuna parte di questa opera può essere ristampata o riprodotta in qualsiasi altra forma senza l'autorizzazione scritta della Cordivari.
Il presente catalogo sostituisce ed annulla tutte le edizioni precedenti.
La società si riserva la facoltà di modificare in qualsiasi momento i prodotti e i dati riportati a catalogo e non risponde degli eventuali errori tipografici.

CORDIVARI S.r.l. - Z. I. Pagliare 64020 Morro D'Oro (TE) - ITALY
C.F. Part.IVA e Reg.Imprese TE 00735570673
Cap.Soc. Euro 4.000.000,00 i.v.
Tel: +39 085 80.40.713 - Fax: +39 085 80.40.273

CALORIFIERS - PRESSURE TANKS

PRICE REQUEST

Mod. 03.10-E

Rev. 05
del 05/08/2011

DATE	
COMPANY NAME	

PRODUCT CATEGORY

- ☐ CALORIFIERS
- ☐ BUFFERS
- ☐ COMPRESSED AIR RECEIVERS
- ☐ CHILLED WATER TANK
- ☐ MULTI-HEAT ENERGY COMBI / ECO-COMBI
- ☐ D.H.W. ACCUMULATION TANK
- ☐ INERTIAL TANK NO PED

DESCRIPTION

TECHNICAL DETAILS	
CAPACITY [lt]	
DIAMETER [mm]	
HEIGHT [mm]	
VERTICAL	
HORIZONTAL	
POLYWARM®	
STAINLESS STEEL	
PRESSURE	TEMPERATURE
SECONDARY SYSTEM (SANITARY)	
LIQUID	PRESSURE
PRIMARY SYSTEM (HEATING)	
LIQUID	PRESSURE

QUANTITY

INSULATION

REMARKS

DRAWING

©COPYRIGHT: This form cannot not be forwarded of reproduced without written authorization issued by Cordivari Srl

FOLLOW US

www.cordivari.com

CORDIVARI SRL
Z. I. Pagliare 64020 Morro D'Oro (TE) • Italy | F.C. / VAT. e Reg. Imp. TE 00735570673 | Capitale Sociale Euro 4.000.000,00 i.v
Tel: +39 085 80.40.1 | Fax: +39 085 80.40.273 | export@cordivari.it | www.cordivari.com | UNI EN ISO 9001 | UNI EN ISO 14001